(12) INTERNATIONAL APPLICATION PUBLISHED UNDER THE PATENT COOPERATION TREATY (PCT)

(19) World Intellectual Property Organization
International Bureau

(43) International Publication Date
13 February 2003 (13.02.2003)

PCT

(10) International Publication Number
WO 03/011389 A3

(51) International Patent Classification[7]: A61N 1/37, 1/368

(21) International Application Number: PCT/US02/19742

(22) International Filing Date: 19 June 2002 (19.06.2002)

(25) Filing Language: English

(26) Publication Language: English

(30) Priority Data:
09/918,225 30 July 2001 (30.07.2001) US

(71) Applicant: MEDTRONIC,INC. [US/US]; LC 340, 710 Medtronic Parkway, Minneapolis, MN 55432 (US).

(72) Inventor: THOMPSON, David, L.; 14171 Alder Street Northwest, Andover, MN 55304 (US).

(74) Agents: WOLDE-MICHAEL, Girma et al.; 710 Medtronic Parkway NE, Minneapolis, MN 55432-5601 (US).

(81) Designated States *(national)*: CA, JP.

(84) Designated States *(regional)*: European patent (AT, BE, CH, CY, DE, DK, ES, FI, FR, GB, GR, IE, IT, LU, MC, NL, PT, SE, TR).

Published:
— *with international search report*

(88) Date of publication of the international search report:
1 May 2003

For two-letter codes and other abbreviations, refer to the "Guidance Notes on Codes and Abbreviations" appearing at the beginning of each regular issue of the PCT Gazette.

(54) Title: PACING CHANNEL ISOLATION IN MULTI-SITE CARDIAC PACING SYSTEMS

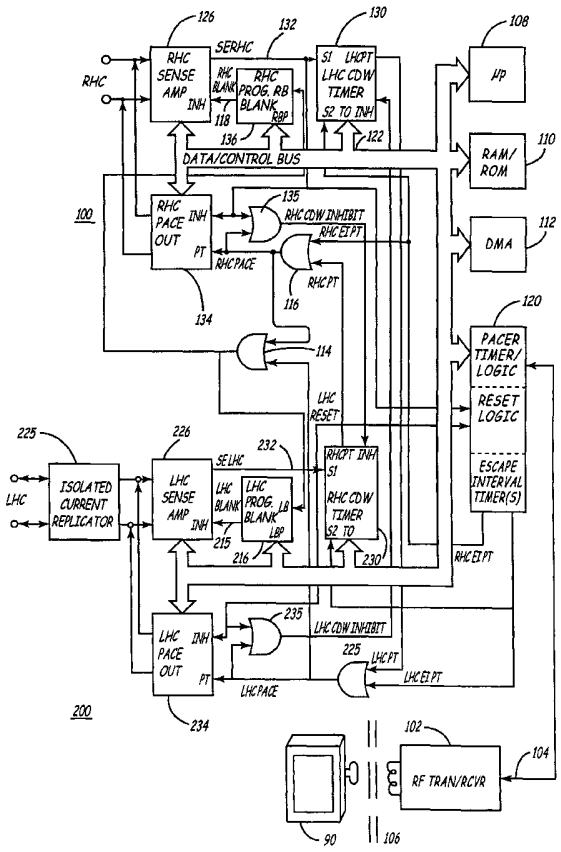

(57) Abstract: Cardiac pacing systems are disclosed for providing multi-site pacing in a single heart chamber or multi-chamber pacing in two or more heart chambers employing N pacing channels and miniaturized electrical isolation circuitry in up to N-1 pacing channels to minimize the effects of leakage currents generated during delivery of a pacing pulse in any one pacing channel from affecting sense amplifiers in the other pacing channels. Isolation of a the pace/sense electrodes from leakage currents is effected employing monolithic isolation circuit means. An isolated current replicator employing giant magnetoresistive (GMR) sense elements in conjunction with isolated planar cells fabricated in monolithic form is incorporated into conventional VLSI circuitry. Or, the monolithic isolation circuit means is formed of a micro-mechanical fabricated (MEMS) isolation transformer comprising low-loss input and output coils separated by an insulation layer that isolates the input coil from the output coil.

WO 03/011389 A3

INTERNATIONAL SEARCH REPORT

International Application No
PCT/US 02/19742

A. CLASSIFICATION OF SUBJECT MATTER
IPC 7 A61N1/37 A61N1/368

According to International Patent Classification (IPC) or to both national classification and IPC

B. FIELDS SEARCHED

Minimum documentation searched (classification system followed by classification symbols)
IPC 7 A61N

Documentation searched other than minimum documentation to the extent that such documents are included in the fields searched

Electronic data base consulted during the international search (name of data base and, where practical, search terms used)

EPO-Internal

C. DOCUMENTS CONSIDERED TO BE RELEVANT

Category °	Citation of document, with indication, where appropriate, of the relevant passages	Relevant to claim No.
A	WO 99 55415 A (MEDTRONIC INC) 4 November 1999 (1999-11-04) the whole document	1
A	US 5 836 981 A (CHANG STEVE ET AL) 17 November 1998 (1998-11-17) the whole document	1
A	US 4 830 006 A (BAKER JR ROSS G ET AL) 16 May 1989 (1989-05-16) the whole document	1
A	US 6 087 882 A (CHEN BAOXING ET AL) 11 July 2000 (2000-07-11) the whole document	1

-/--

[X] Further documents are listed in the continuation of box C.

[X] Patent family members are listed in annex.

° Special categories of cited documents :

"A" document defining the general state of the art which is not considered to be of particular relevance

"E" earlier document but published on or after the international filing date

"L" document which may throw doubts on priority claim(s) or which is cited to establish the publication date of another citation or other special reason (as specified)

"O" document referring to an oral disclosure, use, exhibition or other means

"P" document published prior to the international filing date but later than the priority date claimed

"T" later document published after the international filing date or priority date and not in conflict with the application but cited to understand the principle or theory underlying the invention

"X" document of particular relevance; the claimed invention cannot be considered novel or cannot be considered to involve an inventive step when the document is taken alone

"Y" document of particular relevance; the claimed invention cannot be considered to involve an inventive step when the document is combined with one or more other such documents, such combination being obvious to a person skilled in the art.

"&" document member of the same patent family

Date of the actual completion of the international search	Date of mailing of the international search report
24 January 2003	30/01/2003

Name and mailing address of the ISA	Authorized officer
European Patent Office, P.B. 5818 Patentlaan 2 NL – 2280 HV Rijswijk Tel. (+31–70) 340–2040, Tx. 31 651 epo nl, Fax: (+31–70) 340–3016	Ferrigno, A

Form PCT/ISA/210 (second sheet) (July 1992)

INTERNATIONAL SEARCH REPORT

Int nal Application No
PCT/US 02/19742

C.(Continuation) DOCUMENTS CONSIDERED TO BE RELEVANT

Category °	Citation of document, with indication,where appropriate, of the relevant passages	Relevant to claim No.
A	US 6 101 417 A (MCNEIL II KEN ET AL) 8 August 2000 (2000-08-08) the whole document	1

Form PCT/ISA/210 (continuation of second sheet) (July 1992)

INTERNATIONAL SEARCH REPORT

Information on patent family members

International Application No
PCT/US 02/19742

Patent document cited in search report	Publication date	Patent family member(s)	Publication date
WO 9955415 A	04-11-1999	US 6122545 A	19-09-2000
		EP 1075308 A1	14-02-2001
		WO 9955415 A1	04-11-1999
		US 6081748 A	27-06-2000
		US 6070101 A	30-05-2000
US 5836981 A	17-11-1998	NONE	
US 4830006 A	16-05-1989	BR 8703038 A	08-03-1988
		CA 1299252 A1	21-04-1992
		DE 3789036 D1	24-03-1994
		DE 3789036 T2	18-08-1994
		EP 0253505 A2	20-01-1988
		JP 2683770 B2	03-12-1997
		JP 63005763 A	11-01-1988
US 6087882 A	11-07-2000	NONE	
US 6101417 A	08-08-2000	NONE	