Dec. 30, 1924. 1,520,905

J. W. LAUREN

WIRE OR ROD ROLLING MACHINE

Filed July 13, 1922 3 Sheets-Sheet 1

Fig. 1

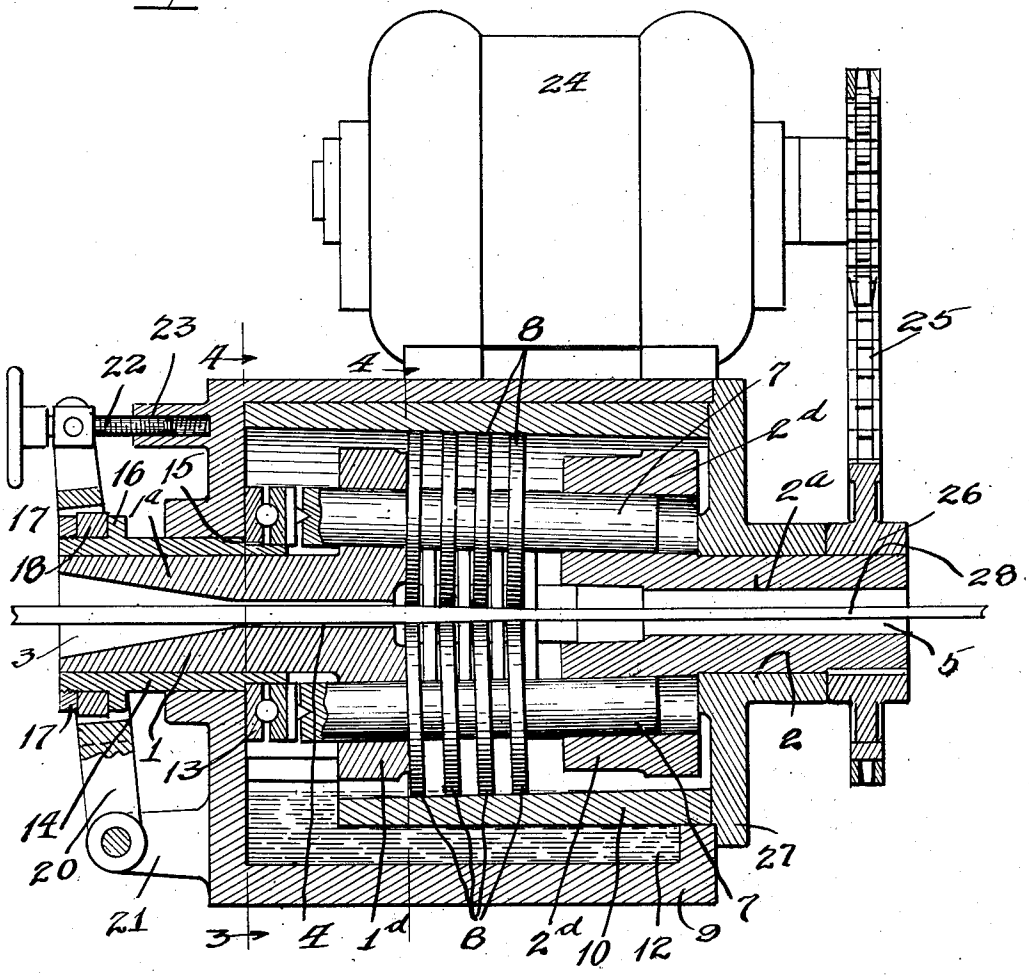

Witnesses
J. W. Angell
Carl E. Hill

Inventor
John W. Lauren.
by Charles W. Hills. Atty.

Dec. 30, 1924. 1,520,905

J. W. LAUREN

WIRE OR ROD ROLLING MACHINE

Filed July 13, 1922 3 Sheets-Sheet 2

Fig. 2

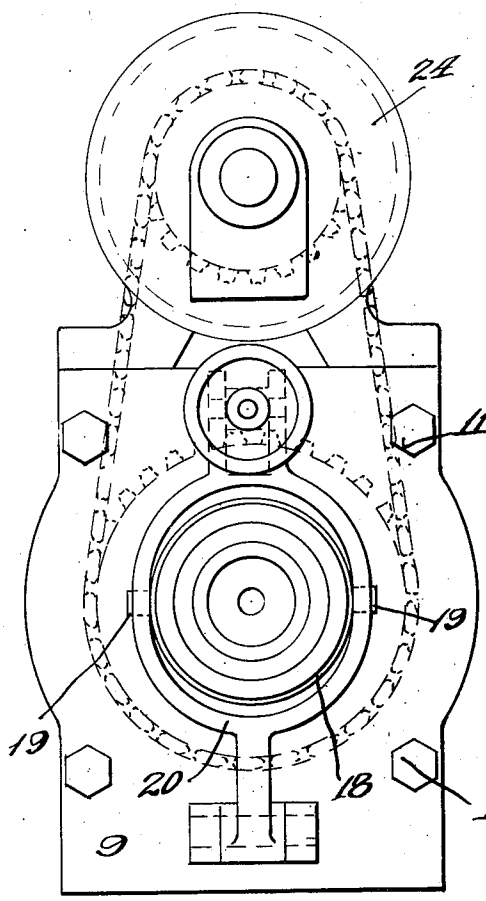

Fig. 3

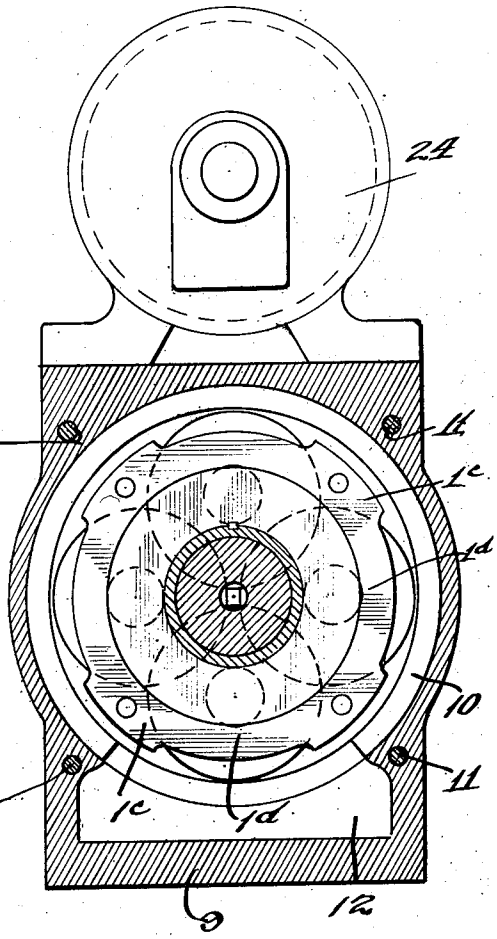

Witnesses
J. W. Angell
Carleton Hill

Inventor
John W. Lauren
by Charles W. Hills Atty

Dec. 30, 1924. 1,520,905

J. W. LAUREN

WIRE OR ROD ROLLING MACHINE

Filed July 13, 1922 3 Sheets-Sheet 3

Fig. 4

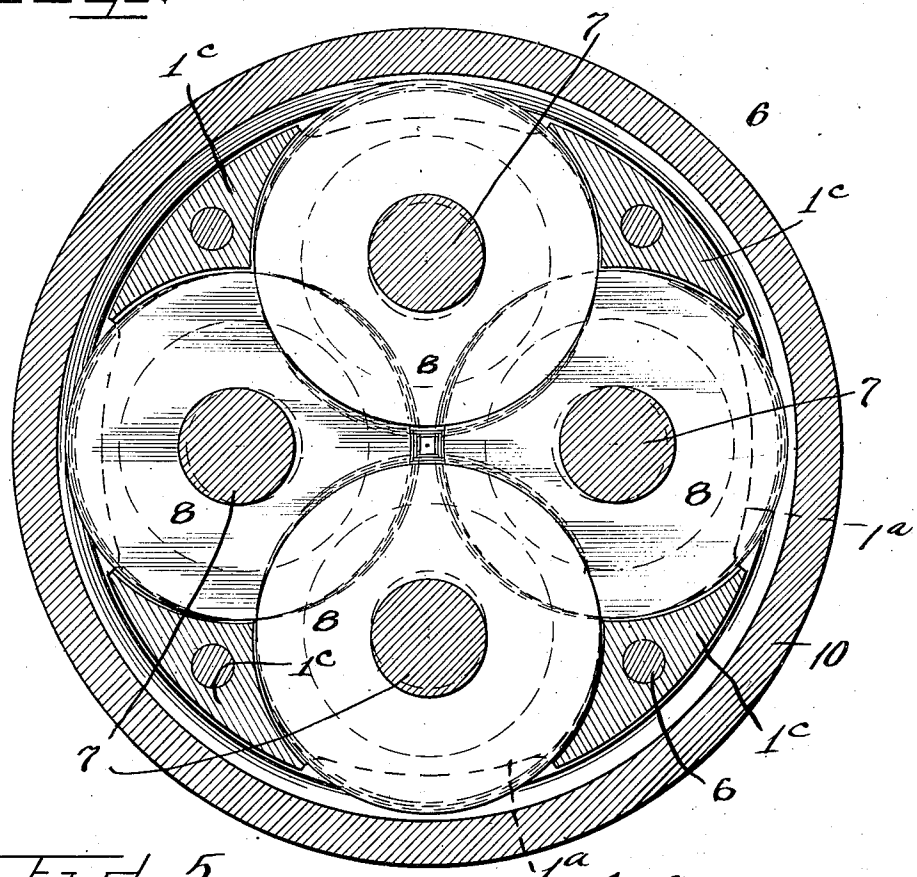

Fig. 5

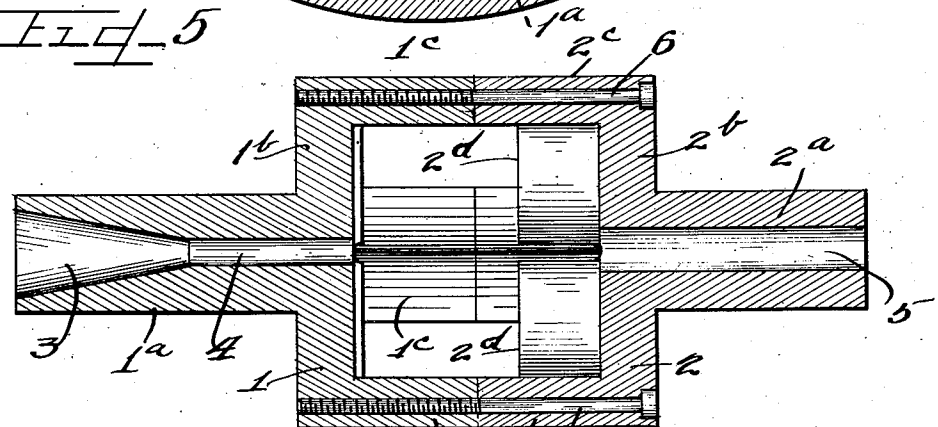

Witnesses

J. W. Angell

Carlton Hill

Inventor

John W. Lauren

by Chas. W. Hills Atty.

Patented Dec. 30, 1924. 1,520,905

UNITED STATES PATENT OFFICE.

JOHN W. LAUREN, OF STERLING, ILLINOIS.

WIRE OR ROD ROLLING MACHINE.

Application filed July 13, 1922. Serial No. 574,640.

To all whom it may concern:

Be it known that I, JOHN W. LAUREN, a citizen of the Republic of Finland, and a resident of the city of Sterling, in the county of Whiteside and State of Illinois, have invented certain new and useful Improvements in a Wire or Rod Rolling Machine; and I do hereby declare that the following is a full, clear, and exact description of the same, reference being had to the accompanying drawings, and to the numerals of reference marked thereon, which form a part of this specification.

It is an object of this invention to provide a machine having a rotor carrying a plurality of rotatable co-operating elements so arranged as to define a tapering way therebetween through which the wire is adapted to travel, be reduced in size and rolled into form.

It is a further object of this invention to provide for the adjustment of the machine for rolling wire or rods of varying diameters.

With these and other objects in view, which will become more apparent in the following description and disclosures, this invention comprises the novel mechanism and combinations hereinafter described and more particularly pointed out and defined in the appended claims.

In the accompanying drawings, which illustrate a preferred embodiment of this invention, and in which similar reference numerals refer to similar features in the different views:

Figure 1 is a central section through the machine with the operating motor in elevation.

Figure 2 is a front elevational view of the machine.

Figure 3 is a section on the line 3—3 of Figure 1 showing parts in elevation.

Figure 4 is an enlarged transverse sectional view through the rotor and tapering bushing.

Figure 5 is a longitudinal section through the rotor upon a reduced scale.

As shown on the drawings:

In the illustrated embodiment of this invention, there is shown a spider comprising a pair of sections 1 and 2. The section 1 is provided with an extended journal bearing 1^a in which an axial and conical opening or aperture 3 extends which merges into a cylindrical bore 4 opening interiorly of the spider, and a radially extending flange 1^b, having a plurality, four in the present instance, of equally spaced and longitudinally extending abutments 1^c, reversed, curved or beveled upon their lower surfaces. The portions 1^d of the flange intermediate the abutments 1^c are provided with bearing apertures concentrically arranged with respect to the axis of the cylindrical bore 4, the axis of said apertures converging rearwardly.

The spider section 2 is provided with a journal bearing 2^a having an axial cylindrical aperture 5 extending therethrough, and a radial flange 2^b having a plurality, four in the present instance, of equally spaced and longitudinally extending abutments 2^c reversely curved or beveled upon their lower surfaces. The portions 2^d intermediate the abutments 2^c are extended inwardly of the section and provided with bearing apertures concentrically arranged with respect to the axis of the cylindrical bore 5. The axis of the bearing apertures in the portions 2^d likewise converge rearwardly upon the same slope as the bearing apertures in the portions 1^d.

The spider sections 1 and 2 are adapted to be assembled by means of screw bolts 6 extending through the longitudinal abutments 1^c and 2^c. When so assembled, the axis of the bearing apertures in opposite intermediate portions 1^d and 2^d of the radial flanges are in axial alinement for rotatably supporting roller shafts 7, each of which has rigidly mounted thereon a plurality of circular disks or rolls 8. The rolls 8 on one pair of diametrically opposite shafts 7 are directly opposite or opposed to each other; the rolls 8 on the other pair of diametrically opposite shafts are likewise directly opposite or opposed to each other, but they are staggered in relation to the rolls of the first-mentioned pair of shafts, as shown in Figs. 1 and 4. As the axes of the bearing apertures for the shafts 7 converge, the shafts 7 will necessarily converge, and the diameters of

the rolls are all equal, a tapering way will be defined between the peripheries of the rolls in alinement with the bores 3 and 5 in the spider. The shafts 7 are freely slidable in these bearings and are designed so as to extend only partially in the rear bearings 2^d to allow for longitudinal adjustment for increasing or decreasing the tapering way between the rolls for rolling wire or rods of different diameters.

The spider with the four sets of rollers mounted therein constitutes a rotor which is rotatably mounted in a housing 9 by means of the journals 1^a and 2^a. A bushing or sleeve 10 having an inner tapering or converging surface corresponding to the convergence of the shafts 7 is mounted for free rotation within the housing 9.

The housing 9 is provided with a lubricant chamber 12 in the lower portion thereof which extends below the radius of the sleeve 10, and suitable grooves are formed in the sleeve 10 in order to admit lubricant within the interior of the sleeve for lubricating the rolls.

The front ends of the shafts 7 abut a ball thrust bearing 13 of any well-known design, mounted upon an adjustable sleeve 14 having an inner reduced end defining an annular shoulder 15 against which the outer thrust ring rests. The sleeve 14 extends through an aperture in the front wall of the housing 9 and forms a journal bearing for the journal 1^a of the rotor. The outer end of the sleeve 14 is provided with a groove formed by an annular shoulder 16 and a threaded collar 17 for receiving a ring 18 provided with a pair of diametrically opposite studs 19 upon which a yoke lever 20 is swiveled, the lower end of said yoke lever being pivoted upon a lug 21 and the upper end having a screw 22 rotatably anchored therein, which screw engages a threaded opening in a lug 23 projecting from the front of the housing. By rotating the screw 22, the sleeve 14 may be adjusted longitudinally on the journal 1^a carrying the end thrust bearing with it. By adjustably sliding the sleeve 14 inwardly, the shafts 7 will be shifted rearwardly thereby decreasing the size of the tapering way. A reverse adjustment will increase the tapering way, as is obvious.

The rotor is adapted to be rotated at a high rate of speed by means of a motor 24 mounted upon the housing and having a sprocket wheel on its shaft over which a sprocket chain 25 which drives a sprocket wheel 26 secured upon the end of the journal 2^a of the rotor which extends beyond the bearing boss of the cover plate 27 that closes the rear end of the housing 9, being secured thereto by bolts 11.

In the operation of this machine, the motor is started to rotate the rotor. When sufficient speed has been attained, the previously rolled rods or stock produced from billets are adapted to be finished in this machine. These rods are passed through the tapering way between the rolls of the revolving rotor, as shown in Fig. 1, in which a rod 28 is represented as passing therethrough. The rod is gradually reduced by the action of the rolls to the proper size desired according to the adjustment of the rolls. The tendency of the bar 28 to become locked between the rolls is overcome by the relative rotation of the rolls and rotor.

At the present time, it is contemplated that the machine to be used for rolling cold steel rods or the like which are usually pickled before rolling, but it is apparent that the machine is susceptible of rolling hot steel rods just as well.

It is characteristic of this invention that no dies are needed and that the wire or rods are not injured or distorted by the severe tensile pull unnecessary when the rods are drawn through dies. The machine may be readily designed to accomplish a reduction in one operation that takes several dies to accomplish; thus a great saving of labor and time is effected by this machine, and a better grade of article is produced.

I am aware that numerous details of construction may be varied through a wide range without departing from the principles of this invention, and I therefore do not purpose limiting the patent granted otherwise than necessitated by the prior art.

I claim as my invention:

1. In a machine of the class described, a spider, a plurality of shafts concentrically and convergingly arranged with respect to the axis of the spider and slidably mounted in said spider, rolls rigidly secured upon said shafts, and means for longitudinally shifting said shafts.

2. In a machine of the class described, a spider, a plurality of shafts convergingly arranged with respect to the axis of the spider and slidably journalled therein, disk rolls rigid with said shafts, means for supporting and rotating said spider and means for longitudinally adjusting said shafts.

3. In a wire rolling machine, a rotor, converging shafts slidably supported in said rotor, disk rolls on said shafts, means for longitudinally adjusting said shafts, and means for rotating said rotor.

4. In a wire drawing machine, a stationary housing having alined journal bearings, a rotor having end journals supported in said bearings, longitudinally adjustable shafts convergingly supported by said rotor, disk rolls upon said shafts and means for rotating said rotor.

5. In a machine of the class described, a rotor having a passage therethrough with

relatively rotatable elements concentrically arranged with respect to said passage and spaced circumferentially to define a way coaxial with said passage, said elements being convergingly arranged, and longitudinally adjustable for the purpose set forth.

In testimony whereof I have hereunto subscribed my name in the presence of two subscribing witnesses.

JOHN W. LAUREN.

Witnesses:
CARLTON HILL,
OSCAR HARTMANN.