United States Patent [19]

Eftefield

[11] **3,889,404**

[45] **June 17, 1975**

[54] **HOEING APRON MECHANISM**

[75] Inventor: **Larry G. Eftefield**, Joliet, Ill.

[73] Assignee: **Caterpillar Tractor Co.**, Peoria, Ill.

[22] Filed: **Sept. 20, 1973**

[21] Appl. No.: **398,989**

[52] **U.S. Cl.** ..... **37/126 AD**; 37/129

[51] **Int. Cl.** **E02f 3/62**; E02f 3/64

[58] **Field of Search**..... 37/124, 126 R, 126 A–E, 37/129, 4, 8

[56] **References Cited**

UNITED STATES PATENTS

2,795,872	6/1957	Wardle	37/4 X
3,063,173	11/1962	Wardle	37/4
3,221,424	12/1965	Hancock	37/4
3,471,952	10/1969	Peterson	37/126 X
3,589,242	6/1971	Peterson et al.	37/4 X
3,708,896	1/1973	Eftefield	37/4
3,762,076	10/1973	Eftefield	37/4

Primary Examiner—E. H. Eickholt

Attorney, Agent, or Firm—Phillips, Moore, Weissenberger Lempio & Strabala

[57] **ABSTRACT**

A scraper having a bowl with an open front end for receiving earth as the scraper travels along a work site is provided with a hoeing mechanism to assist the movement of earth up into the bowl. The hoeing mechanism has an apron extending transversely in the bowl and including rearwardly extending members at each side to pivotally connect with support arms which are in turn pivoted to the bowl sidewalls. Additional spaced apart couplings extend between the bowl sidewalls and the apron in an arrangement which imparts a preferred pattern of hoeing motion to the apron in response to sequential actuations of fluid motor means for shifting the apron vertically and horizontally.

8 Claims, 6 Drawing Figures

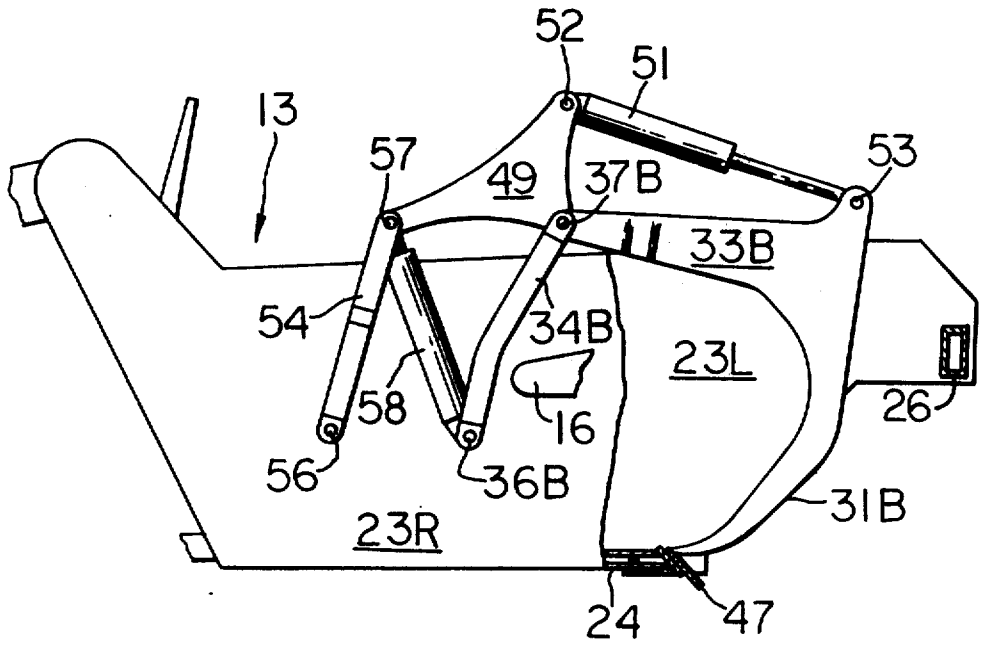

Fig_1

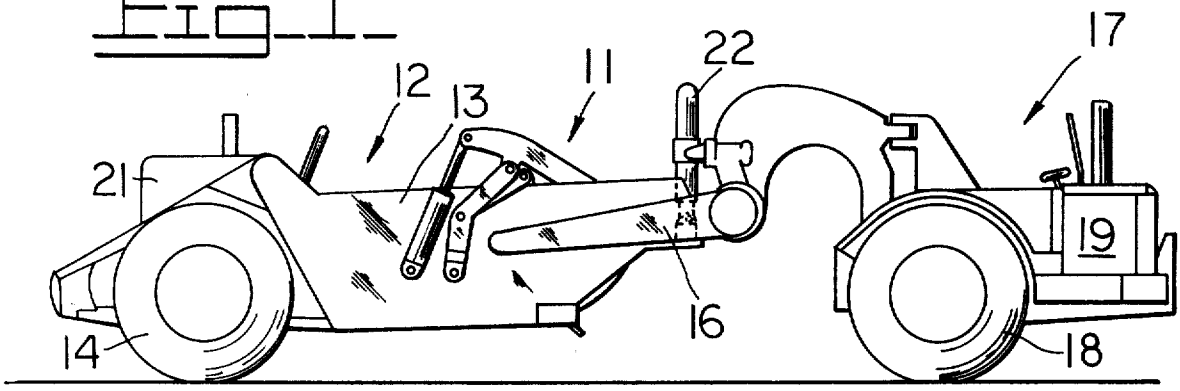
12
13
11
22
17
21
19
16
14
18

Fig_2

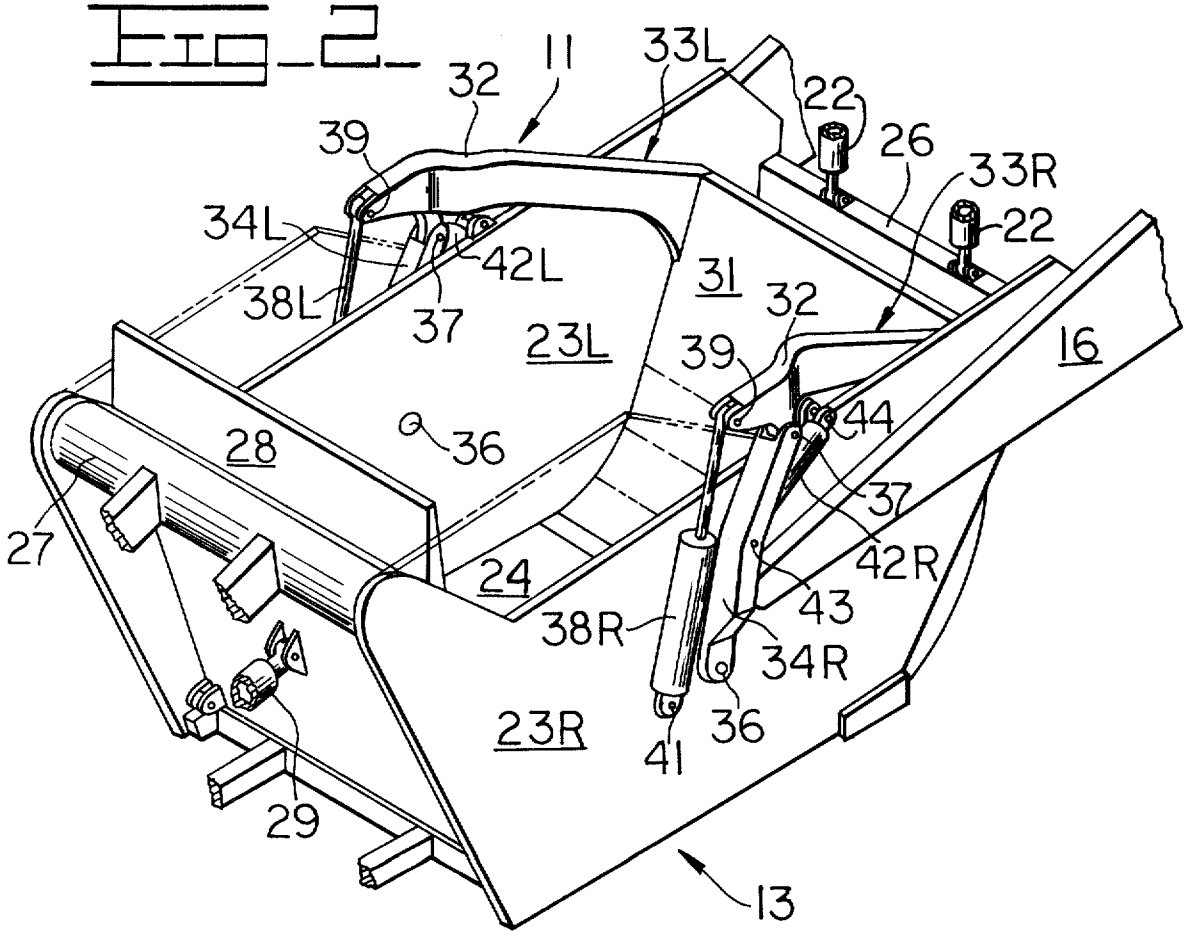
11
32
33L
22
39
26
33R
34L
42L
22
38L
37
31
32
23L
39
16
36
44
28
37
27
42R
24
43
38R
34R
23R
41
36
29
13

Fig_3_

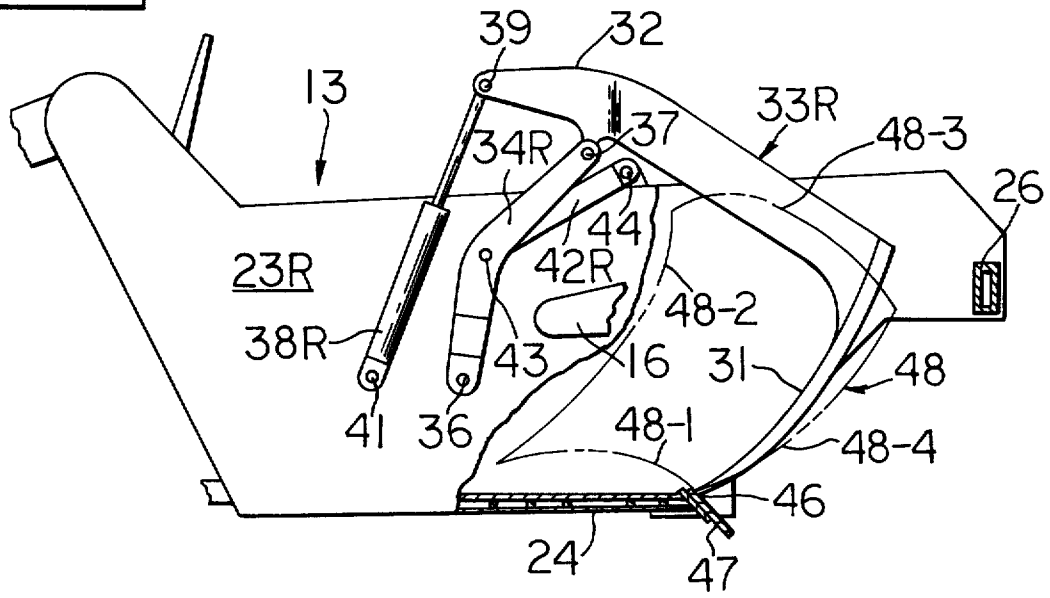
39
32
13
33R
37
34R
48-3
26
44
23R
42R
48-2
38R
43
16
31
48
41
36
48-1
48-4
46
24
47

Fig_4_

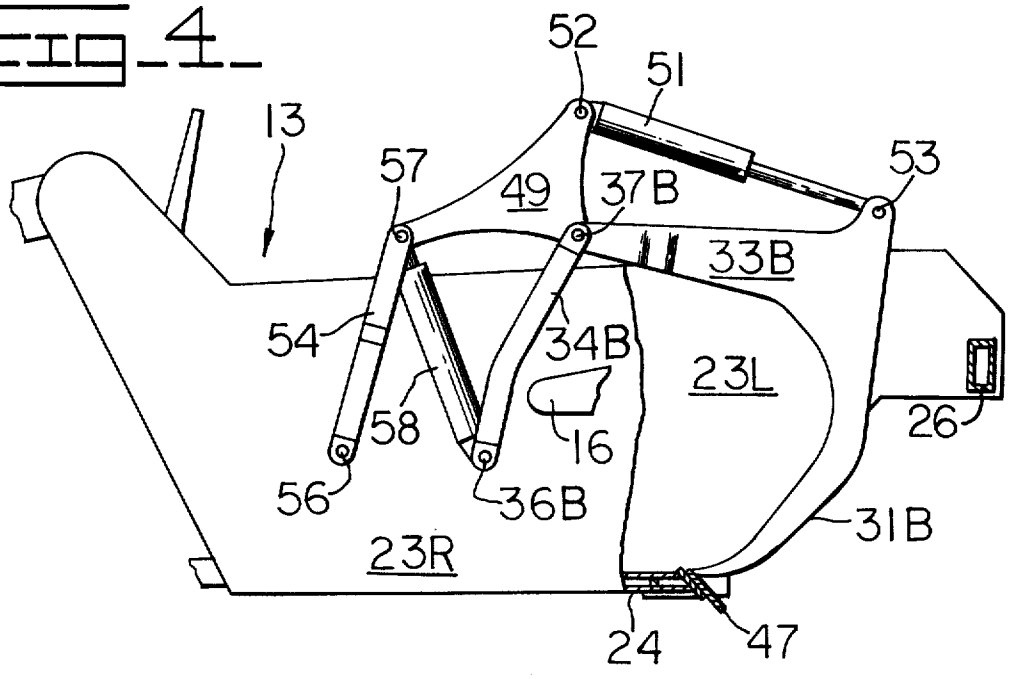
52
51
13
57
49
37B
53
33B
54
34B
23L
58
16
26
56
36B
31B
23R
24
47

Fig. 5

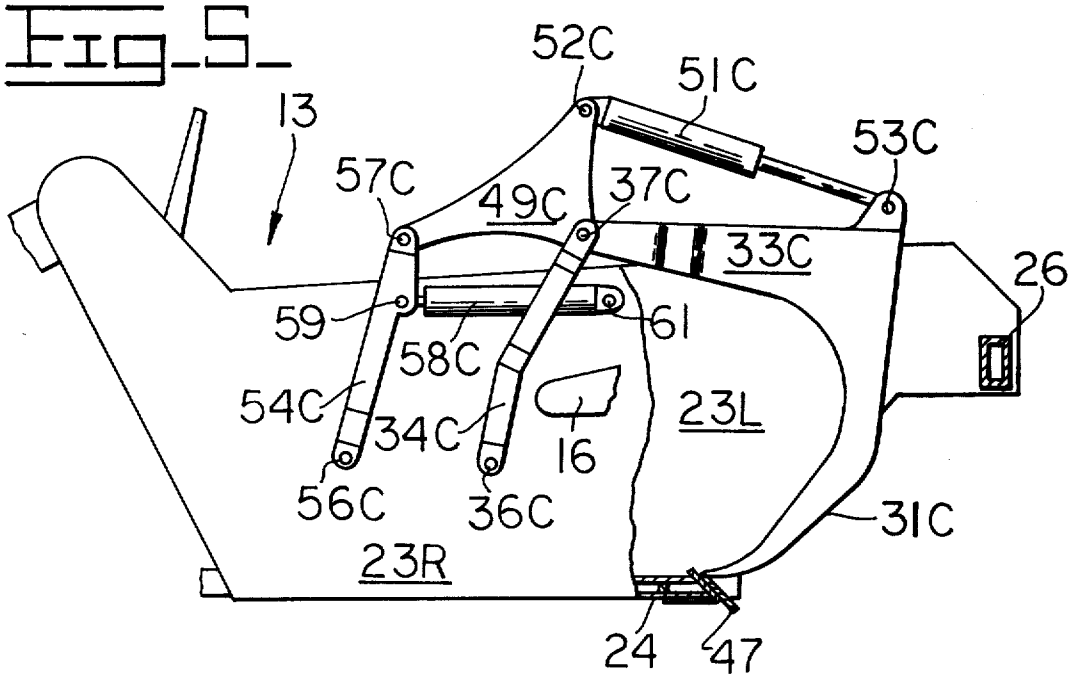
52C
51C
13
53C
57C
49C
37C
33C
26
59
61
58C
54C
34C
16
23L
56C
36C
31C
23R
24
47

Fig. 6

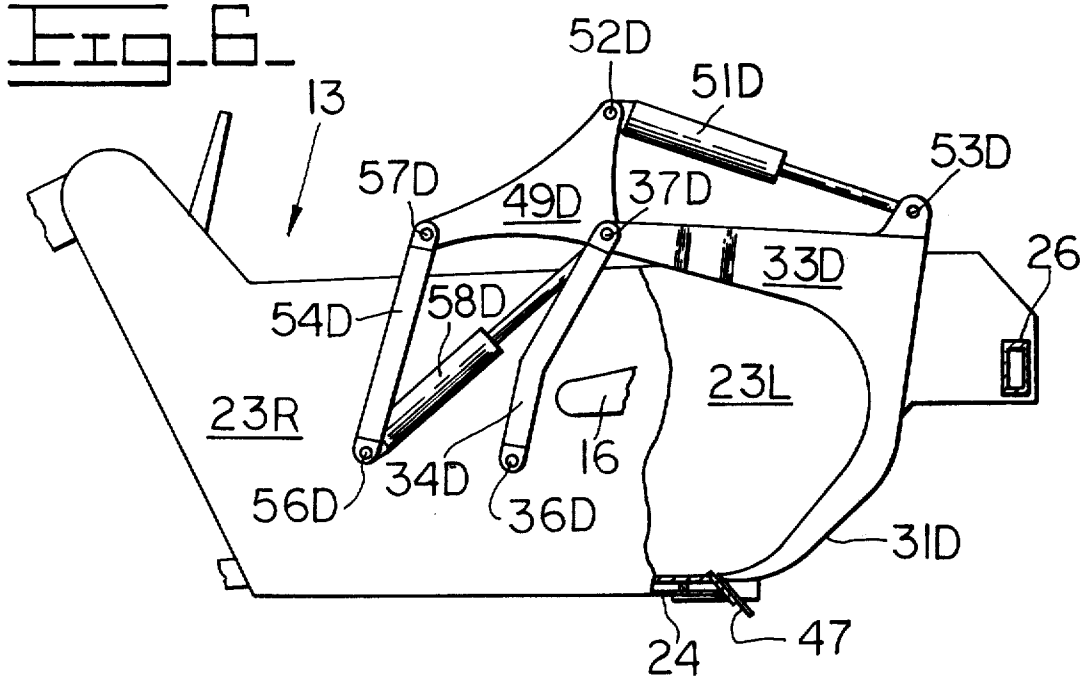
52D
51D
13
53D
57D
49D
37D
33D
26
54D
58D
23L
23R
16
56D
34D
36D
31D
24
47

HOEING APRON MECHANISM

BACKGROUND OF THE INVENTION

This invention relates to scraper vehicles for moving earth or the like and more particularly to scrapers having hoeing mechanisms for facilitating the movement of earth or the like into the scraper.

The bowl of a scraper has an open forward end with a cutting edge which acts to intercept a surface layer of earth or the like as the bowl is moved forward by an associated tractor unit. As the bowl fills, resistance to the entrance of additional earth increases, and very often the power of the tractor unit is insufficient to complete loading of the bowl. Various means have been devised to overcome this problem by assuring full loading of scrapers. Supplementary pusher tractors are often used to provide additional tractive power and in other instances, various forms of loading assist mechanism have been provided on the scraper itself. One such class of loading assist mechanism which has many inherent advantages is a hoeing mechanism. These include an apron carried at the forward portion of the bowl, the apron being caused to undergo a repeated hoeing or raking motion to forcibly draw earth up over the cutting edge and to move such earth rearwardly into the bowl. Hoeing mechanisms of this kind are disclosed, for example, in prior U.S. Pat. Nos. 3,471,952 and 3,708,896.

In order to enable the apron portion of the hoe to undergo the desired pattern of hoeing movement, it must be attached to the scraper bowl through a multiply pivoted support structure and fluid jacks or the like are provided to control pivoting motion about the articulations. While a variety of hoeing attachments have been heretofore designed with varying numbers of articulations between the apron and the bowl, a minimum of two pivot joints is required to achieve a useful hoeing motion. This in turn means that at least two sets of hydraulic motors are required to manipulate the apron.

As heretofore constructed in the above identified prior patents, for example, each set of hydraulic motors in such attachments have been connected across a single one of the pivot axes of the attachment. As a consequence, the motion of the lower edge of the apron resulting from actuating any single set of the fluid motors is a circular pattern of movement centered on the pivot coupling across which that particular set of motors is coupled. The best pattern of hoeing motion is not defined by a sequence of such circular arcs. Thus, to realize an optimum pattern of hoeing movement with these prior attachments, it is necessary to actuate at least two of the sets of hydraulic motors simultaneously and careful coordination of the simultaneous actuations of the two sets of hydraulic motors is necessary. Whether the hydraulic motors are controlled manually, or by means of an automatic cycling system of the kind disclosed in Applicant's copending Appln. Ser. No. 213,362, filed Dec. 29, 1971 now U.S. Pat. No. 3,762,076, for example, the control operation or control apparatus therefor is undesirably complicated. Much simpler manual control manipulations or automatic control systems could be realized if it were only necessary to actuate a single set of hydraulic motors at any given time on order to realize an efficient pattern of hoeing motion.

Prior hoeing mechanisms for scrapers have also been subject to certain other problems such as a tendency

toward top heaviness of the scraper vehicle as a whole resulting from the location of much of the bulky hoe structure at a high position on the vehicle. In certain of these prior constructions, the configuration of the mechanism is such that the apron is raised completely out of the scraper bowl under certain conditions. As a consequence, the contruction must either be of a massive but precision fitted nature or else additional complications for stabilizing are required in order to assure that flexibility in the supporting structure does not enable the apron to shift sidewardly slightly while above the bowl and thereby be prevented from being lowered into the bowl.

SUMMARY OF THE INVENTION

This invention provides a hoeing mechanism in a scraper which may be caused to move through an efficient pattern of hoeing motion by actuating individual ones of a plurality of sets of hydraulic motors or the like in a sequential manner, rather than requiring simultaneous actuations of more than one of the sets of motors, thereby greatly simplifying the manual operations or control system required to control the mechanism. Other patterns of motion which do require simultaneous motor actuations can also be accomplished if desired but are not necessary for routine hoeing movement. The apron support and motor elements needed to accomplish this result are compact and have a low center of gravity so that stability of the scraper vehicle as a whole is enhanced. The construction does not necessitate that the apron be raised completely above the bowl, and thus, problems of possible overlap of the apron with the bowl sidewalls are avoided.

Accordingly, it is an object of this invention to facilitate the loading of scrapers by providing a hoeing mechanism which can be more simply and conveniently controlled.

It is another object of the invention to provide a hoeing mechanism of the type operated by a plurality of motor means wherein efficient hoeing movements can be accomplished by sequential actuation of individual ones of said motor means without requiring simultaneous actuation and coordination of a plurality of the motor means.

It is another object of this invention to provide a scraper having a hoeing mechanism with a low center of gravity and in which the apron of the hoe is maintained within the scraper bowl at all times.

The invention together with further objects and advantages thereof will best be understood with reference to the following description of preferred embodiments taken in conjunction with the accompanying drawings.

BRIEF DESCRIPTION OF THE DRAWINGS

In the accompanying drawings:

FIG. 1 is a side elevation view of a typical scraper embodying the present invention;

FIG. 2 is a perspective view of the bowl region of the scraper of FIG. 1 including a first embodiment of a hoeing mechanism in accordance with the invention;

FIG. 3 is a broken out side view of the structure shown in FIG. 2;

FIG. 4 is a view corresponding substantially to FIG. 3 but showing a second embodiment of the hoeing mechanism;

FIG. 5 is a broken out side view of the bowl region of the scraper having a third embodiment of the hoeing mechanism thereon; and

FIG. 6 is a broken out side view of a scraper bowl having a fourth embodiment of the hoeing mechanism mounted thereon.

DESCRIPTION OF PREFERRED EMBODIMENTS

Referring initially to FIG. 1 of the drawings, a hoeing mechanism **11** in accordance with the invention is applicable to a wide variety of known scrapers, the type of scraper **12** depicted in FIG. 1 being a typical example. Such scrapers include a bowl **13** for carrying earth riding upon rear wheels **14** and which is supported at the forward end by draft arms **16** which connect to a tractor unit **17** having front wheels **18.** In this example, a front engine **19** on the tractor unit powers the front wheels while a rear engine **21** carried behind bowl **13** powers the rear wheels. Fluid jacks **22** provide for raising or lowering of the front end of the bowl **13** by pivoting movement about the axis of the rear wheels **14** so that the bowl may be lowered to intercept and load a layer of earth and may be raised to transport a load to a distant site. Aside from the hoeing mechanism **11,** suitable detailed constructions for scrapers of this general kind are well known to the art and accordingly will not be further discussed.

Referring now to FIG. **2,** salient elements of the bowl **13** include right and left sidewalls **23R** and **23L** respectively and a floor **24** extending between the lower edges thereof. To add rigidity and strength, a front crossbrace **26** extends between the upper forward portion of the sidewalls while a rear cross member **27** extends between the upper rear portions thereof. A rear wall for the bowl is effectively defined by an upright ejector plate **28** which can be selectively advanced within the bowl by actuation of a hydraulic ejector jack **29** to discharge material through the forward end of the bowl provided that an apron member **31,** to be hereinafter described in more detail, is lifted. The hoeing mechanism **11** is coupled to and supported by the bowl **13.**

Referring now to FIGS. **2** and **3** in conjunction, apron member **31** has arms **33R** and **33L** which extend in a generally rearward direction from the upper right and upper left corners respectively of the apron member. The more forward portions of the arms **33** are spaced aprt to fit within the bowl **13** adjacent the sidewalls **23** thereof and each such arm has an offset section **32** which situates the rearmost portions of the arms outside the planes of the adjacent sidewalls.

To couple the apron member **31** to the bowl sidewalls while providing for an efficient pattern of apron movement, right and left forward links **34R** and **34L** respectively have lower ends coupled to the central area of sidewalls **23R** and **23L** respectively by pivot joints **36** which enable the upper ends of the links to be swung forwardly and backwardly. The upper end of each pivot link **34** is coupled to an intermediate portion of the adjacent one of the apron member arms **33** by second pivot joints **37** which may be situated adjacent the rearward end of the offset sections **32** of the arms **33.** Each of a set of first hydraulic jacks **38R** and **38L** has an upper end coupled to the rearmost end of a separate one of the arms **33R** by a pivot coupling **39** and has a lower end coupled to the adjacent one of the bowl sidewalls **23** by another pivot joint **41** spaced rearwardly from the pivot joint **36** at that side of the bowl. Accordingly, contraction of the jacks **38** pivots the apron member **31** upwardly while extension of these jacks lowers the apron member.

Each one of a pair of second hydraulic jacks **42R** and **42L** has a rearward end coupled to the intermediate angled portion of an associated individual one of the links **34** by a pivot joint **43** and extends upward and forward therefrom. The upper forward end of each such jack **42** is coupled to the top of the adjacent bowl sidewall **23** at still another pivot joint **44.**

Considering now the operation of the above described structure, the apron member **31** is depicted in FIG. **3** at the particular position at which the lower edge **46** of the apron is at the cutting edge **47** that extends along the forward portion of the bowl floor **24.** This is the normal rest position of the apron member **31** at which it effectively forms a closure for the forward end of the bowl to retain material while it is transported away from the work site. During loading with the apron raised, a layer of earth is intercepted by the cutting edge **47** and is carried upward and backward into the bowl intitially as a result of the forward motion of the scraper, but as the amount of loaded material increases, considerable resistance to the entrance of additional material is present. To force such material into the bowl, the apron member **31** is manipulated through one or more hoeing motions. Dashed line **48** in FIG. **3** depicts the movement of the lower edge **46** of the apron member during the course of a typical hoeing motion.

In contrast to prior hoeing mechanisms of this general type, this preferred pattern of hoeing movement **48** may be accomplished by sequential actuations of the two sets of jacks **38** and **42** and does not require that the two sets of jacks be operated simultaneously which requirement would complicate the control function whether it is done manually or by automatic cycling means. Starting with the apron member **31** in the position depicted in FIG. **3,** the initial movement **48-1** may be realized by extending the jacks **42** while jacks **38** remain inactivated. It should be observed that this initial movement **48-1** is not a circular movement centered on any single pivot axis, but follows a more complex curve which initially extends sharply upward from the cutting edge **47** and then flattens to travel in a largely rearward direction. This results from a parallelogram action brought about by the above described spacing of the four pivot joints **36, 37, 39** and **41** and at this particular time, the jacks **38** function in the manner of rigid links. At the completion of the initial movement **48-1,** jacks **42** may be inactivated while jacks **38** are actuated to contract. This causes the lower edge **46** of the apron member to move upwardly along a second movement **48-2** of the hoeing pattern which portion is a circular arc centered on the axis of pivot joint **37** (it should be observed that at this stage, the pivot joint **37** has been shifted rearwardly from the position at which it appears in FIG. **3.** The third movement **48-3** of the hoeing pattern is then realized by inactivating the jacks **38** and reactuating jacks **42** to contract. There is again a form of parallelogram linkage action which causes the movement **48-3** to differ from a strictly circular arc movement in that the rate of curvature of the path **48-3** decreases throughout the movement. The final segment **48-4** of the hoeing pattern is then accomplished by inactivating the now contracted jacks **42** while actuating jacks **38** to extend. This movement again follows a cir-

cular arc path centered on the axis of the pivot joints 37 to return to the initial starting point. If necessary, additional hoeing motions can be repeated by the same sequence of jack actuations.

Accordingly, on the predominantly upward and downward segments 48-2 and 48-4 of the hoeing movement a strictly circular movement may be followed while on the predominantly backward and forward segments 48-1 and 48-3 of the movement, a departure from strict circularity is present to provide a more efficient overall hoeing movement.

In conventional hoeing apron mechanisms, each hydraulic jack has been connected across a single pivot joint, and as a consequence, only circular arc motions can be accomplished unless more than one jack is actuated at a single time thereby complicating control functions. The capability of the above described structure of executing the preferred hoeing motion without necessitating simultaneous actuation and coordination of a plurality of sets of jacks does not in any way prevent apron manipulations involving simultaneous jack actuations if these are desired. It will be apparent from examination of the structure, that the apron member 31 may be made to undergo any desired pattern of movement by coordinating simultaneous actuations of the two sets of jacks 38 and 42 within the limits imposed by the maximum degrees of extension and contraction of the two sets of jacks. Further, the described preferred pattern 48 of hoeing motion, which requires only sequential actuations of the jack, can be foreshortened in any direction by limiting the extension or contraction of the jacks to less than the full stroke thereof.

Variations of the above described structure are possible in which an essentially similar hoeing movement with similar advantages may be effected. FIG. 4 illustrates such a modification. In the embodiment of the invention depicted in FIG. 4, the structure of the scraper bowl 13 including sidewalls 23, floor 24 and cutting edge 47 may all be similar to that of the previously described embodiment. The apron member 31B again has a rearwardly extending arm 33B at each upper corner and at each side of the bowl an angled link 34B has a top end coupled to the back end of arm 33B by a pivot joint 37B and has a lower end coupled to the adjacent bowl sidewall by a pivot connection 36B.

At each side of the bowl, a lower forward corner of a substantially triangular plate 49 is also pivotally coupled to the top of link 34B and arm 33B at pivot joint 37B. A first hydraulic jack 51 has one end coupled to the uppermost apex of plate 49 at a pivot joint 52 and has the other end coupled to the adjacent upper corner of apron member 31B at a pivot joint 53. Accordingly, contraction or extension of the jack 51 acts to raise or lower the apron member 31B along a circular arc path centered on pivot joint 37B.

Considering now the means for effecting predominantly forward and backward motion of the apron member 31B along a noncircular path, at each side of the bowl a linear rear link 54 has a lower end coupled to the bowl sidewall 23R at a pivot joint 56 situated rearwardly on the scraper from pivot joint 36B. The upper end of rear link 54 is coupled to an elongated rear apex of plate 49 at another pivot joint 57. An additional hydraulic jack 58 is connected between pivot joints 36B and 57. Owing to the parallelogram action provided by the links 34B and 54, extension of jack 58 draws the apron member 31B backward along a noncircular curvilinear path closely approximating that of the previously described embodiment. As in the previous instance, the preferred pattern of hoeing movement can be executed by sequentially actuating the jacks 51 and 58 without necessarily requiring simultaneous actuation and coordination of both jacks.

As FIG. 4 is a side elevation view, only the elements of the hoeing mechanism at one side thereof appear in the drawing. These elements, such as arm 33, links 34 and 54, plate 49, cylinders 51 and 58 and the several pivot points 36, 37, 52, 53, 56 and 57 are each duplicated at the other side of the scraper bowl 13.

In the embodiment of the invention shown in FIG. 4, the jack 58 may be placed in other positions and still accomplish the desired result of forcing distortion of the trapezium defined by pivot joints 36, 37, 56, and 57 when the predominantly forward or backward motion of the apron member is desired and of locking the trapezium against movement during the more vertical portions of the hoeing pattern. One such modification is shown in FIG. 5. In FIG. 5, all elements with the exception of cylinder 58 may be similar to those described with reference to the previous embodiment and accordingly have similar reference numerals except insofar as the letter C has been added. The sole difference between the modification of FIG. 5 and the structure previously described with reference to FIG. 4 is that each of the cylinders 58B has one end coupled to an upper intermediate portion of rear link 54C by a pivot joint 59 and extends forwardly therefrom and has an opposite end coupled to the bowl sidewall 23R by a pivot joint 61. As the pattern of motion of the apron member 31C is not determined by the precise position of cylinder 58C, extension or contraction of such cylinder will produce the same motion as is effected by the corresponding cylinder 58 of the embodiment shown in FIG. 4.

FIG. 6 depicts a further modification in which the corresponding cylinder 58D is simply coupled between pivot joints 56D and 37D, all other elements of the mechanism being similar to those depicted and described with reference to FIG. 4 and accordingly being identified by similar reference numerals characterized by the letter D. Since as pointed out above, pivot joints 36D, 37D, 56D and 57D define a distortable trapezium, extension or contraction of the cylinder 58D produces a pattern of motion of the apron member 31D similar to the pattern of movement realized in either of the structures depicted in FIGS. 4 and 5, notwithstanding the different placement of the cylinder 58D.

Thus, many modifications of the above described structure are possible while still realizing the advantages thereof and it is not intended to limit the invention, except as defined in the following claims.

What is claimed is:

1. In a scraper having a bowl with sidewalls and an open forward end for receiving material to be loaded, a hoeing mechanism for assisting the movement of material into said bowl comprising:

an apron member disposed transversely in the forward portion of said bowl, said apron member having a pair of arms rigidly fastened thereto and extending rearwardly therefrom at opposite sides thereof,

a pair of forward links each having a lower end coupled to a separate one of said bowl sidewalls by first

pivot means enabling the upper ends of said forward links to be swung forward and backward,

second pivot means coupling the upper end of each of said forward links to the adjacent one of said apron member arms,

first motor means for selectively swinging said upper ends of said forward links in a forward and backward direction to shift said apron member forwardly and backwardly relative to said bowl,

a pair of rear links, each having a lower end coupled to a separate one of said bowl sidewalls by third pivot means situated rearwardly from the first pivot means and each having an upper end coupled to the adjacent one of said arms through means including at least fourth pivot means situated rearwardly from said second pivot means to cause said arms and apron members to turn about said second pivot means as said first motor means swings said forward links, the spacing between said first and third pair of pivots being constant and the spacing between said second and fourth pivots being constant, whereby actuation of said first motor means alone drives said apron in a nonarcuate path, and

second motor means for selectively pivoting said apron member about said second pivot means.

2. The combination defined in claim **1** wherein each of said arms has a forward portion which extends backwardly from said apron member between said sidewalls and has an offset section which extends outwardly across the top of the adjacent one of said sidewalls and has a rear section which extends rearwardly outside said adjacent one of said sidewalls, and wherein said forward and rear links are situated outside said sidewalls of said bowl.

3. The combination defined in claim **1** wherein said second motor means and said rear links are comprised of a pair of extensible and contractible fluid jacks connected between said third and fourth pivot means.

4. The combination defined in claim **3** wherein said first motor means comprises an additional pair of extensible and contractible fluid jacks each being connected between the adjacent one of said bowl sidewalls and an intermediate point on the adjacent one of said forward links.

5. In a scraper having a bowl with sidewalls and an open forward end for receiving material to be loaded, a hoeing mechanism for assisting the movement of material into said bowl comprising:

an apron member disposed transversely in the forward portion of said bowl, said apron member having a pair of arms rigidly fastened thereto and extending rearwardly therefrom at opposite sides thereof,

a pair of forward links each having a lower end coupled to a separate one of said bowl sidewalls by first pivot means enabling the upper ends of said first links to be swung forward and backward,

second pivot means coupling the upper end of each of said forward links to the adjacent one of said apron member arms,

first motor means for selectively swinging said upper ends of said forward links in a forward and backward direction to shift said apron member forwardly and backwardly relative to said bowl,

a pair of rear links, each having a lower end coupled to a separate one of said bowl sidewalls by third pivot means situated rearwardly from the first pivot means and each having an upper end coupled to the adjacent one of said arms through fourth pivot means situated rearwardly from said second pivot means to cause said arms and apron members to turn about said second pivot means as said first motor means swings said forward links,

a pair of plate members each being connected to a separate one of said arms and forward links through said first pivot means and extending rearwardly therefrom to connect with said upper end of a separate one of said rear links through said fourth pivot means, and

second motor means for selectively pivoting said apron member about said second pivot means, wherein said second motor means comprise a pair of hydraulic jacks coupled between said apron member and a separate one of said plates at a point above said coupling of said second pivot means thereto.

6. The combination defined in claim **5** wherein said first motor means comprise a pair of extensible and contractible hydraulic jacks each being connected between said first and fourth pivot means at a separate side of said bowl.

7. The combination defined in claim **5** wherein said first motor means comprises a pair of extensible and contractible hydraulic jacks each being coupled between a separate one of said bowl sidewalls and the adjacent one of said rear links.

8. The combination defined in claim **5** wherein said first motor means comprises a pair of extensible and contractible hydraulic jacks each being coupled between said third and said second pivot means at a separate side of said bowl.

* * * * *