US 20090045598A1

(19) United States

(12) Patent Application Publication

(10) Pub. No.: US 2009/0045598 A1

(43) Pub. Date: Feb. 19, 2009

Lee

(54) **SKATEBOARD CAPABLE OF ALL-DIRECTION RUNNING**

(76) Inventor: **Seung Youl Lee**, Chungcheongnam-do (KR)

Correspondence Address:
BACON & THOMAS, PLLC
625 SLATERS LANE, FOURTH FLOOR
ALEXANDRIA, VA 22314-1176 (US)

(21) Appl. No.: **11/920,122**

(22) PCT Filed: **May 4, 2006**

(86) PCT No.: **PCT/KR2006/001683**

§ 371 (c)(1),
(2), (4) Date: **Nov. 9, 2007**

(30) **Foreign Application Priority Data**

May 10, 2005 (KR) 20-2005-0013015

Oct. 31, 2005 (KR) 10-2005-0103038

Publication Classification

(51) **Int. Cl.**
A63C 17/00 (2006.01)

(52) **U.S. Cl.** **280/87.042**

(57) **ABSTRACT**

A skateboard including: a central rod unit; a first footplate installed to an end of the central rod unit to be rotatable on a vertical axis; a plurality of first casters installed to be rotatable, independent from the first footplate; a second footplate installed to another end of the central rod unit to be rotatable on another vertical axis; and a plurality of second casters installed to be rotatable, independent from the second footplate. A user may move forwards and backwards by putting both legs on footplates and walking forward and by alternating the both leg forward and backward. Also, since the first and second casters may independently rotate, rotating 360 degrees in place may be performed.

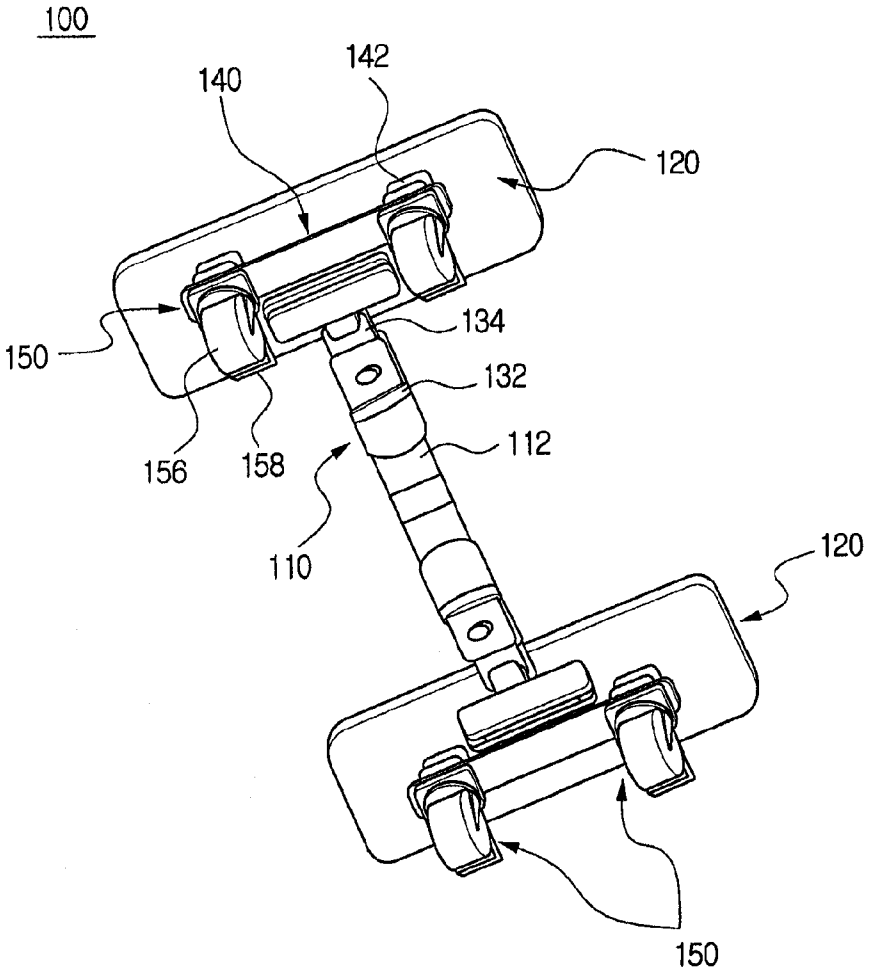

FIG. 1

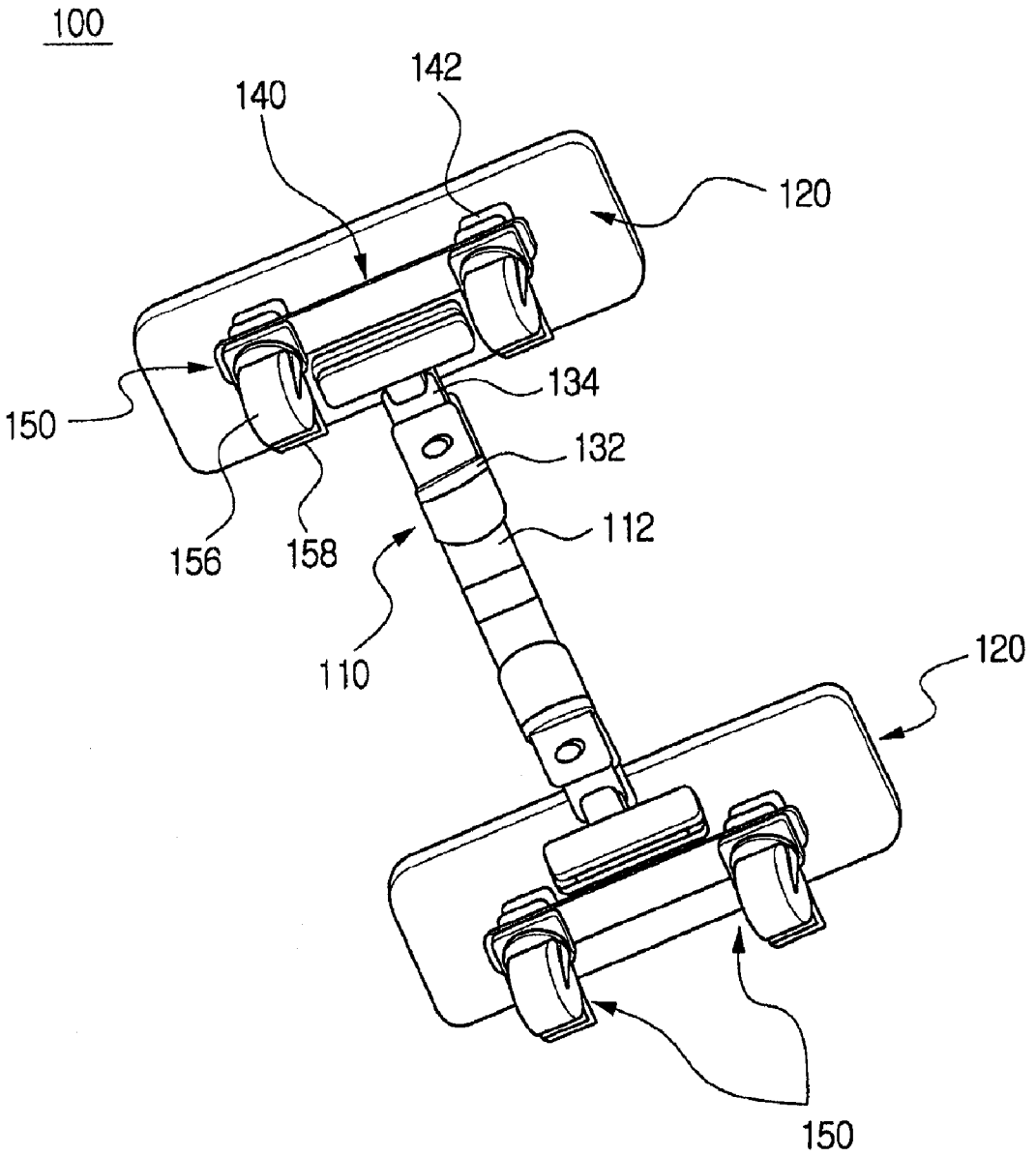

FIG. 2

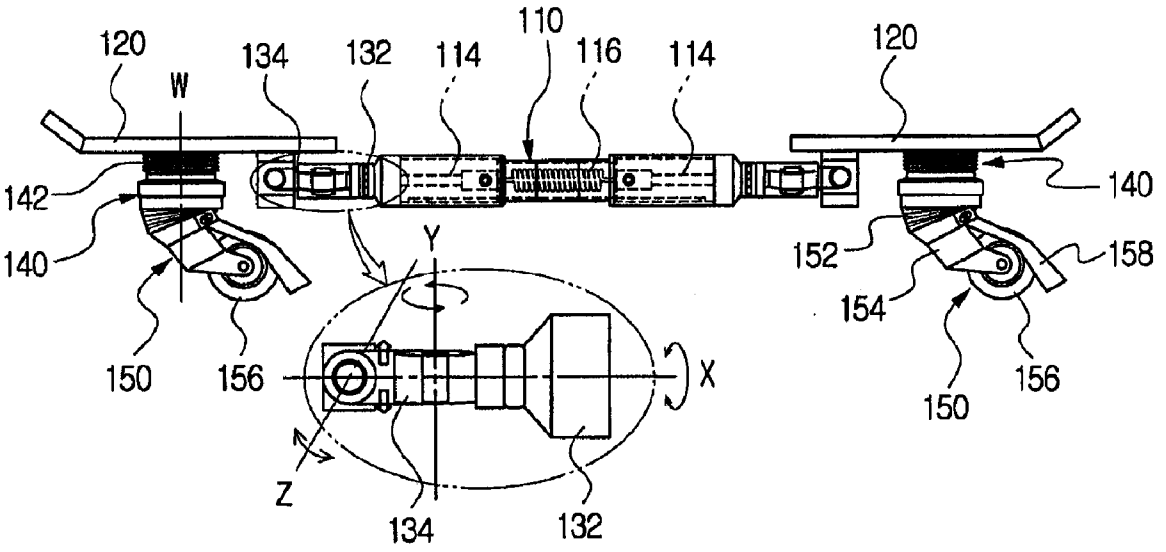
120
W
134
132
114
110
116
114
120
142
140
140
152
158
154
150
156
150
156
Y
X
Z
134
132

FIG. 3

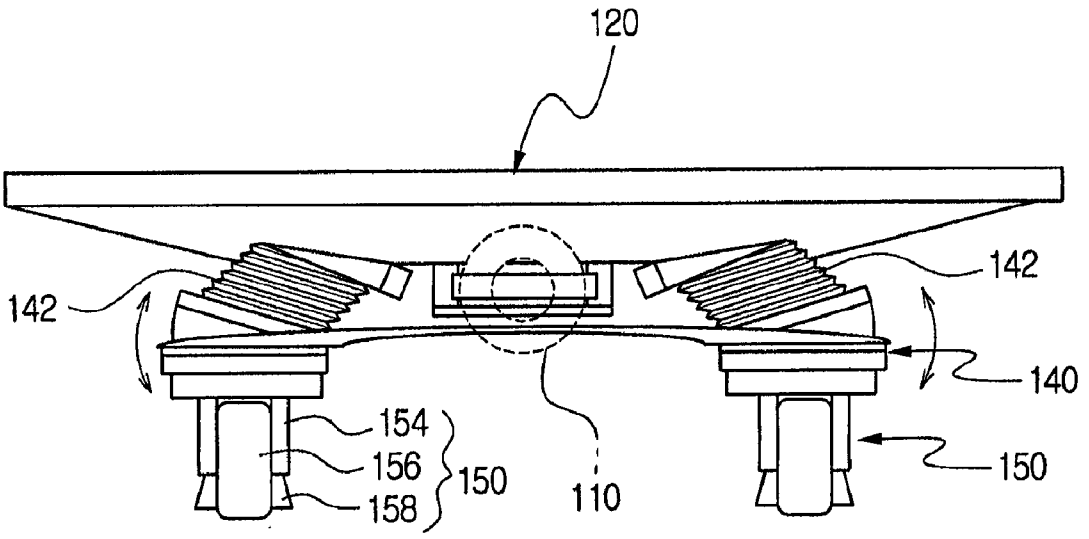

FIG. 4

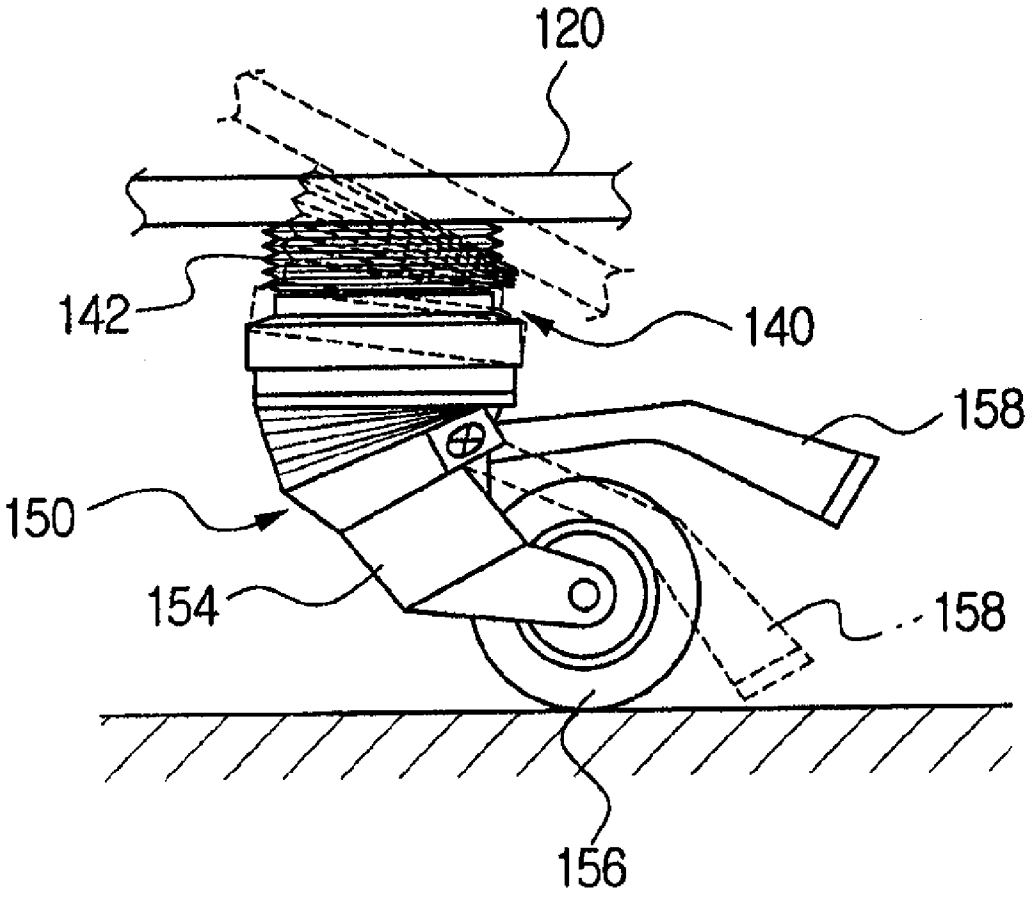

FIG. 5

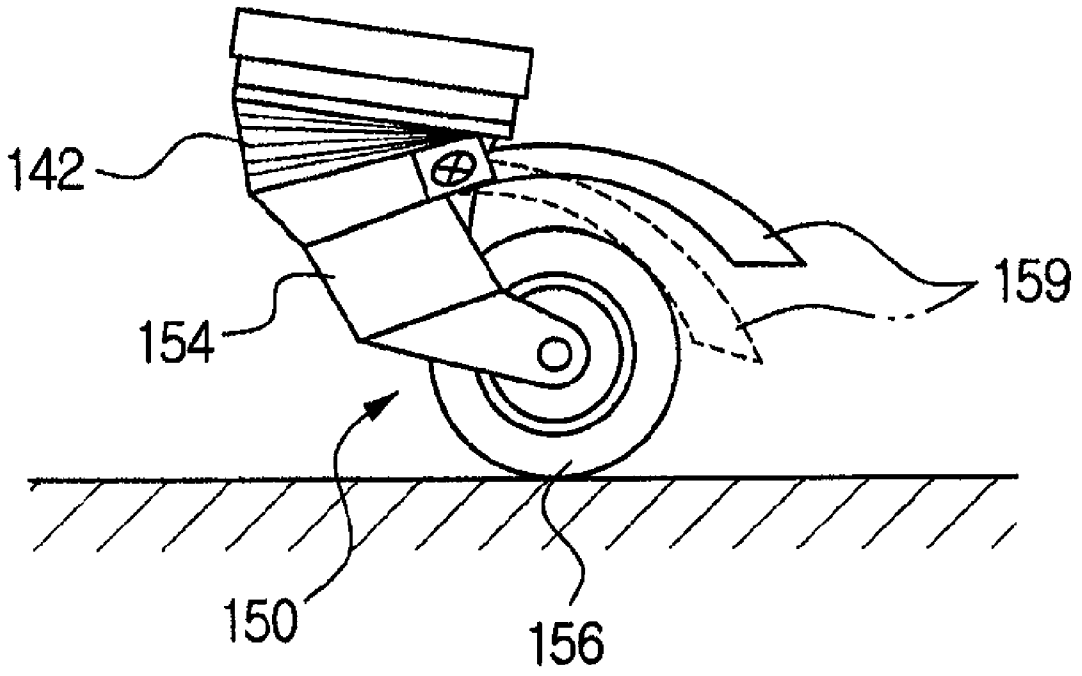

FIG. 6

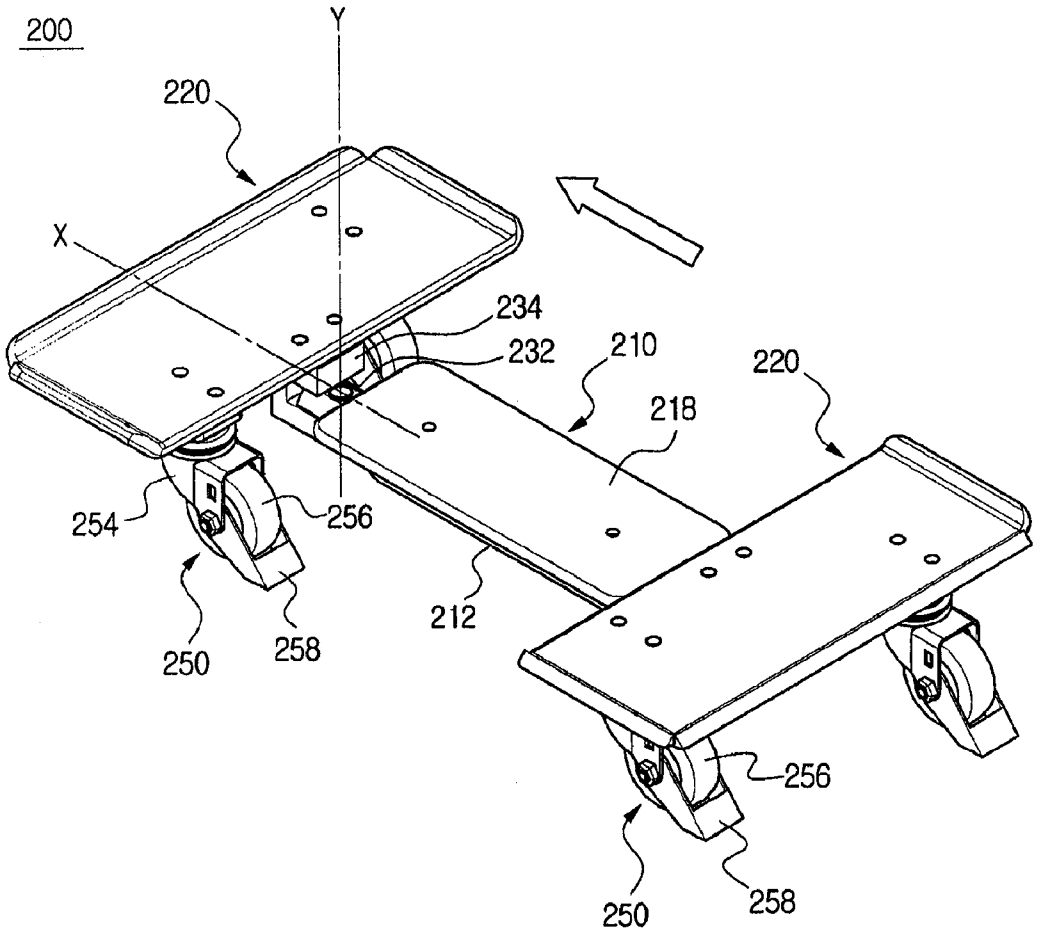

FIG. 7

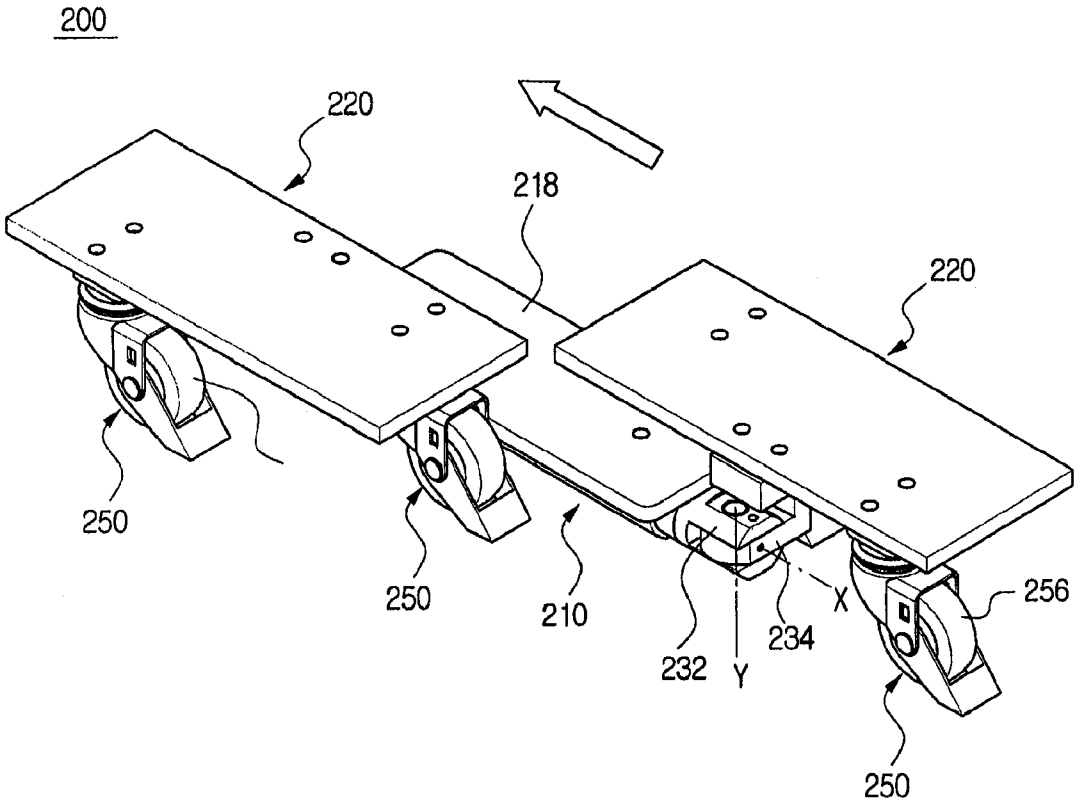

FIG. 8

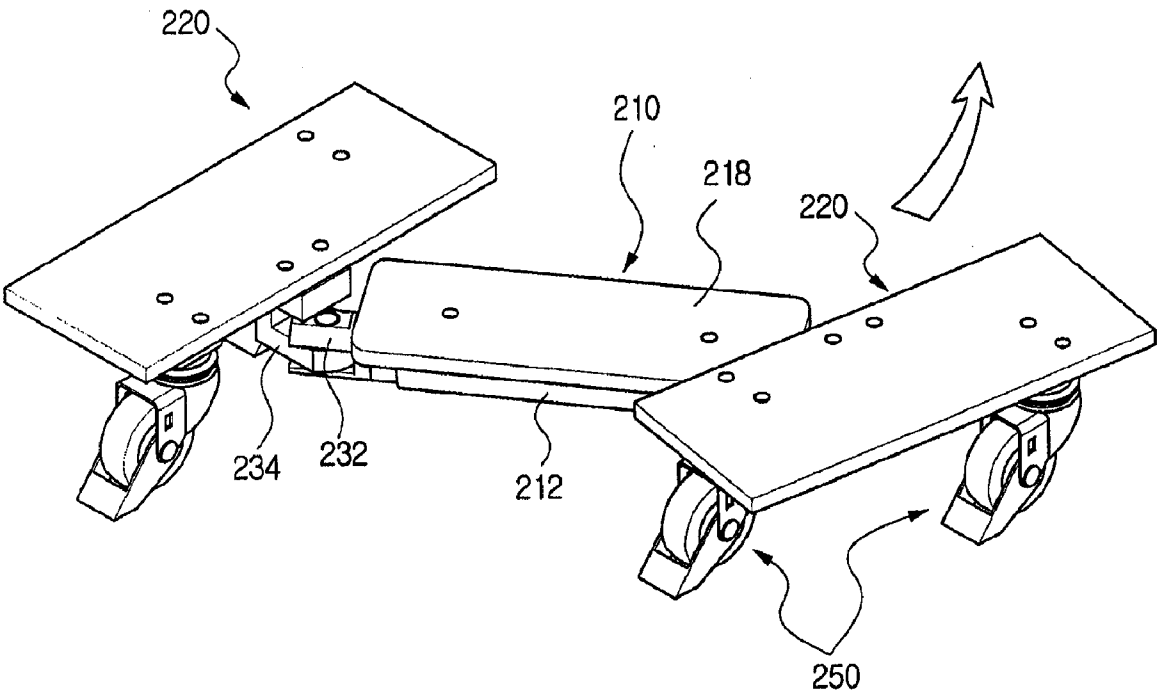

FIG. 9

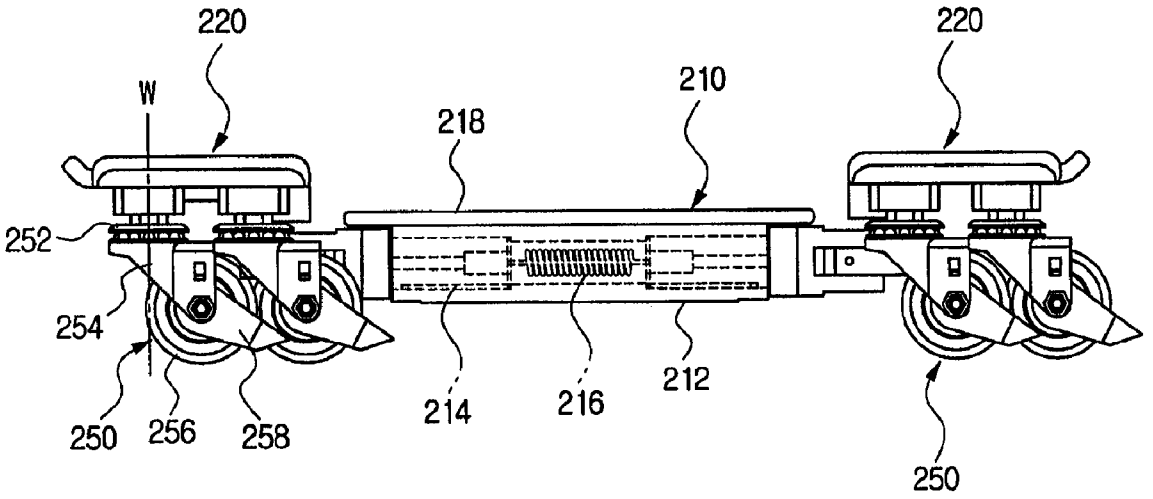

FIG. 10

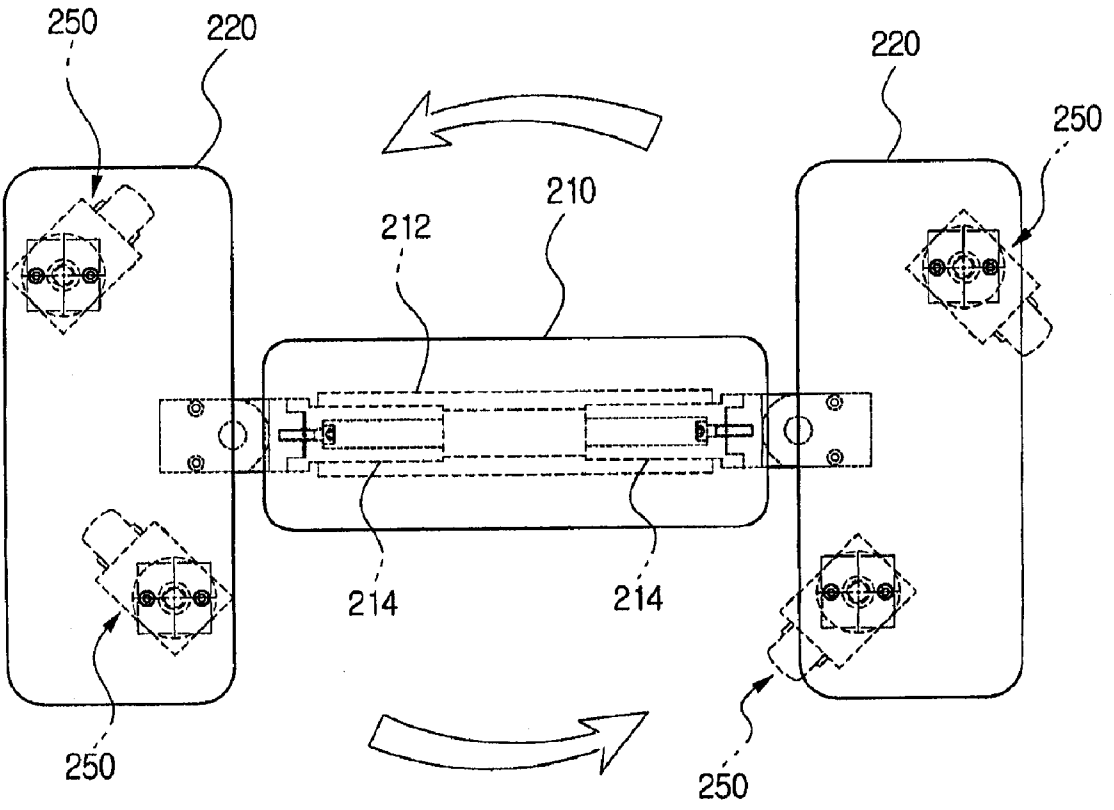

FIG. 11

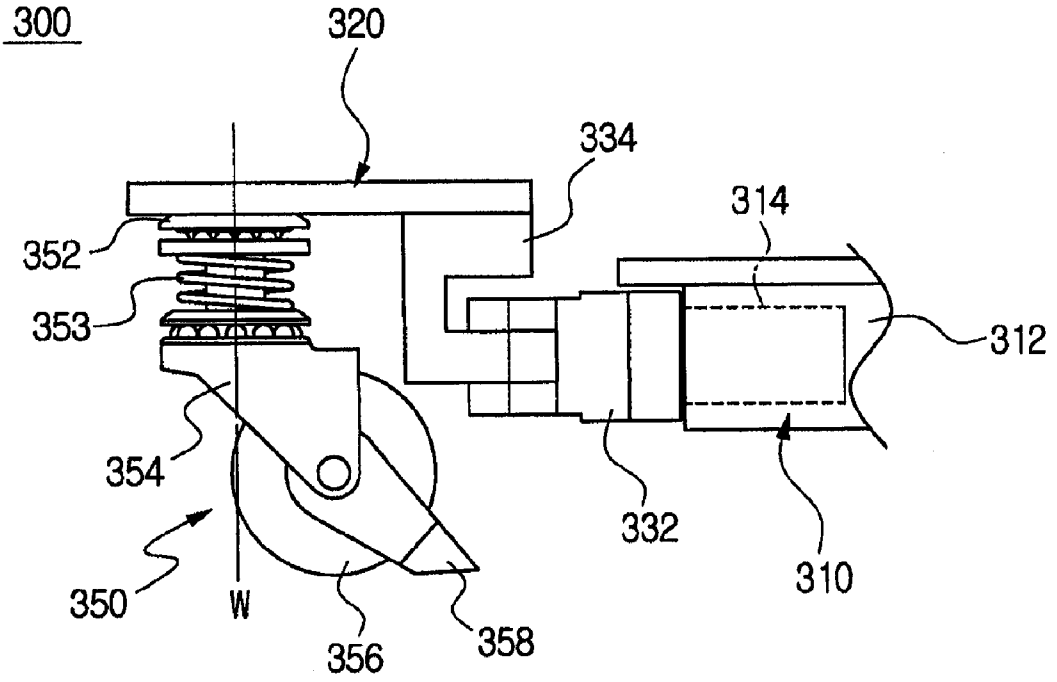

FIG. 12

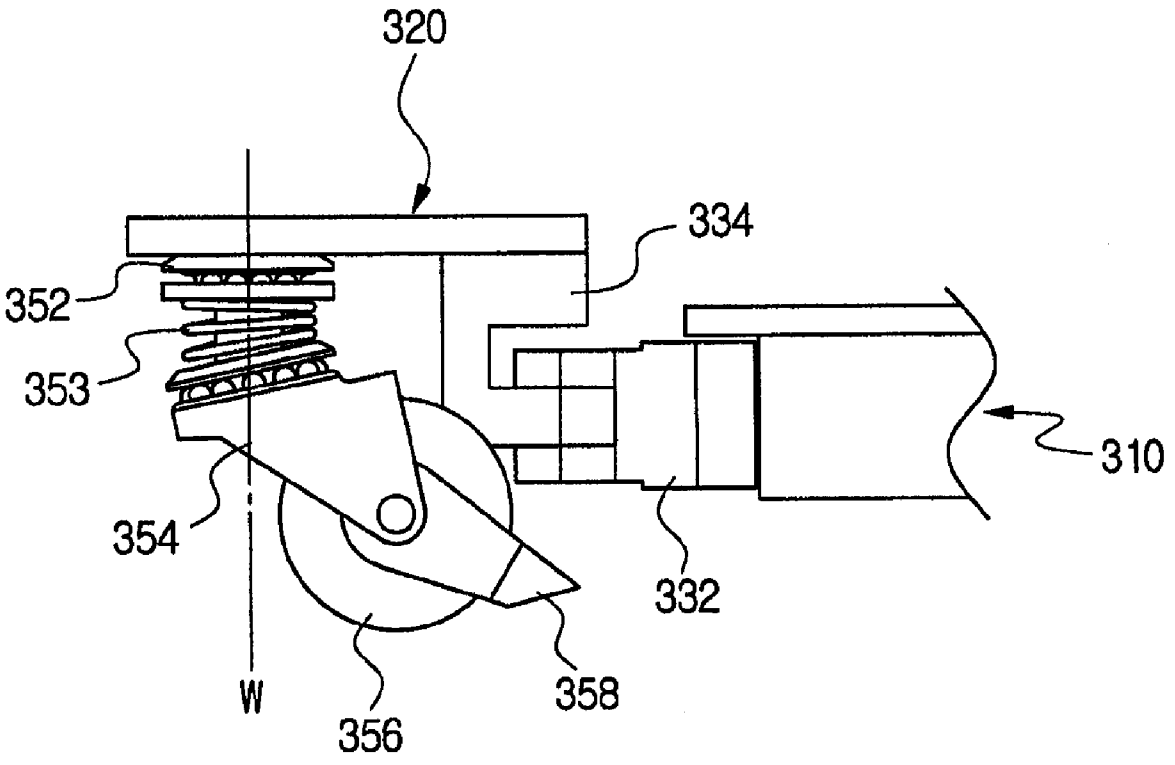

FIG. 13

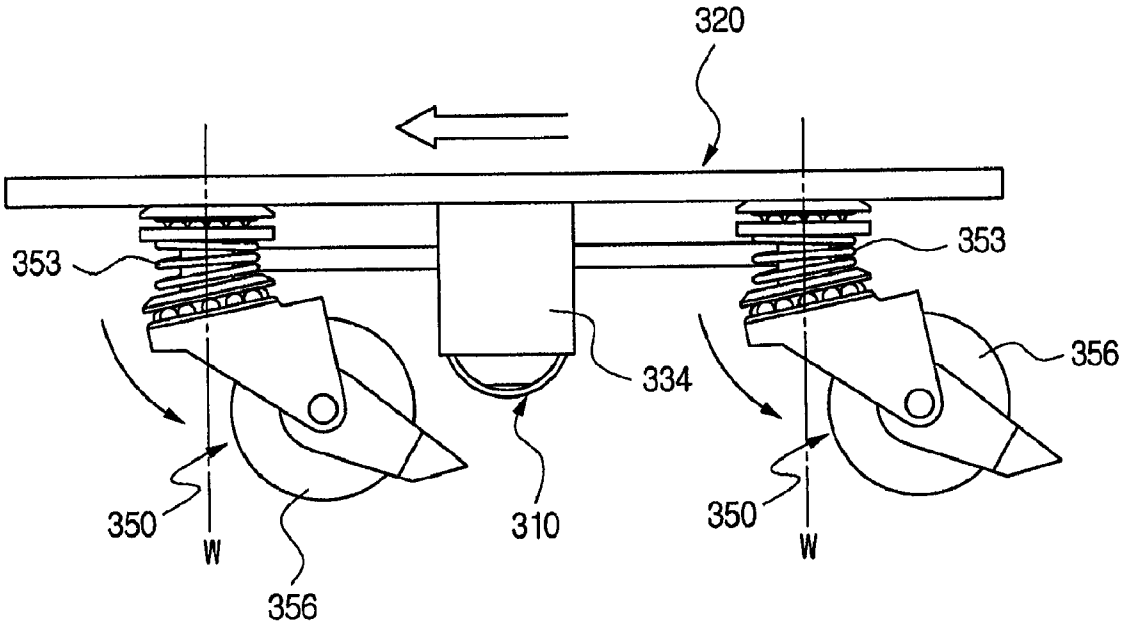

FIG. 14

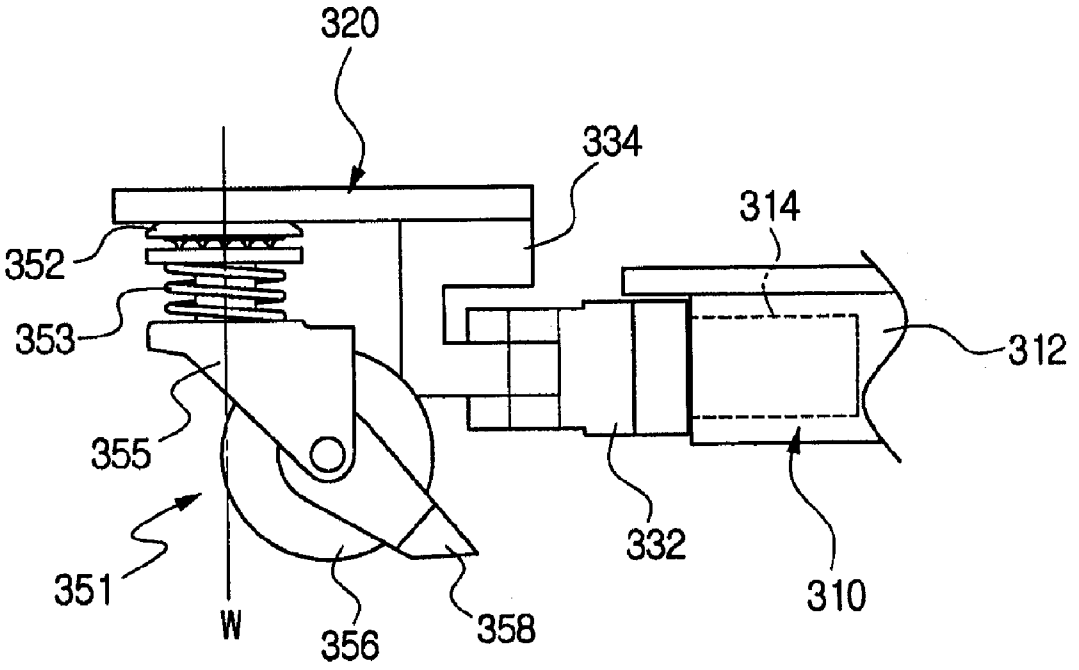

FIG. 15

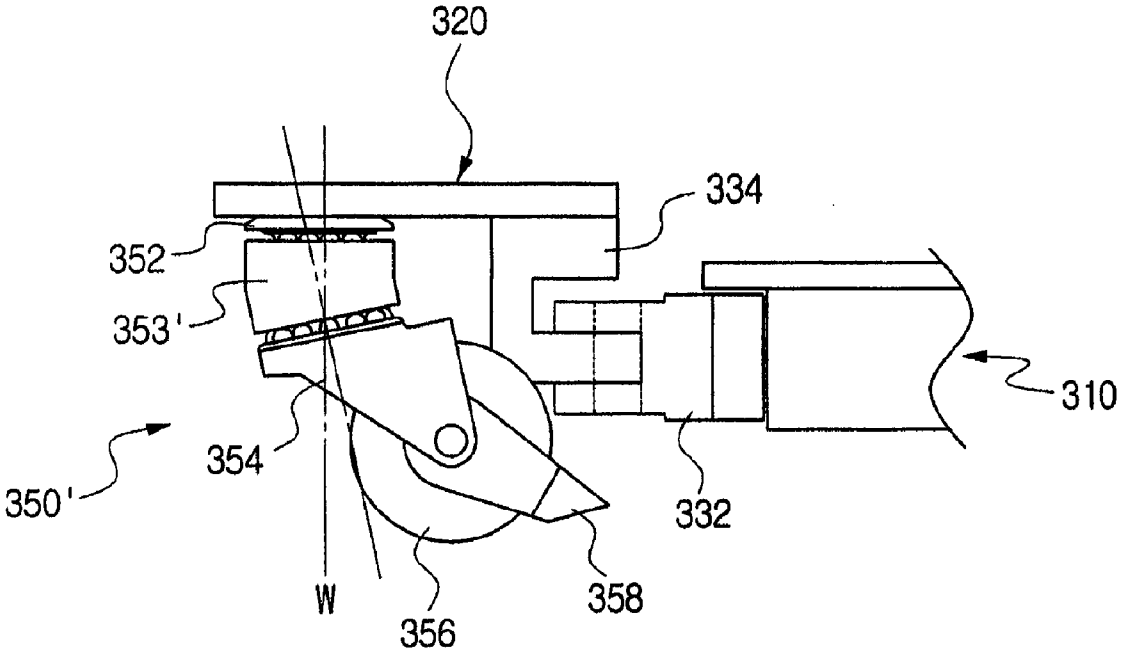

SKATEBOARD CAPABLE OF ALL-DIRECTION RUNNING

TECHNICAL FIELD

[0001] The present invention relates to a skateboard, and more particularly, to an all-direction running skateboard capable of freely moving, such as moving forward and backward in addition to a right and a left, as well as rotating in place.

BACKGROUND ART

[0002] Generally, a skateboard includes a footplate and a wheel attached to the footplate and two wheels forming a pair and are fastened to a front portion and a rear portion of the footplate, respectively. Since pairs of wheels attached to a front and a rear are disposed parallel to each other and fastened without pivoting ability, a direction may be changed by controlling a centroid, to change the direction while riding a skateboard. Accordingly, a radius for turning becomes very large and a wide space for the turn has to be provided.

[0003] Also, since it is difficult to generate driving force itself for a general skateboard, a user has to kick the ground while riding on a flat surface.

[0004] To solve the described disadvantage, an improved skateboard such as a snake board is disclosed. To consider the snake board and boards similar to the snake board, a user is on separated footplates and alternately moves both feet, thereby obtaining a driving force. However, the snake board and the similar boards only progress in the directions of right and left of a body and are not easy to rotate in a narrow space due to a considerable radius required for turning. Also, it is difficult to stop the snake board by itself on a downhill, and it is impossible to adjust a length of the snake board to suit a height of the user.

[0005] Namely, though the improved skateboard such as the snake board may obtain a driving force by itself by alternately leaning on each foot, since only one wheel is used for each footplate, it is difficult to stand on the snake board in a natural stance, it is impossible to get on the snake board while kicking the ground or running, when requiring rapid acceleration, and it is difficult to stop by itself on an inclined place. Due to one long body connected by a fixed axis, a radius of turning is large when performing a 360 degree rotation or making a U-turn while driving. Since the user has to maintain a specific posture and a position of a foot when getting on the snake board, body motion is restricted and is not free. Above all, since a progressive direction cannot vary, there are many restrictions on available activities.

DISCLOSURE OF INVENTION

Technical Goals

[0006] An aspect of the present invention provides a skateboard capable of moving forward and backward in addition to a right and a left of a user.

[0007] An aspect of the present invention also provides a skateboard capable of variously changing a posture and position of footplates according to conditions.

[0008] An aspect of the present invention also provides a skateboard capable of easily controlling an interval between footplates according to a body of a user and automatically expanding and contracting the interval between footplates.

[0009] An aspect of the present invention also provides a skateboard capable of stably stopping and easily controlling speed while driving on an incline or in a hazardous situation.

Technical Solutions

[0010] According to an aspect of the present invention, there is provided a skateboard including: a central rod unit; a first footplate installed to an end of the central rod unit to be rotatable on a vertical axis; a plurality of first casters installed to be rotatable, independent from the first footplate; a second footplate installed to another end of the central rod unit to be rotatable on another vertical axis; and a plurality of second casters installed to be rotatable, independent from the second footplate.

[0011] Since the first and second footplates are installed on both ends of the central rod unit on the vertical axis, it is easy to rotate right and left and a desired foot shape position may be maintained when a user reposes or drives. For example, the user may dispose the footplates in the shape of H interposing the central rod unit therebetween to move right and left or forward and backward. Also, the user may closely attach the footplates to both sides of the central rod unit to enable a progressive direction to be identical with a direction of feet. In addition, the user may dispose both feet in the shape of a T, to be parallel to each other, and may maintain the both feet in the shape of V. In this case, since the casters below the footplates freely rotate by 360 degrees or freely rotates in a certain range, the user may easily maintain a driving state though a posture of the user does not have to be identical with the progressive direction.

[0012] Also, the footplates may rotate right and left with respect to the central rod unit, and the footplates may be additionally designed to rotate or twist on a horizontal axis and/or a longitudinal axis of the central rod unit. Namely, the footplates may rotate up and down on a vertical axis and a horizontal axis vertical to the longitudinal axis on the both ends of the central rod unit. Also, the footplates may twist on the longitudinal axis of the central rod unit. Also, the footplates may rotate on the horizontal axis and the longitudinal axis, and may have a restoring force to return to an original position against the rotation and the twist so that the user can stably use the skateboard.

[0013] According to another aspect of the present invention, there is provided a skateboard including: a central rod unit; two footplates installed to both ends of the central rod unit to be rotatable; elastic supporters disposed at bottoms of the footplates, respectively, and including a suspension supporting a bottom surface of the footplates; and a plurality of directional casters installed to the elastic supporters to be independently rotatable, respectively.

[0014] The elastic supporters are installed between the footplates and the directional casters. Though the footplates are generally maintained to be parallel to a top surface of the directional caster, a partial bend between the footplates and the top surface of the directional caster may be generated by the elastic supporter while driving. Accordingly, the user may easily keep his or her balance to safely maintain a centroid and may easily change a direction, and an impact transferred from the ground may be effectively excluded.

[0015] The directional caster rotates in a position where a caster wheel is biased based on a turning axis by a bearing. Accordingly, the caster wheel of the directional caster rotates

in a position biased opposite to a progressive direction, and the position may be changed in response to a direction of the skateboard.

[0016] Also, since the directional caster is disposed below the elastic supporter, the caster wheel is biased opposite to the progressive direction and the suspension of the elastic supporter is inclined to the caster wheel. Since the elastic supporter is biased to the caster wheel, the directional casters of the one footplate substantially tends to be in one direction and the user may obtain a desired driving force by alternating both feet.

[0017] According to still another aspect of the present invention, there is provided a skateboard including: a central rod unit formed in a double pipe structure capable of elastically expanding and contracting lengthwise; two footplates installed on both ends of the central rod unit; and a plurality of casters installed to the respective footplate and elastically bending. In detail, the two footplates may be installed to rotate on a vertical axis and a horizontal axis on both sides of the central rod unit, respectively, and may twist in a certain boundary angle range on a longitudinal axis of the central rod unit. In this case, the footplates have a restoring force to return to an original position by receiving a restoring force of a spring while pivoting on the horizontal axis and vertical axis, and twisting on the longitudinal axis.

[0018] Also, at least one caster is installed to the respective footplate. For example, two or more casters may be installed to the both footplates. However, in this case, one caster may be installed to one footplate and two casters may be installed to the other footplate. The respective caster includes at least one footplate fixture installed on a bottom surface of each of the footplates to be rotatable, an elastic connecting portion connected to a bottom of the footplate fixture and bending in a predetermined range, a wheel connecting portion installed on a bottom of the elastic connecting portion to be rotatable, and a caster wheel installed to the wheel connecting portion to be rotatable. A directional caster rotating in a position biased against a pivot axis of the footplate fixture may be used as the caster wheel.

[0019] The elastic connecting portion of the respective caster may bend in a direction opposite to a progressive direction. The casters in the same footplate substantially tend to be in the same direction. Accordingly, a user may obtain a desired driving force by alternating each foot and may advance forward and backward as well as right and left of a body. Accordingly, the user may go forward by moving as when walking.

[0020] The plurality of casters may each turn in a different direction. The plurality of casters is disposed on a concentric circle structure and may rotate by 360 degrees in place. Also, the footplate may rotate up and down by 20 degrees, respectively, in a total of 40 degrees, on the horizontal axis and may twist 25 degrees in both directions, respectively, in a total of 50 degrees, on the longitudinal axis. Also, since the footplate is limited to rotate right and left by 90 degrees, in a total of 180 degrees, on the vertical axis, convenience of the user may be improved.

[0021] The user may make a board in the shape of I-I by using the described skateboard. Also, the skateboard may be adjusted to be suitable for a height of the user by extending or taking in the central rod unit. The skateboard may be variously transformed by rotating one or two of the footplates in the shape of I, right or left. Also, the skateboard may be driven by moving or pushing the footplates forwards or backwards. When driving on a downhill or at high speed, the user can change a direction by leaning and riding on an edge, as in a snowboard riding, and can reduce a speed by pressing a brake.

BRIEF DESCRIPTION OF DRAWINGS

[0022] FIG. **1** is a bottom perspective view illustrating a skateboard according to a first embodiment of the present invention;

[0023] FIG. **2** is a side view illustrating the skateboard of FIG. **1**;

[0024] FIG. **3** is a front view illustrating the skateboard of FIG. **1**;

[0025] FIG. **4** is a partial enlarged view illustrating a caster **150** of FIG. **1**;

[0026] FIG. **5** is a partial enlarged view illustrating another caster similar to the caster of FIG. **4**;

[0027] FIG. **6** is a perspective view illustrating a skateboard according to a second embodiment of the present invention;

[0028] FIG. **7** is a perspective view illustrating another state of the skateboard of FIG. **6**;

[0029] FIG. **8** is a perspective view illustrating still another state of the skateboard of FIG. **6**;

[0030] FIG. **9** is a side view illustrating the skateboard of FIG. **6**;

[0031] FIG. **10** is a top view illustrating the skateboard of FIG. **6** rotating in place;

[0032] FIG. **11** is an enlarged side view illustrating a skateboard according to a third embodiment of the present invention;

[0033] FIG. **12** is an enlarged side view illustrating the skateboard of FIG. **11** in a state of progress;

[0034] FIG. **13** is an enlarged side view illustrating another state of progress of the skateboard of FIG. **11**;

[0035] FIG. **14** is an enlarged side view illustrating a skateboard according to another embodiment similar to the third embodiment of the present invention; and

[0036] FIG. **15** is an enlarged side view illustrating a skateboard according to still another embodiment similar to the third embodiment of the present invention.

BEST MODE FOR CARRYING OUT THE INVENTION

[0037] Hereinafter, the exemplary embodiments of the present invention will be described in detail with reference to the attached drawings. However, the present invention is not limited or defined by the embodiments.

EMBODIMENT 1

[0038] FIG. **1** is a bottom perspective view illustrating a skateboard according to a first embodiment of the present invention, FIG. **2** is a side view illustrating the skateboard of FIG. **1**, and FIG. **3** is a front view illustrating the skateboard of FIG. **1**.

[0039] Referring to FIGS. **1** through **3**, a skateboard **100** includes a central rod unit **110**, footplates **120**, elastic supporters **140**, and casters **150**, which are installed to both ends of the central rod unit **110**. Two footplates **120** are installed to the both ends of the central rod unit **110** to be rotatable right and left. The elastic supporters **140** including suspensions **142** are provided below the footplates **120**. Since the two suspensions **142** support the footplate **120** at both sides of the elastic supporter **140**, right and left movement of a user may be transferred to the casters **150** via the footplates **120**. Also,

the caster **150** is fastened to be unidirectionally biased and may rotate below the elastic supporter **140** by 360 degrees or a limited range of less than 360 degrees.

[0040] The central rod unit **110** has a duplex structure. Namely, a central cylinder **112** that is hollow is provided, and sliding rods **114** are inserted into both sides of the central cylinder **112**. The sliding rods **114** may move along an inner hole and may mutually move lengthwise to the central cylinder **112**.

[0041] Also, a tension spring **116** is provided between the sliding rods **114**. The tension spring **116** is coupled with an inner end of the sliding rod **114** and pulls the sliding rod **114** inwardly. Though the tension spring **116** is used in the present embodiment, according to other embodiments of the present invention, a compression spring may be interposed to provide repulsive force to push a sliding rod or a spring is installed between both ends of a central cylinder and an inner end of a sliding rod to provide repulsive force to push the sliding rod inwardly.

[0042] Referring to FIGS. **1** through **3**, a rotational joint **132** is installed to the both ends of the central rod unit **110**. The rotational joint **132** is for connecting the central rod unit **110** to the footplate **120** and the footplate **120** can rotate and twist with respect to the central rod unit **110** by the rotational joint **132**. The rotational joint **132** is installed to an end of the sliding rod **114** and may rotate on a longitudinal axis X of the central rod unit **112**. In this case, a torsion spring may be installed between the central rod cylinder **112** and the rotational joint **132**, and a restoring force may be continuously provided by using the torsion spring so that the rotational joint **132** may return to an original position.

[0043] A hole vertically penetrating the rotational joint **132** is formed, and a hole vertically penetrating an elevation joint **134** installed to the footplate **120** is formed. The rotational joint **132** may be coupled with the elevation joint **134** by a vertically penetrating pin and may rotate on the pin. Similarly, a pin hole penetrating the elevation joint **134** from a right and a left is formed, and the elevation joint **134** is installed to the footplate **120** to vertically rotate.

[0044] Similar to the central cylinder **112** and the rotational joint **132**, a torsion spring may be installed between the rotational joint **132** and the elevation joint **134**, and a torsion spring may be installed between the elevation joint **134** and the footplate **120**. Each of the joints may have a restoring force to maintain an original position by the torsion spring. Therefore, a user may maintain a stable posture while freely moving both feet.

[0045] Though different depending upon a situation, the rotational joint **132** may bidirectionally twist in a boundary angle range of less than approximately 25 degrees on the longitudinal axis X of the central rod unit **110**. In this case, the boundary angle range may be controlled to be an angle of 25 degrees or less, depending upon an intention of a designer. The footplate **120** may bidirectionally rotate vertically in a boundary angle range of less than approximately 20 degrees on a horizontal axis Z around the rotational joint **132** and may rotate in both right and left directions in a boundary angle range of less than approximately 90 degrees on a vertical axis Y.

[0046] Though the central rod unit **110** has a structure elastically expanding and contracting in the present embodiment, depending upon a situation, the central rod unit **110** may be fastened to the sliding rod **114** by a pin or other fixtures. This may be applied or used by a selection of the designer or the user, and the user may fix a length of the central rod unit **110** to suit a body of the user.

[0047] Referring to FIG. **2**, the caster **150** includes a wheel **156**, and the wheel **156** includes a wheel connecting portion **154** unidirectionally biased with respect to a rotation axis W of the caster **150**. The caster **150** includes a footplate fixture **152** including a bearing, the wheel connecting portion **154** formed below the footplate fixture **152**, and the wheel **156**. Since the wheel **156** is unidirectionally biased, the wheel **156** is disposed opposite to a progressive direction of the caster **150**. Since a position of the wheel **156** is passively determined by the progressive direction of the caster **150**, a movement of the caster **150** and the skateboard **100** is not disturbed. Also, since each of two casters **150** connected to one footplate **120** independently rotate, movements of the two casters **150** do not interfere with each other.

[0048] FIG. **4** is a partial enlarged view illustrating the caster **150** of FIG. **1**.

[0049] Referring to FIG. **4**, a wheel brake **158** is installed to the caster **150**. The wheel brake **158** is installed between the caster **150** and the elastic supporter **140** and has a structure capable of vertically rotating. Accordingly, when the user pushes a rear portion of the footplate **120** to tilt the footplate **120** and the elastic supporter **140** backwardly, a bottom of the wheel brake **158** may touch the ground and may generate a resisting force. The user may use a part or an entirety of the wheel brake **158** of the footplate installed on a front and a rear of the skateboard **100** to stop or to control a speed of the skateboard **100**.

[0050] FIG. **5** is a partial enlarged view illustrating another caster similar to the caster of FIG. **4**.

[0051] Referring to FIG. **5**, a wheel brake **159** also has a structure capable of vertically moving. However, friction surface of the wheel brake **159** is with an outer circumferential surface of the wheel **156** instead of the ground. The user may closely make contact with the wheel brake **159** to the wheel **156** by tilting the footplate **120**. The wheel brakes **158** and **159** shown in FIGS. **4** and **5** may be applied to the skateboard **100**, respectively, and may be used together with each other.

[0052] Referring to FIGS. **2** and **3**, the suspension **142** may be formed of a compression spring or an elastic material capable of being used in an identical manner as the compression spring and may be disposed on either side between the elastic supporter **140** and the footplate **120** to support right and left tilting of the user. The suspension **142** may be vertically compressed and may bend towards the right and left or front and back. The user may naturally control the tilt right and left and the tilt front and back by the suspension **142**. For example, the user may operate the wheel brake **158** by tilting the footplate **120** opposite to the progressive direction. The wheel brake **158** is fastened to a top of the wheel **156** and is connected to pivot at a certain angle.

EMBODIMENT 2

[0053] FIG. **6** is a perspective view illustrating a skateboard according to a second embodiment of the present invention, and FIG. **7** is a perspective view illustrating another state of the skateboard of FIG. **6**.

[0054] Referring to FIGS. **6** and **7**, a skateboard **200** includes a central rod unit **210**, footplates **220** installed to both ends of the central rod unit **210**, and casters **250**. Two footplates **220** are installed to the both ends of the central rod unit **210** to rotate right and left, and the casters **250** are

provided below the footplates **220**. Each caster **250** is a directional caster unidirectionally biased and may independently rotate below the footplate **220**. A range of the rotation may be variously controlled to be 360 degrees or a limited range of less than 360 degrees.

[0055] Similar to the first embodiment, the central rod unit **210** has a duplex structure. Namely, a central cylinder **212** that is hollow is provided, and sliding rods are inserted into both sides of the central cylinder **212** (refer to **214** of FIG. **9**). The sliding rods may move along an inner cavity of the central cylinder **212**, respectively, and may mutually move in a direction of a length of the central cylinder **212**. Also, a tension spring is provided between the sliding rods. The tension spring is coupled with an inner end of the sliding rod and pulls the sliding rod inwardly.

[0056] As illustrated, a central footplate **218** is installed above the central rod unit **210**. The central footplate **218** may be used for temporarily putting a foot on and may protect the central rod unit **210**.

[0057] Rotational joints **232** are installed to the both ends of the central rod unit **210**, respectively. The rotational joint **232** is for connecting the central rod unit **210** with the footplate **220**. The footplate **220** can rotate and twist with respect to the central rod unit **210**. The rotational joint **232** is installed to an end of the sliding rod and may twist on a longitudinal axis X of the central rod unit **210**. In this case, a torsion spring may be additionally installed between the central cylinder **212** and the rotational joint **232** and a restoring force may be continuously provided so that the rotational joint **232** may return to an original position by using the torsion spring.

[0058] Also, a hole vertically penetrating the rotational joint **232** is formed, and a hole vertically penetrating a connecting joint **234** installed to the footplate **220** is formed. The rotational joint **232** and the connecting joint **234** may be coupled with each other by a pin vertically penetrating the rotation joint **232** and the connecting joint **234** to rotate on it.

[0059] Similar to the central cylinder **212** and the rotational joint **232**, a torsion spring may be installed between the rotational joint **232** and the connecting joint **234**. Each of the joints may have a restoring force to return to an original position by the torsion spring. Accordingly, the user may maintain a stable posture while elastically moving both feet.

[0060] Referring to FIG. **6**, the footplates **220** are disposed perpendicular to and on right and left sides of the central rod unit **210**. Also, four casters **250** are disposed parallel to the longitudinal axis X of the central rod unit **210**. This corresponds to when the user puts his or her feet parallel to each other and moves in right or left directions of the user's body.

[0061] Referring to FIG. **7**, the footplates **220** are disposed lengthwise, parallel to each other on both sides of the central rod unit **210**. However, in this case, the four casters **250** are disposed parallel to the longitudinal axis X of the central rod unit **210**, which corresponds to when the user put his or her feet parallel to a progressive direction and moves forward.

[0062] In this case, for example, the user may dispose both footplates in the shape of T by vertically disposing his or her right foot sideways to the progressive direction, to be vertical to his or her left foot disposed in a front and may dispose the footplates in the shape of V by inwardly drawing heels of both feet. In any case, the casters **250** may become oriented parallel to the progressive direction and the user may maintain a comfortable posture.

[0063] Also, though not shown, the user may install a binding device for fixing both feet or one foot to a footplate. The binding device may strongly bind the foot with the footplate, and various binding devices such as a strong binding device used for a snowboard or a simple binding device easily securing and releasing the foot may be used.

[0064] FIG. **8** is a perspective view illustrating still another state of the skateboard of FIG. **6**, and FIG. **9** is a side view illustrating the skateboard of FIG. **6**.

[0065] Referring to FIG. **8**, the user may put the both feet on the footplate **220** and may move forward. The user may move the right foot forwardly by using the left foot as an axis, and the footplate **220** may move forward together with the right foot. In this case, the casters **250** are disposed parallel to the progressive direction, and the user may alternately move each foot forward similar to walking.

[0066] Referring to FIG. **9**, in the present embodiment, the central rod unit **210** has the duplex structure, and a length of the central rod unit **210** may be extended and contracted while a sliding rod **214** slides in the central cylinder **212**. Particularly, as shown in FIG. **8**, the right footplate **220** moves forward and the central rod unit **210** is extended more than the original length, thereby easily moving forward.

[0067] Also, a tension spring **216** may be installed between the sliding rods **214** so that the central rod unit **210** may return to the original length. The tension spring **216** is coupled with inner ends of the sliding rods **214** to pull the sliding rods **214** inwardly after the sliding rods **214** are extended, thereby enabling the central rod unit **210** to be short again without the user directly pulling the sliding rods **214**. Generally, since the operation of spreading and swinging legs is easy and the operation of putting the legs together is difficult and unnatural, swinging of the legs may be naturally performed by using the tension spring **216**.

[0068] Referring to FIG. **9**, the caster **250** includes the wheel **256**, and the wheel **256** includes the wheel connecting portion **254** unidirectionally biased with respect to the rotation axis W of the caster **250**. The caster **250** includes a footplate fixture **252** including a bearing, the wheel connecting portion **254** formed below the footplate fixture **252**, and the wheel **256**. Since the wheel **256** is unidirectionally biased, the wheel **256** is disposed opposite to a progressive direction of the caster **250**. Since a position of the wheel **256** is passively determined by the progressive direction of the caster **250**, a movement of the caster **250** and the skateboard **200** do not interfere with each other. Also, since each of the two casters **250** connected to a single footplate **220** independently rotate, movements of the two casters **250** do not interfere with each other.

[0069] FIG. **10** is a top view illustrating the skateboard of FIG. **6** rotating in place.

[0070] Referring to FIG. **10**, the central rod unit **210** and the footplate **220** are disposed in the shape of an H, and four casters **250** are disposed toward a direction to rotate in place. Accordingly, the casters **250** may rotate on a point where rotation axes of the wheels **256** are gathered. Also, a rotation of 360 degrees in place may be performed, which is impossible by conventional skateboards or similar products. Accordingly, the skateboard **200** according to the present embodiment may perform relatively sharp turns and may stop by using rotation, similar to a roller skate. This is possible because each of the casters **250** can independently rotate and is impossible to embody in a conventional skateboard whose two wheels are fixed to be parallel to each other or a snake board whose two wheels are disposed in one line.

[0071] Referring to FIG. **9**, the wheel brake **258** is installed to the caster **250**. The wheel brake **258** is installed to the wheel connecting portion **254** by interposing the rotation axis of the wheel **256** therebetween and has a structure capable of vertically rotating. Accordingly, when the user pushes a rear portion of the footplate **220** to tilt the footplate **220**, a bottom of the wheel brake **258** may touch the ground and may generate a resisting force. The user may use a part or an entirety of the wheel brake **258** of the footplate installed in the front and the rear to stop the skateboard **200** or to control speed of the skateboard **200**.

EMBODIMENT 3

[0072] FIG. **11** is an enlarged side view illustrating a skateboard according to a third embodiment of the present invention, and FIG. **12** is an enlarged side view illustrating the skateboard of FIG. **11** in a state of progress.

[0073] Referring to FIGS. **11** and **12**, a skateboard **300** includes a central rod unit **310**, footplates **320** installed to both ends of the central rod unit **310**, and a plurality of casters **350**. Two footplates **320** are installed to the both ends of the central rod unit **310** to rotate right and left, and the plurality of casters **350** are provided below the footplates **320**. Each caster **350** is a directional caster unidirectionally biased and may independently rotate below the footplate **320**. A range of the rotation may be variously controlled to be 360 degrees or a limited range of less than 360 degrees.

[0074] Rotational joints **332** are installed to the both ends of the central rod unit **310**, respectively. The rotational joint **332** is for connecting the central rod unit **310** with the footplate **320**. The footplate **320** has a degree of freedom to rotate and twist with respect to the central rod unit **310**. The rotational joint **332** is installed to an end of the sliding rod **314** and may twist on a longitudinal axis of the central rod unit **310**. In this case, a torsion spring may be additionally installed between the central cylinder **312** and the rotational joint **332**, and a restoring force may be continuously provided so that the rotational joint **332** may return to an original position by using the torsion spring. Also, a hole vertically penetrating the rotational joint **332** is formed, and a hole vertically penetrating a connecting joint **334** installed to the footplate **320** is formed. The rotational joint **332** and the connecting joint **334** may be coupled with each other by a pin vertically penetrating the rotation joint **332** and the connecting joint **334**, and may rotate on the pin.

[0075] The caster **350** is installed below the footplate **320** and includes a footplate fixture **352**, an elastic connecting portion **353**, a wheel connecting portion **354**, a wheel **356**, and a wheel brake **358**. The wheel **356** is installed to the wheel connecting portion **354** and is unidirectionally biased with respect to a rotation axis W of the caster **350**. The footplate fixture **352** includes a bearing and may rotate 360 degrees or in a limited range of less than 360 degrees with respect to the footplate **320**. The elastic connecting portion **353** including a spring is provided below the footplate fixture **352**. Since a position of the wheel **356** is passively determined by the progressive direction of the caster **350**, a movement of the caster **350** and the skateboard **300** do not interfere with each other. Also, since each of two casters **350** connected to one footplate **320** independently rotates, movements of the two casters **350** do not interfere with each other.

[0076] The caster **350** freely rotates regardless of other casters to provide a sufficient driving force in a progressive direction, but in actually may interfere with forward progress. Accordingly, via the elastic connecting portion **353**, the caster **350** may bend opposite to a progressive direction of the caster **350** and the plurality of casters **350** may be substantially disposed to be parallel to the progressive direction by slightly limiting a rotation of the caster **350**. Accordingly, the user may obtain a desired driving force by alternating each foot and may move forward and backward as well as right and left of the user's body. Accordingly, the user may move forward by moving as when walking. In this case, though the wheel connecting portion **354** also includes a bearing and may rotate 360 degrees or in a limited range of less than 360 degrees with respect to the elastic connecting portion **353**, since rotation is limited when the elastic connecting portion **353** bends, the wheel connecting portion **354** only rotates right and left in a certain range.

[0077] FIG. **13** is an enlarged side view illustrating another state of progress of the skateboard of FIG. **11**.

[0078] Referring to FIG. **13**, as shown in FIG. **8**, the user may move forward, and the casters **350**, may bend opposite to the progressive direction while the user moves forward. Accordingly, the user may get a sufficient driving force when moving forward instead of moving right and left.

[0079] Accordingly, the user may move forward while putting both feet on each respective footplate **320**. The user may advance the right foot by using the left foot as an axis, and the footplate **320** may also move forward together with the right foot. In this case, the casters **350** are disposed parallel to the progressive direction, and the user may alternate advancing each foot as when walking.

[0080] A wheel brake may be installed to the caster **350**. Particularly, the wheel brake may be installed to the wheel connecting portion **354** by interposing the rotation axis of the wheel **356** therebetween and has a structure capable of vertically rotating. Accordingly, when the user pushes a rear portion of the footplate **320** to tilt the footplate **320**, a bottom of the wheel brake **358** may touch the ground and may generate a resisting force. The user may use a part or an entirety of the wheel brake of the footplate **320** installed in a front and a rear to stop the skateboard **300** or to control a speed of the skateboard **300**.

[0081] In addition, a movement direction of the skateboard **300** may be different according to where the user puts a centroid or a direction of force. Namely, according to the centroid or the direction of force, a direction of a directional caster may be changed and may rotate by at most 90 degrees horizontally to a central rod unit and a movement of a footplate may apply elasticity to the speed of the skateboard **300**.

[0082] Also, when the user turns the user's body around a center of both footplates, each of the directional casters tends to move outwardly due to centrifugal force, thereby rotating 360 degrees in place. The user may go downhill by positioning both feet and the body right or left and may rotate forming a circle while inwardly drawing heels to the body and tilting the body backwardly. Also, when the user makes the shape of T by twisting one foot by 90 degrees while standing straight up, it is easy to go over an obstacle or a curb between a road and a sidewalk.

[0083] FIG. **14** is an enlarged side view illustrating a skateboard according to another embodiment similar to the third embodiment of the present invention.

[0084] Referring to FIG. **14**, the skateboard includes the central rod unit **310**, the footplates **320** installed to both ends of the central rod unit **310**, and the casters **351**. Two footplates **320** are installed to the both ends of the central rod unit **310** to

rotate right and left, and the casters **351** are provided below the footplates **320**. The caster **351** is a directional caster unidirectionally biased and may independently rotate below the footplate **320**. A range of the rotation may be variously controlled to be 360 degrees or a limited range of less than 360 degrees. The rotational joint **332**, the central cylinder **312**, and the sliding rod **314** may be described with reference to the description and the drawings of the previous embodiments.

[0085] The caster **351** is installed below the footplate **320** and includes the footplate fixture **352**, the elastic connecting portion **353**, the wheel connecting portion **354**, the wheel **356**, and the wheel brake **358**. Only, unlike the previous embodiment, there is no bearing between the wheel connecting portion **335** and the elastic connecting portion **353**. Accordingly, the footplate fixture **352** including the bearing may rotate 360 degrees or in a limited range of less than 360 degrees, and the wheel connecting portion **355** has rotation ability relatively more limited than the elastic connecting portion **353**. Depending upon another embodiment, an elastic connecting portion may be twisted or deformed itself, thereby giving rotation ability in a limited range.

[0086] Since a position of the wheel **356** is passively determined by the progressive direction of the caster **351**, a movement of the caster **351** and the skateboard **300** do not interfere with each other. Also, since each of the two casters **351** connected to one footplate **320** independently rotates, movements of the two casters **351** do not interfere with each other. Though limited rotation ability of the wheel connecting portion **355** may limit free rotation of the skateboard **300**, a sufficient driving force with respect to the progressive direction may be provided. Via the elastic connecting portion **353**, the caster **351** may bend opposite to a movement direction of the caster **351**. A driving force generated by the casters **351** may be improved by slightly limiting rotation of the casters **351**.

[0087] FIG. **15** is an enlarged side view illustrating a skateboard according to still another embodiment similar to the third embodiment of the present invention.

[0088] Referring to FIG. **15**, the skateboard includes the central rod unit **310**, the footplates **320** installed to both ends of the central rod unit **310**, and casters **350'**. Two footplates **320** are installed to the both ends of the central rod unit **310** to rotate right and left, and the casters **350'** are provided below the footplates **320**. The caster **350'** is a directional caster unidirectionally biased and may independently rotate below the footplate **320**. A range of the rotation may be variously controlled to be 360 degrees or a limited range of less than 360 degrees. The rotational joint **332**, the central cylinder **312**, and the sliding rod **314** may be described with reference to the description and the drawings of the previous embodiments.

[0089] The caster **350'** is installed below the footplate **320** and includes the footplate fixture **352**, an inclined connecting portion **353'**, the wheel connecting portion **354**, the wheel **356**, and the wheel brake **358**. However, unlike the previous embodiment, the inclined connecting portion **353'** has a top surface and a bottom surface not parallel to each other but inclined to each other. Accordingly, when a spring is not used, the wheel connecting portion **354** and the wheel **356** are already bending respective to the footplate **320**. However, the inclined connecting portion **353'** may rotate by being connected to the footplate fixture **352** and the wheel connecting portion **354**, respectively.

[0090] In the present embodiment, since a position of the wheel **356** is passively determined by the progressive direction of the caster **350'**, a movement of the caster **350'** and the skateboard **300** does not interfere with each other. Also, since each of the two casters **350'** connected to one footplate **320** independently rotates, movements of the two casters **350'** do not interfere with each other.

[0091] Although a few embodiments of the present invention have been shown and described, the present invention is not limited to the described embodiments. Instead, it would be appreciated by those skilled in the art that changes may be made to these embodiments without departing from the principles and spirit of the invention, the scope of which is defined by the claims and their equivalents.

INDUSTRIAL APPLICABILITY

[0092] The skateboard according to an exemplary embodiment of the present invention may move forward and backward as well as right and left of a user by generating a sufficient driving force and has three or four casters independently rotating to reduce a turn radius.

[0093] Also, since a footplate may move toward a direction different from a direction of a caster while driving, a direction of the footplate may be easily changed. For example, it is possible to enjoy boarding in various positions in the shapes of H, II, T, and V. Also, convenience of the user may be improved by maintaining a comfortable boarding posture.

[0094] Also, an interval between footplates may be easily adjusted to suit a physical body of the user. Particularly, the interval between the footplates may be reduced in the operation of moving forward as when walking, thereby naturally moving forward.

[0095] Also, when going downhill or in a hazardous situation, the skateboard may safely stop, speed of the skateboard may be easily controlled, and it is easy to avoid a hazard by easily turning.

1. A skateboard comprising:
- a central rod unit;
- a first footplate installed to an end of the central rod unit to be rotatable on a vertical axis;
- a plurality of first casters installed to be independently rotatable on the first footplate;
- a second footplate installed to another end of the central rod unit to be rotatable on another vertical axis; and
- a plurality of second casters installed to be independently rotatable on the second footplate.

2. The skateboard of claim **1**, wherein the central rod unit is formed in a duplex structure capable of expanding and contracting lengthwise.

3. The skateboard of claim **2**, wherein the central rod unit comprises:
- a central hollow cylinder;
- two slide rods contained by both ends of the central hollow cylinder and sliding lengthwise to the central hollow cylinder; and
- a spring coupled with the slide rods to provide elasticity.

4. The skateboard of claim **1**, wherein the first and second footplates twist in a certain angle range around a longitudinal axis of the central rod unit and have a restoring force to return an original position against the twisting.

5. The skateboard of claim **4**, wherein:
- rotating joints are installed to the both ends of the central rod unit, the rotating joints having the restoring force against the twisting; and

the first and the second footplates are installed to each of the rotating joints to be rotatable on the vertical axis, respectively.

6. The skateboard of claim **1**, wherein the plurality of first casters and the second casters comprise:

a footplate fixture installed on a bottom surface of the first and second footplate to be rotatable;

an elastic connecting portion connected to a bottom of the footplate fixture and bending in a predetermined range;

a wheel connecting portion connected to a bottom of the elastic connection portion; and

a caster wheel installed to the wheel connecting portion to be rotatable,

wherein the caster wheel rotates in a position biased against a pivot axis of the footplate fixture.

7. The skateboard of claim **6**, wherein the wheel connecting portion is installed on a bottom surface of the elastic connecting portion to be rotatable.

8. The skateboard of claim **1**, wherein the plurality of first casters and the plurality of second casters comprise:

a footplate fixture installed on a bottom surface of the first or second footplate to be rotatable;

a connecting portion connected to a bottom of the footplate fixture to be rotatable;

a wheel connecting portion connected to a bottom of the connecting portion; and

a caster wheel installed to the wheel connecting portion to be rotatable,

wherein the caster wheel rotates in a position biased against a pivot axis of the footplate fixture.

9. The skateboard of claim **8**, wherein the wheel connecting portion is installed on a bottom surface of the connecting portion to be rotatable.

10. The skateboard of claim **1**, wherein the plurality of first casters and the plurality of second casters comprise:

a footplate fixture installed on a bottom surface of the first or second footplate to be rotatable;

a wheel connecting portion connected to a bottom of the footplate fixture;

a caster wheel installed to the wheel connecting portion to be rotatable; and

a wheel brake provided adjacent to the caster wheel and generating resistance against driving according to an inclination of the footplate.

11. The skateboard of claim **1**, wherein a central footplate is installed on a top surface of the central rod unit.

12. A skateboard comprising:

a central rod unit;

two footplates installed to both ends of the central rod unit to be rotatable;

elastic supporters disposed at bottoms of the footplates, respectively, and including a suspension supporting a bottom surface of the footplates; and

a plurality of directional casters installed to the elastic supporters to be independently rotatable, respectively.

13. The skateboard of claim **12**, wherein:

a rotating joint is installed on at least one of the both ends of the central rod unit, the rotating joint having a restoring force against a twist between the rotating joint and the central rod unit;

the footplate installed to the rotating joint rotates on a vertical axis and a horizontal axis; and

the footplate pivots to an up and a down or a right and a left with respect to the central rod unit.

14. The skateboard of claim **13**, wherein the rotating joint twists in both directions in a boundary angle range of less than 25 degrees with respect to a longitudinal axis of the central rod unit, pivots to an up and a down with respect to both directions in a boundary angle range of less than 20 degrees on the horizontal axis, and pivots right and left with respect to both directions in a boundary angle range of less than 90 degrees on the vertical axis.

15. The skateboard of claim **12**, wherein the central rod unit has a double pipe structure capable of expanding and contracting longitudinally, and includes a fixture for fixing a controlled length.

16. The skateboard of claim **12**, wherein the central rod unit has a double pipe structure capable of expanding and contracting longitudinally, in which a compression spring or a tension spring is installed for providing a restoring force against the expanding and contracting of the central rod unit.

17. The skateboard of claim **12**, wherein a wheel brake is installed to the directional caster, which is provided adjacent to a wheel and generates resistance against driving according to an inclination of the footplate.

18. The skateboard of claim **17**, wherein the wheel brake is connected to a top of the wheel to pivot at an angle of a certain degree.

19. A skateboard comprising:

a central rod unit formed in a double pipe structure capable of elastically expanding and contracting lengthwise;

two footplates installed on both ends of the central rod unit to pivot on a vertical axis and a horizontal axis, twisting in a certain boundary angle range on a longitudinal axis of the central rod unit, and having a restoring force to return to an original position against the pivoting on the horizontal axis and vertical axis, and the twisting; and

casters including at least one footplate fixture installed on a bottom surface of each of the footplates to be rotatable, an elastic connecting portion connected to a bottom of the footplate fixture and bending in a predetermined range, a wheel connecting portion installed on a bottom of the elastic connecting portion to be rotatable, and a caster wheel installed to the wheel connecting portion to be rotatable, the caster wheel rotating in a position biased against a pivot axis of the footplate fixture.

20. The skateboard of claim **19**, wherein the central rod unit comprises:

a central hollow cylinder;

two slide rods contained by both ends of the central hollow cylinder and sliding lengthwise to the central hollow cylinder; and

a spring coupled with the slide rods to provide elasticity.

21. The skateboard of claim **19**, further comprising a wheel brake installed to a directional caster, which is provided adjacent to a wheel and generates resistance against driving according to an inclination of the footplate.

22. The skateboard of claim **19**, wherein a central footplate is installed on a top surface of the central rod unit.

23. A skateboard comprising:

a central rod unit formed in a double pipe structure capable of elastically expanding and contracting lengthwise;

two footplates installed on both ends of the central rod unit to pivot on a vertical axis and a horizontal axis, twisting in a certain boundary angle range on a longitudinal axis of the central rod unit, and having a restoring force

against the pivoting on the horizontal axis and vertical axis, and the twisting to return to an original position; and

a plurality of casters including at least one footplate fixture installed on a bottom surface of each of the footplates to be rotatable, an inclination connecting portion connected to a bottom of the footplate fixture, the inclination connecting portion whose bottom surface is inclined, a wheel connecting portion installed on a bottom of the inclination connecting portion to be rotatable, and a caster wheel installed to the wheel connecting portion to be rotatable.

* * * * *