Oct. 19, 1943. W. J. KNOCHEL ET AL 2,332,090

ELECTRICAL CONTACT MEMBER

Filed March 6, 1942

Fig. 1.

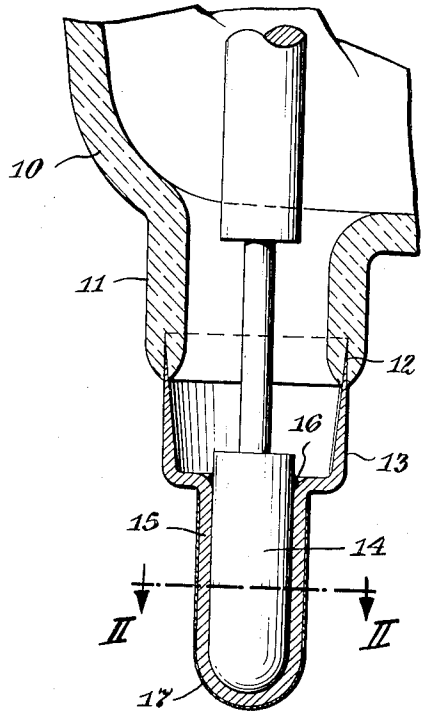

Fig. 2.

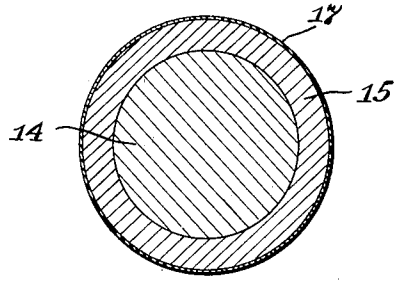

INVENTORS.
W. J. KNOCHEL.
S. J. CHERRY.
BY J. W. Greenlowe
ATTORNEY

Patented Oct. 19, 1943 2,332,090

UNITED STATES PATENT OFFICE

2,332,090

ELECTRICAL CONTACT MEMBER

William J. Knochel, Irvington, and Sidney John Cherry, East Orange, N. J., assignors to Westinghouse Electric & Manufacturing Company, East Pittsburgh, Pa., a corporation of Pennsylvania

Application March 6, 1942, Serial No. 433,560

1 Claim. (Cl. 250—27.5)

This invention relates to electrical contact members, and particularly to a member which is subjected to heat in manufacture and for use, such as contact prongs of an electronic device.

Copper is a most popular material for use in conducting electricity or for making connection between conductors. While copper is an excellent conductor, copper oxide is a poor conductor. Copper oxide forms readily on copper, especially when the copper is heated. Contact members of copper which are subject to heat either while in process of manufacture or attachment or while in use, have to be cleaned to remove the copper oxide. The time and difficulty involved in that operation, as well as the wearing-away of the member, represent material losses.

An object of the present invention is to prevent the losses above mentioned encountered in construction and use of contact members.

Another object of the present invention is to provide a structure wherein the contact member is maintained inherently in good conducting condition on its contact surface.

A further object is to prevent formation of a non-conductive or highly resistant oxide, particularly copper oxide on a contact member contact surface.

Still further objects of the invention will appear as the description progresses both by direct statement thereof and by implication from the context.

Referring to the accompanying drawing in which like numerals of reference indicate similar parts throughout the several views;

Figure 1 is a sectional view of our invention in connection with an electronic device a portion of the envelope for which is also shown in section; and

Figure 2 is a cross-section on line II—II of Fig. 1.

In the specific embodiment of the invention illustrated in said drawing, the reference numeral 10 designates a glass or other envelope of an electronic device. Where electric lead-in connection is to be made, the envelope is provided with a reduced neck 11 at the outer end rim of which is sealed therein a peripheral marginal end 12 of a thimble 13. This thimble constitutes the specific illustration here selected as exemplary of our improved contact member and with associated metallic parts is commonly termed an attaching prong. Within the thimble is a metallic pin 14 of suitable material and configuration and preferably of a size to fill the outermost and diametrically reduced end portion 15 of the thimble. Suitable solder or other means 16 is shown physically and electrically joining the pin and thimble.

It is the outside surface of the said reduced end portion which is exposed to the atmosphere which has been troublesome to maintain clean for electrical contact purposes. Inasmuch as the said thimble is made of copper, and as copper readily oxidizes during sealing, exhaust, test and life of the electronic device, and copper oxide is an exceedingly poor conductor both of electricity and heat, its presence is highly detrimental. Heretofore much time, effort and material have been consumed in cleaning the oxide from the copper surface, not only at time of manufacture but frequently during use of the device.

According to the present invention, the exterior of the reduced portion of the thimble is covered with a conductive material. If that material is one on which an oxide or other readily forming coating will result in manufacture or use, selection is made of a material of which the compound will be adequately conductive. By preference, we use a noble metal such as silver or gold to form a closely fitting shell or coating 17. Specifically, the preferred material and method is silver, plated upon the thimble electrically or otherwise. Even though this silver plate is subjected to a high temperature and forms an oxide, its oxide is not objectionable since silver oxide has high electrical and heat conductivity. Consequently the silver plated thimble, whether the coating remains on its surface as silver or as silver oxide, is satisfactory for electrical and heat conductivity and overcomes the formation and presence of copper oxide on the contacting surface.

We claim:

In combination with an evacuated envelope, a solid metallic pin within said envelope and subject to the vacuum therein, a copper thimble sealed to said envelope and also subject at its interior to the vacuum of the envelope and thereby kept from oxidizing on its interior surface, said thimble having a diametrically reduced portion and said pin having surface contact with the interior of the reduced portion of said thimble and the contacting surfaces prevented from oxidizing by presence of the vacuum, and a coating of noble metal on the entire exterior surface of the reduced portion of said thimble for preventing formation of copper oxide thereon and for obtaining unimpaired electrical connection to any part of the reduced portion and from the outer surface of said coating to the said pin.

WILLIAM J. KNOCHEL.
SIDNEY JOHN CHERRY.