March 18, 1930. J. R. KINNEY 1,751,006

PUMP FOR MIXING OIL AND AIR

Filed Sept. 28, 1928 5 Sheets-Sheet 1

Fig. 1.

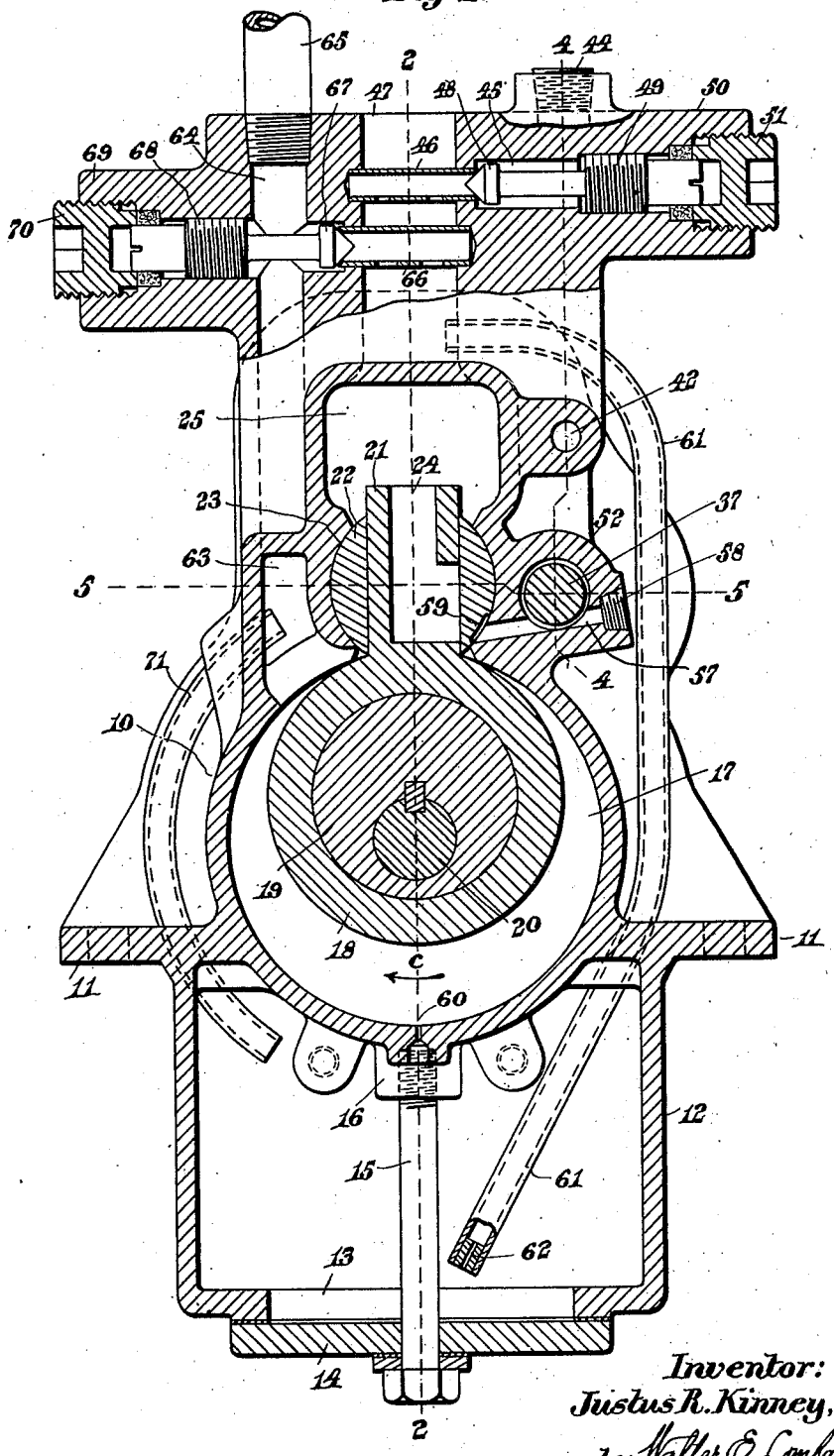

Inventor:
Justus R. Kinney,
by Walter E. Lombard,
Atty.

March 18, 1930. J. R. KINNEY 1,751,006

PUMP FOR MIXING OIL AND AIR

Filed Sept. 28, 1928 5 Sheets-Sheet 2

Fig. 2.

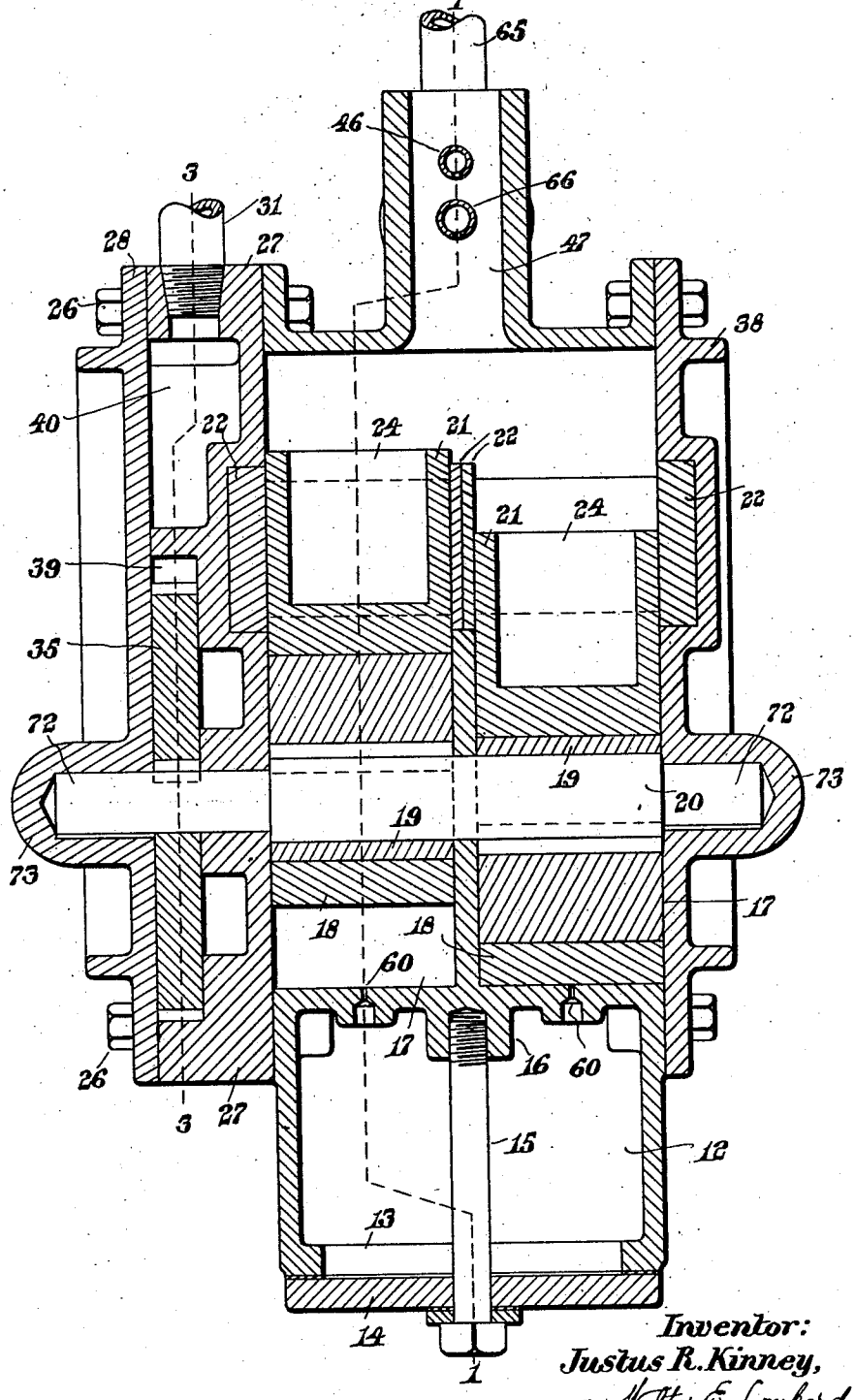

Inventor:
Justus R. Kinney,
by Walter E. Lombard,
Atty.

March 18, 1930. J. R. KINNEY 1,751,006

PUMP FOR MIXING OIL AND AIR

Filed Sept. 28, 1928 5 Sheets-Sheet 3

Fig. 3.

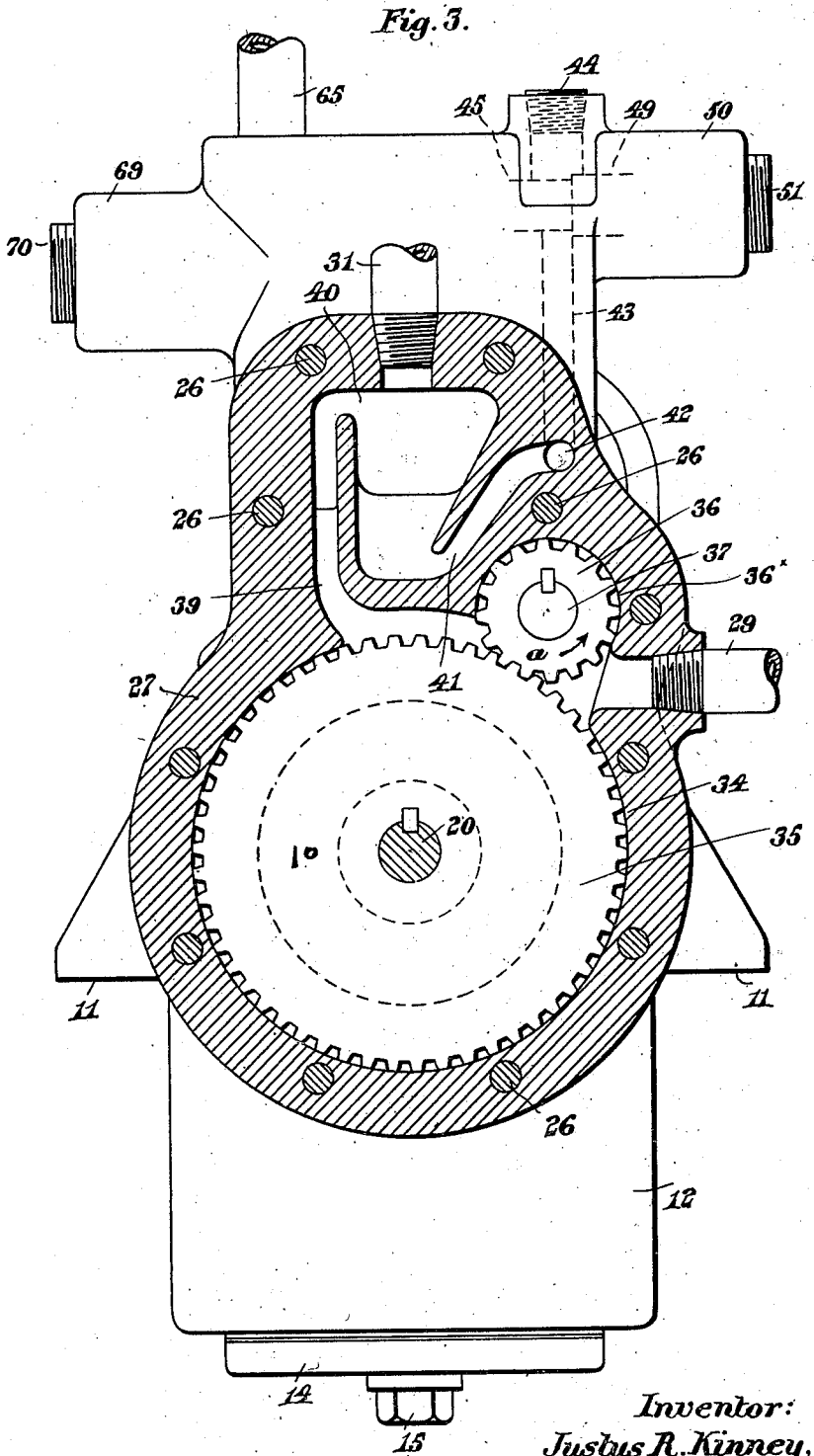

Inventor:
Justus R. Kinney,
by Walter E. Lombard, Atty.

March 18, 1930. J. R. KINNEY 1,751,006

PUMP FOR MIXING OIL AND AIR

Filed Sept. 28, 1928 5 Sheets-Sheet 4

Fig. 4.

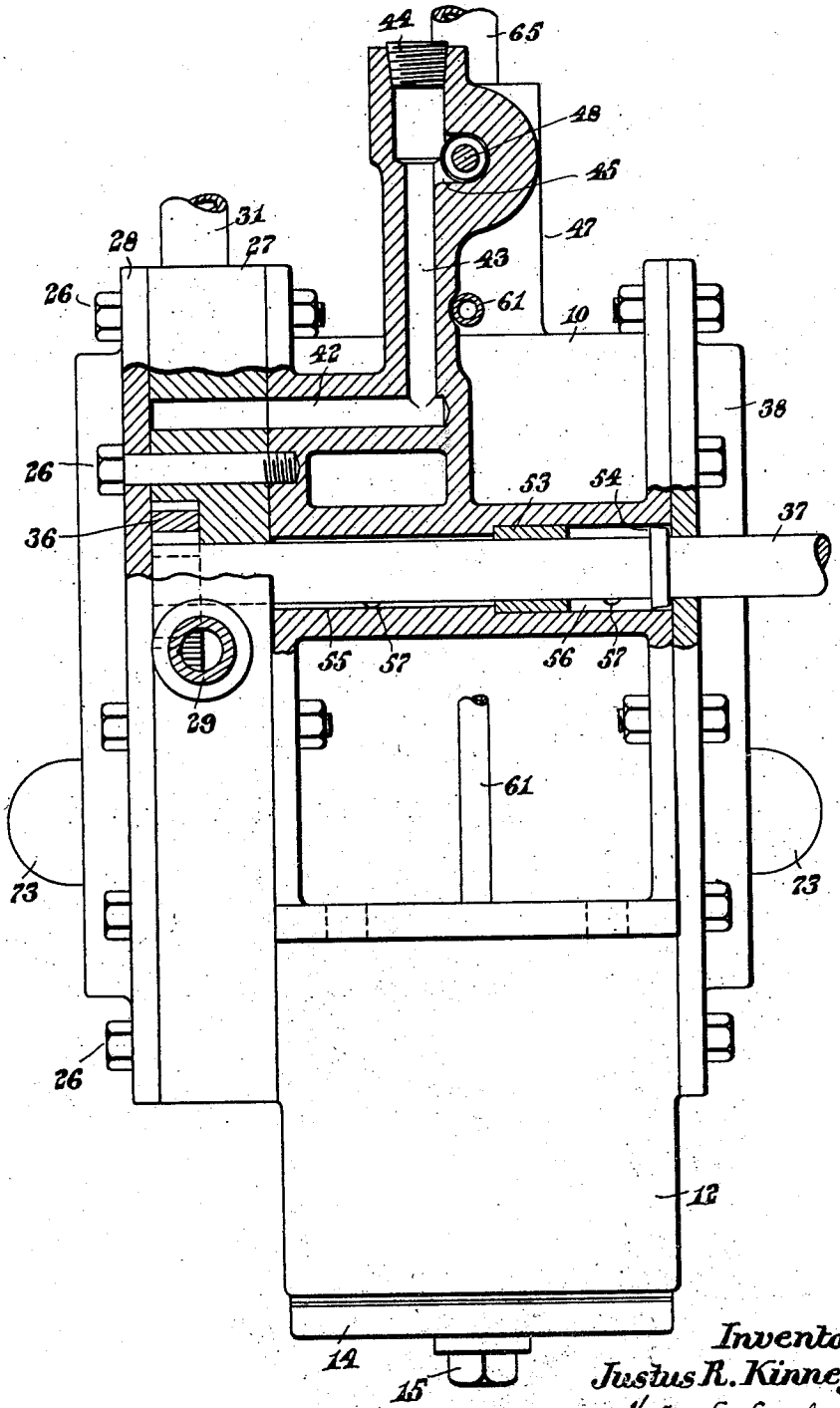

Inventor:
Justus R. Kinney,
by Walter E. Lombard.
Atty.

March 18, 1930. J. R. KINNEY 1,751,006

PUMP FOR MIXING OIL AND AIR

Filed Sept. 28, 1928 5 Sheets-Sheet 5

Fig. 6.

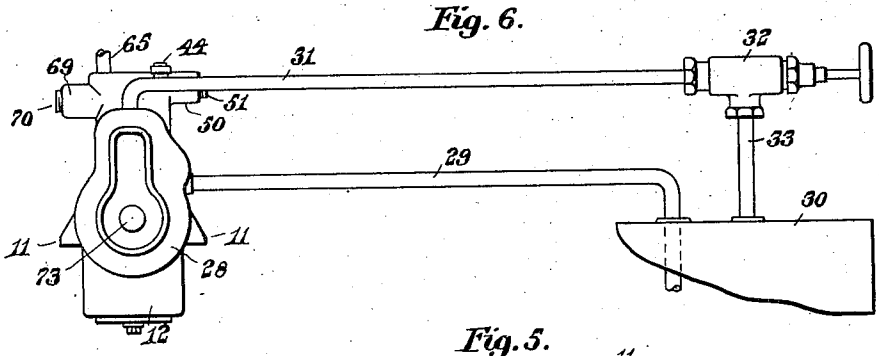

Fig. 5.

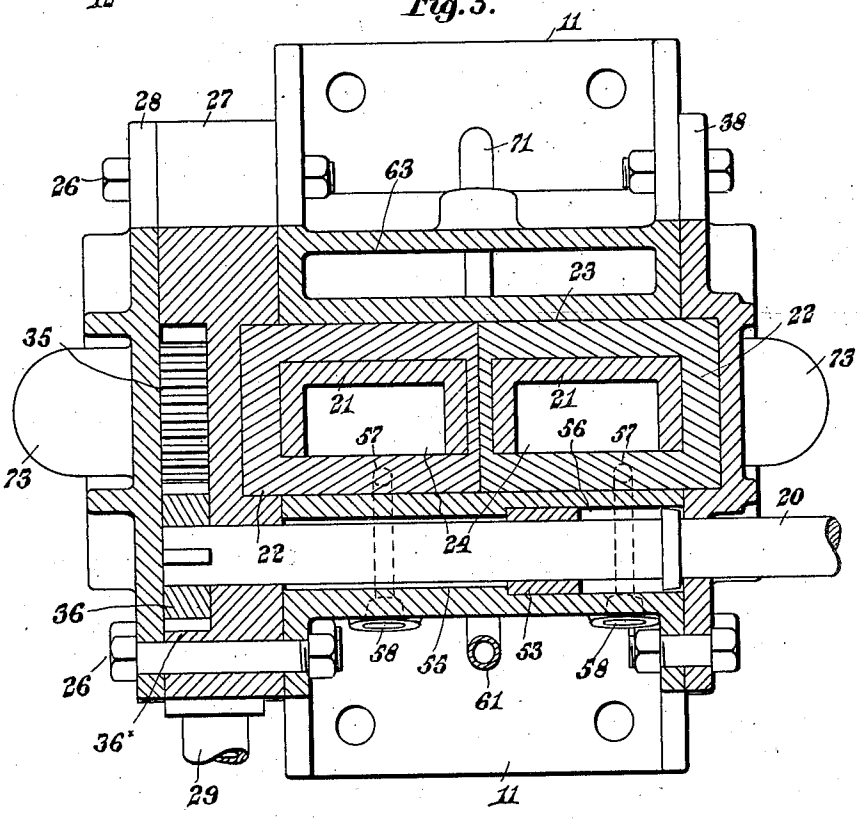

Inventor:
Justus R. Kinney,
by Walter E. Lombard,
Atty.

Patented Mar. 18, 1930 1,751,006

UNITED STATES PATENT OFFICE

JUSTUS R. KINNEY, OF JAMAICA PLAIN, MASSACHUSETTS, ASSIGNOR TO KINNEY MANUFACTURING COMPANY, OF BOSTON, MASSACHUSETTS

PUMP FOR MIXING OIL AND AIR

Application filed September 28, 1928. Serial No. 308,930.

This invention relates to pumps for mixing oil and air and is particularly adapted to provide the proper mixture of these elements preparatory to ejecting the mixture into an oil burner.

The object of the invention is to provide a pump of comparatively simple construction connected with an oil tank in such a manner that the oil in the tank may be mixed with air under compression, the surplus oil not required being returned to said tank.

This object is attained by the mechanism illustrated in the accompanying drawings.

For the purpose of illustrating the invention, one preferred form thereof is illustrated in the drawings, this form having been found to give satisfactory and reliable results, although it is to be understood that the various instrumentalities of which the invention consists can be variously arranged and organized, and the invention is not limited to the precise arrangement and organization of these instrumentalities as herein shown and described except as required by the scope of the appended claims.

Of the drawings:

Figure 1 represents a vertical section of a pump embodying the principles of the present invention, the cutting plane being on line 1, 1, on Fig. 2.

Figure 2 represents a transverse vertical section of same on line 2, 2, on Fig. 1.

Figure 3 represents a vertical section of same on line 3, 3, on Fig. 2.

Figure 4 represents an elevation of same shown partly in section on line 4, 4, on Fig. 1.

Figure 5 represents a horizontal section of same on line 5, 5, on Fig. 1, and

Figure 6 represents in diagram the connections of said pump with the main oil supply tank.

Similar characters indicate like parts throughout the several figures of the drawings.

In the drawings, 10 is the casing of an air pump having flanges 11 extending therefrom and adapted to be secured to a support therefor.

Projecting downwardly from the bottom of the casing 10 is a sump or reservoir 12. This sump has an opening 13 in the bottom thereof closed by a plate 14 retained in position by a bolt 15 threaded to a boss 16 projecting downwardly from the bottom of said casing.

The casing 10 has two cylindrical chambers 17 formed therein in each of which is an annular piston 18 mounted upon an eccentric 19 secured to and rotatable with a shaft 20.

The eccentrics 19 are oppositely disposed on said shaft 20 and keyed thereto.

Each annular piston 18 has a radial blade 21 extending therefrom through a slot in an oscillating member 22, both oscillating members 22 being mounted in a bearing 23 formed in said casing 10.

The blade 21 has a passage 24 extending from its outer end to one side face thereof as indicated in Fig. 1 of the drawings.

The outer end of this passage 24 communicates with a chamber 25 formed in the casing 10.

Secured to one end of the casing 10 by bolts 26 is the casing 27 of an oil pump having a cover plate 28 at its outer end as shown in Fig. 4, of the drawings.

From one side of the oil pump 27 extends a pipe 29 to the main supply tank 30 from the bottom of which oil is drawn through the pipe 29 into the pump 27 when the latter is operating.

From the top of the oil pump 27 extends a pipe 31 to a relief valve 32 in communication with the supply tank 30 by means of a pipe 33.

The pipe 31 takes care of any surplus oil and gas in the pump and overflows through the relief valve 32 into the tank 30.

The relief valve may be adjusted to open at any predetermined pressure.

Within the chamber 34 formed in the oil pump 27 is a gear 35 keyed to the shaft 20 and rotatable therewith, the outer ends of the teeth of said gear contacting with the cylindrical wall of said chamber.

The teeth of this gear 35 mesh with the teeth of a pinion 36 keyed to a shaft 37, one end of which extends through the cover plate 38 of the casing 10.

The outer ends of the teeth of the pinion 36 contact with the cylindrical wall of the

cavity 36× in which said pinion is mounted.

This shaft 37 is driven by any suitable means and causes the pinion 36 and gear 35 to be rotated respectively in the direction of the arrows *a* and *b* on Fig. 3 of the drawings.

The rotation of the gear 35 imparts rotary movement to the shaft 20 and drives the eccentrics 19 secured to said shaft 20.

It is obvious, therefore, that the drive shaft 37 actuates simultaneously both the oil pump and the air pump.

During the rotation of the gear 35 and pinion 36 the oil is drawn through the pipe 29 and carried by the teeth of said gear and pinion in the direction of the arrows *a* and *b* and discharged into a passage 39 leading to the upper end of an oil separating chamber 40 in the upper part of the pump 27.

The overflow pipe 31 communicates with the upper end of this chamber 40.

The undiluted oil collects in the bottom of this chamber 40 while the oil mixed with air or gas developed in the oil pump and piping will remain at the top of said chamber from which it is carried off through the pipe 31 to the tank 30.

The lower end of the chamber 40 communicates with one end of an inclined passage 41, the opposite end of which communicates with one end of a horizontal passage 42 while the opposite end of the horizontal passage 42 communicates with a vertical passage 43 closed at its upper end by a threaded plug 44.

The upper end of the passage 43 opens into a compartment 45 one end of which communicates through a perforated tube 46 within the air inlet 47 leading to the chamber 25 in the air pump.

The admission of oil to the tube 46 from the compartment 45 may be varied by means of the valve 48.

This valve 48 may be of any well known construction but as shown in the drawings is threaded at 49 to a boss 50 projecting from the casing 10.

When the valve 48 has been properly adjusted to admit the required amount of oil to the air pump a plug 51 is inserted into the outer end of the boss 50 so that said valve can not be tampered with.

The tube 46 extends across the air inlet 47 and has perforations in the under side thereof through which oil may pass downwardly through the inlet 47 into the piston chambers 17.

The shaft 37 extends through a projection 52 on the casing 10, this projection having a bushing 53 therein forming a bearing for said shaft 37.

Near the outer end of the projection 52 and secured to the shaft 37 adjacent the cover plate 38 is an oil slinger 54 rotatable with said shaft 37.

This oil slinger 54 causes the oil within the projection 52 to be thrown toward the inner end of the shaft 37 into the chambers 55 and 56 from which it is adapted to drain through the passages 57 closed at their outer ends by plugs 58 and with their inner ends communicating with the bearing 23.

By means of this construction no stuffing box is required for the shaft 37, the slinger 54 preventing any oil from passing outwardly around the shaft 37.

Opposite the inner ends of the drains 57 are grooves 59 formed in the peripheries of the oscillating members 22 so that during the oscillation of these members 22 the oil may at certain times drain from the chambers 55, 56 into the chambers 17.

These grooves 59 are closed at their lower ends as indicated in Fig. 1 and during the rotation of the pistons 18 these closed ends will cut off any communication with the drains 57 and prevent any pressure generated in the air pump from entering these drains 57 and forcing the oil upwardly into the chambers 55, 56.

Any surplus oil in the chambers 17 may drain therefrom through the small openings 60 at the bottom of said chambers into the sump or reservoir 12 when the air pump is not in operation.

From the lower end of this sump or reservoir 12 extends a vent pipe 61 to the suction inlet 47, as indicated in Fig. 1, and the pressure on the discharge side of pump extending through the pipe 71 will force oil from the sump 12 through this pipe 61 into the inlet 47 from which it will pass into the piston crambers 17.

The lower end of this pipe 61 is provided with a small perforations 62 which limits the amount of oil which may enter said pipe 61 at a given time and also the speed thereof.

Each piston chamber 17 communicates with an outlet chamber 63 from which extends a vertical passage 64 leading to the pipe 65 through which the oil mixed with the required amount of air may be delivered to the oil burner.

This passage 64 also communicates with a tube 66 extending across the suction inlet 47 and having perforations in the bottom thereof.

The entrance to this tube 66 may be varied by means of valve 67 which is threaded at 68 to a boss 69 extending from the casing 10.

When the valve 67 has been properly adjusted the outer end of the boss 69 is closed by plug 70 to prevent tampering with the valve 67.

Any surplus air which is not required for the mixture going to the oil burner will pass through the tube 66 and the perforations thereof into the air inlet 47 and subsequently into the piston chambers 17, 17.

This amount of air admitted to the piston chambers 17, 17, in this manner reduces the suction of air through the inlet 47.

From the chamber 63 extends a pipe 71 to the upper end of the sump or reservoir 12, all as shown in Fig. 1 of the drawings.

Any oil from the air pump which cannot be taken care of through the pipe 65 or tube 66 will drain into the sump 12 and create a pressure therein which will force out from the bottom of the sump into the pipe 61.

The opposite ends of the shaft 20 are reduced in diameter as indicated at 72 and confined within bearings 73 formed in the cover plates 28 and 38.

During the rotation of the eccentrics 19 in the direction of the arrow c on Fig. 1 of the drawings, the passage 24 will be uncovered during a portion of the cycle of said eccentric, thereby creating suction which will draw air through the air inlet 47.

As the oil tube 46 extends transversely of the air inlet 47 and has perforations in the lower wall thereof, the suction created in the air inlet 47 will draw the oil through these perforations and become thoroughly mixed therewith before they enter the chamber 25 and subsequently enter the piston chamber 17 through the passage 24.

In like manner, the surplus air which enters the tube 66 extending transversely of the air inlet 47 will be drawn downwardly by suction through the perforations in the tube 66 and will enter the chamber 25 and subsequently the piston chambers 17 through the passages 24.

The greater the quantity of air thus admitted to the chambers 17, the less quantity of fresh air will be required to be drawn through the inlet 47 from the outside of the casing.

As the pistons 18 rotate in their respective chambers 17 with one portion of these pistons always in contact with the cylindrical wall thereof, the oil and air within these chambers will be thoroughly mixed before they enter the outlet chamber 63 and move through the passage 64 to the discharge pipe 65 which leads to the oil burner.

It is essential that there should always be a proper mixture of air and oil when delivered to the oil burner and the proper mixture may be attained by the adjustment of the valve 48.

In the operation of the invention the rotation of the gear 35 and pinion 36 will create a suction in the pipe 29 and cause the oil in the tank 30 to flow into the chamber 34 in the oil pump.

Owing to the outer ends of the teeth of this gear and pinion being at all times in contact with the cylindrical walls of the chambers in which they are mounted, the oil admitted to the chambers 34, 36^{x}, will be carried along the cylindrical walls of these chambers and delivered into the passage 39.

From this passage 39 the oil will be delivered into the top of the separating chamber 40 in which the undiluted oil will pass to the bottom of said chamber leaving the oil mixed with gas or air at the top thereof.

The lower end of this chamber communicates through the passages 41, 42, 43 with the compartment 45 from which the undiluted oil is delivered to the perforated tube 46 extending across the air inlet 47.

When the air pump is in operation the suction created in this inlet will draw the undiluted oil through the perforations in the tube 46 and draw this oil mixed with fresh air into the pison chambers 17.

The surplus oil mixed with any air or gas which may have developed in the pump will return to the tank 30 through the pipe 31 inasmuch as the pipe 31 communicates with the top of the chamber 40.

The air delivered to the outlet chamber 63 and passage 64 which cannot be taken care of by means of the discharge pipe 65 leading to the burner will pass through the perforations in the tube 66 and subsequently enter the piston chambers 17 mixing with the fresh air being admitted at the same time thereto through the air inlet 47.

The amount of surplus air admitted in this manner may be regulated by the adjustment of the valve 68.

There is always air under pressure passing from the outlet 63 through the pipe 71 into the sump 12, thus causing an air pressure on the oil in the sump which forces said oil from said sump into the pipe 61.

This oil passing from the sump through the pipe 61 will be discharged transversely of the air inlet 47 where it will become thoroughly mixed with the air being sucked through the air inlet 47 prior to its admission to the piston chamber 17.

During a portion of the cycle of the pistons 18, any oil entering the chambers 55 and 56 will be drained therefrom through the pasages 57 and enter the piston chambers 17, thus dispensing with the necessity of any stuffing box around the outer end of the shaft 37.

This makes a very effective means for accurately mixing the correct proportions of air and oil to be used in an oil burner.

It is believed that the operation and many advantages of the invention will be understood without further description.

Having thus described my invention, I claim:

1. The combination of a tank adapted to contain oil; a combined oil pump and air pump; a pipe leading from the oil tank to said oil pump; a return pipe from the oil pump to the tank; means for discharging oil from the oil pump into the air pump; an outlet from the air pump; a by-pass from said outlet to the air pump inlet consisting in part of a tube extending across said inlet having perforations in the under wall there-

of; and means for regulating the admission of air into said tube.

2. The combination of a tank adapted to contain oil; a casing; a combined oil pump and air pump; a pipe leading from the oil tank to said oil pump within said casing; an oil separating chamber formed in said casing above in said oil pump; means for delivering oil to the top of said chamber; means for delivering undiluated oil from the bottom of said chamber to the air pump inlet; and a pipe leading from the top of said chamber to said tank.

3. The combination of a tank adapted to contain oil; a combined oil pump and air pump; a pipe leading from the oil tank to said oil pump; an oil separating chamber in said oil pump; means for delivering oil to the top of said chamber; means for delivering undiluted oil from the bottom of said chamber to the air pump inlet consisting in part of a tube extending across said air pump inlet and having perforations in the bottom thereof; and a pipe leading from the top of said chamber to said tank.

4. The combination of a tank adapted to contain oil; a combined oil pump and air pump; a pipe leading from the oil tank to said oil pump; an oil separating chamber in said oil pump; means for delivering oil to the top of said chamber; means for delivering oil from the bottom of said chamber to the air pump inlet consisting in part of a tube extending across said air pump inlet and having perforations in the bottom thereof; a valve for regulating the admission of oil to said tube, said valve being confined within a tubular boss on the air pump casing; a closure for the outer end of said boss; and a pipe leading from the top of said chamber to said tank.

5. The combination of a tank adapted to contain oil; a combined oil pump and air pump; a pipe leading from the oil tank to said oil pump; a return pipe from the oil pump to the tank; means for discharging oil from the oil pump into the air pump; an outlet from the air pump; a sump below said air pump; a pipe leading to the top of the sump from the air pump outlet; and a vent pipe from the bottom of said sump to the air pump inlet.

6. The combination of a tank adapted to contain oil; a combined oil pump and air pump; a pipe leading from the oil tank to said oil pump; a return pipe from the oil pump to the tank; means for discharging oil from the oil pump into the air pump; an outlet from the air pump; a sump below said air pump; a pipe leading to the top of the sump from the air pump outlet; a vent pipe from the bottom of said sump to the air pump inlet; and a small orifice between said sump and the piston chamber of said air pump.

7. The combination of a tank adapted to contain oil; a casing; an oil pump within said casing; an air pump also within said casing and having a cylindrical piston chamber; a piston in said chamber contacting at one point with the cylindrical wall of said chamber; a pipe leading from the oil tank to said oil pump; a return pipe from the oil pump to the tank; means within said casing whereby the oil from the oil pump may be discharged into the inlet of said air pump; a discharge pipe from the air pump; a gear in said oil pump; a pinion meshing therewith; a driving shaft on which said pinion is mounted, said shaft being surrounded by an annular space; an oil slinger on said shaft adapted to throw oil into said space and prevent its escape through said casing; means permitting the oil in said annular space to drain into said piston chamber during a portion of the cycle of said piston; and a shaft to which said piston and gear are both secured.

8. The combination of a casing; an oil pump within said casing; an air pump also within said casing; an oil separating chamber in the casing of said oil pump; means for delivering oil to the top of said chamber; means for delivering undiluted oil from the bottom of said chamber to the air pump inlet; and means for discharging the oil mixed with gas from the top of said separating chamber.

9. The combination of an oil pump; an air pump; an oil separating chamber in said oil pump to the top of which oil is delivered by the pump mechanism; means for delivering undiluted oil from the bottom of said chamber to the air pump inlet; a pipe leading from the top of said chamber for the discharge of a mixture of air and oil; a discharge pipe from the outlet of said air pump; and means for discharging into the air inlet of the air pump all surplus mixture of gas and oil in said air pump outlet.

10. The combination of an oil pump; an air pump; a sump below said air pump; an air inlet to said air pump; a pipe from the pressure side of said air pump to the top of said sump; an oil separating chamber in said oil pump; means for delivering oil to the top of said chamber; means for delivering undiluted oil from the bottom of said chamber to the air pump inlet; means for delivering into the air pump inlet all surplus oil mixed with gas discharged from the air pump; and means for delivering oil from said sump to said air pump inlet.

11. The combination of an oil pump, an air pump having an air inlet; means for delivering oil from said oil pump to said air inlet; a sump below said air pump; means for delivering oil under pressure from said sump to said air inlet; an outlet from said

air pump; and means for discharging all surplus mixture of oil and gas from said outlet into said air inlet.

Signed by me at 294 Washington St., Boston, Massachusetts, this 25th day of September, 1928.

JUSTUS R. KINNEY.