Aug. 4, 1970 W. J. EMERSON ET AL 3,523,026

NURSER PACKAGE

Filed Oct. 11, 1967

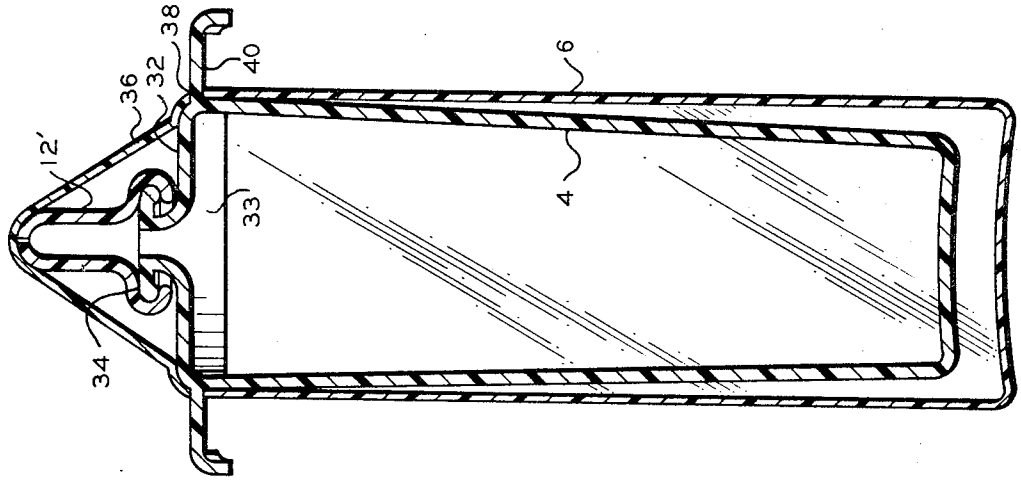

FIG. 3

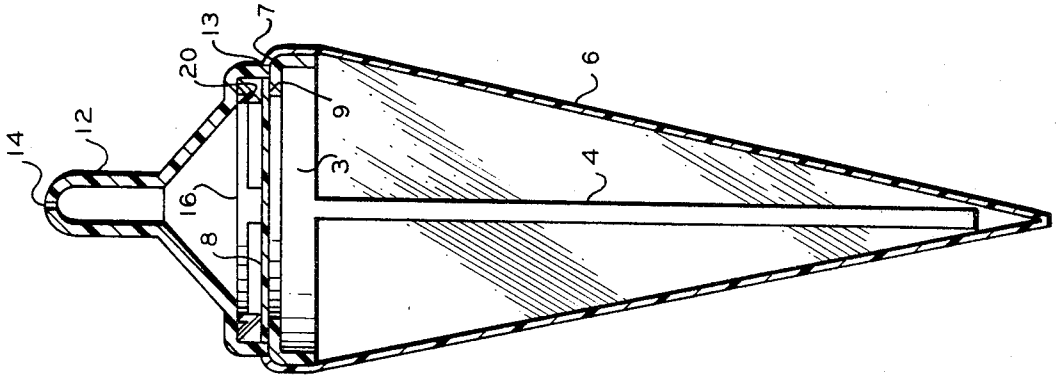

FIG. 2

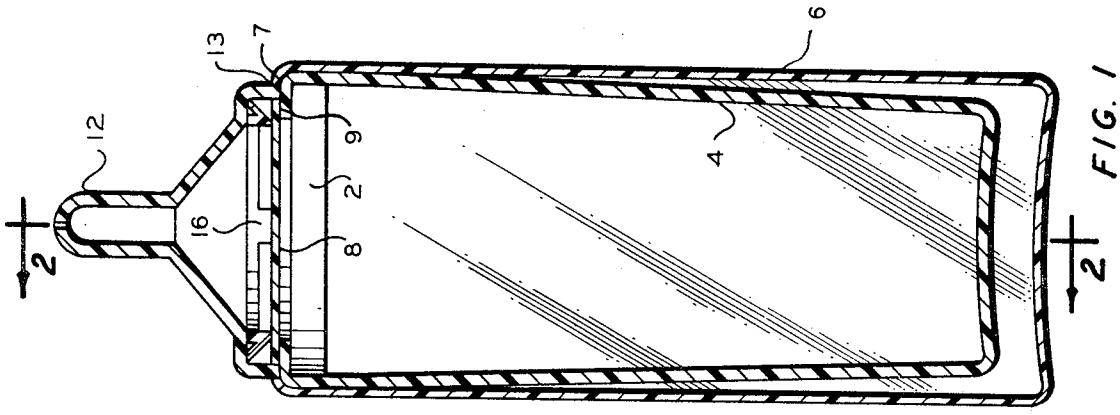

FIG. 1

INVENTORS
W.J. EMERSON
W.C. LINAM

BY Young + Quigg

ATTORNEYS

United States Patent Office

3,523,026

Patented Aug. 4, 1970

1

3,523,026

NURSER PACKAGE

William J. Emerson, Bartlesville, Okla., and William C. Linam, Chicago, Ill., assignors to Phillips Petroleum Company, a corporation of Delaware

Filed Oct. 11, 1967, Ser. No. 674,618
Int. Cl. A61j 9/00
U.S. Cl. 99—171 6 Claims

ABSTRACT OF THE DISCLOSURE

An infant nurser has an annular ring with a supporting structure, for instance, a depending loop integrally attached thereto; an open mouth plastic bag is sealed at the opening thereof to said annular ring; the bag is filled with a consumable liquid and a nipple is affixed over the annular ring, a plastic film, for example, across the nipple or over the opening at the annular ring seals the liquid in the nurser. In one embodiment, means are also provided for breaking the thermoplastic film across the annular ring when access to the contents of the bag is desired.

BACKGROUND OF THE INVENTION

This invention relates to disposable nursers for infants.

Many nursers containing prepackaged milk have been devised. A popular dispensing nurser employs a bottle whose neck opening is the size of a standard cap and nipple. To use this nurser the nipple is attached to the bottle. This nurser requires the user to sterilize the nipples before they can be used and in the case of glass bottles it is rather expensive.

Other nursers have been proposed for home use. For example, Boynton et al. 3,204,855 discloses a disposable nurser in which a flexible, collapsible bag is made from thin gauge plastic and placed in a bottle-supporting structure to which it is held in place by means of a cap. This nurser is intended for filling at home as contrasted with a prepackage container.

Prepackaged nursers have gained increasing popularity. These prepackaged nursers must provide a hermetically sealed package with a sterile enclosed nipple. Some of the more popular nursers supply flexible bags which collapse as the product is consumed. Some of these nursers provide a nipple which is unattached to the bottle opening itself but is supplied to the opening after the package has been opened. Others have a nipple over the bottle opening and an easily breakable sealed film between the contents of the package and the nipple over the normal opening of the nursing bottle. The sealed film prevents the contents of the package from leaking through the nipple.

Fischer 3,193,125 discloses a container in which a preformed thermoplastic nipple is attached to the top of a flat thermoplastic container. A hole is made in the nipple for use. The nipple and container can be made in one piece with the shape of the container relatively flat.

SUMMARY OF THE INVENTION

It is an object of this invention to provide a disposable nursing package which is self-supporting and light weight.

It is a further object of this invention to provide a nursing container for prepackaged liquids in which the container contents are easily dispensed.

It is a still further object of this invention to provide a nursing container for prepackaged liquids in which a container means is provided for holding the container during dispensing thereof.

It is yet a further object of this invention to provide a nursing container which is easily fabricated.

According to the invention, a disposable infant nurser is provided comprising an annular ring with a depending

2

supporting structure affixed thereto. An open mouth plastic bag fits over said supporting structure and is sealed at the opening thereof to said annular ring. The bag is filled with a consumable liquid and a nipple is placed over the opening in the annular ring. A sealing film can be applied either under the nipple or over the nipple to prevent the contents of the liquid from leakin out of the package prior to consumption.

BRIEF DESCRIPTION OF THE DRAWINGS

In the drawing forming a part hereof in which like reference characters depict like parts in all views, FIG. 1 is a sectional view through one embodiment of the invention; FIG. 2 is a view along lines 2—2 of FIG. 1; and FIG. 3 is a sectional view of a second embodiment of the invention.

DESCRIPTION OF THE PREFERRED EMBODIMENTS

The annular ring with the depending supporting structure can be molded from any suitable thermoplastic material such as solid polymers of at least one mono-1-olefin, said 1-olefin having from 2–8 carbon atoms per molecule (that is, polymers and copolymers of these 1-olefins), polyvinylchloride, polystyrene, and the like. The preferred ring materials are polymers of at least one 1-olefin selected from the group consisting of ethylene, propylene, and butene. A preferable method of forming the annular ring and depending supporting structure is by injection molding. The open mouth bag is preferably formed of a thin gauge thermoplastic material which is relatively sturdy. The thermoplastic film can be a polymer of at least one 1-olefin selected from the group consisting of ethylene, propylene, and butene, polyvinylchloride, polyvinylidene chloride or copolymers thereof. A preferred material is a polyethylene (or ethylene/butene copolymer) bag having a coating on the outer surface thereof of a vinylidene chloride polymer (by vinylidene chloride polymr is meant polyvinylidene chloride and copolymers of vinylidene chlorid with vinyl chloride). The term "annular ring" as used throughout the specification and the claims is, of course, intended to include oval, rectangular and other similar geometric shapes.

The sealing film can be made of the same materials as the bag or from different materials. Preferably, the sealing film will be thinner and more easily breakable. A preferred film is polyvinylidene chloride coated polyolefin film.

The film piercing means such as that shown in FIGS. 1 and 2 is preferably made by injection molding a thermoplastic resin such as polyethylene, polypropylene, polybutene-1, polystyrene, polyvinylchloride and copolymers thereof. This piercing means can be omitted and the sealing film ruptured by depressing a portion of the nipple with a finger.

The nipple used in the invention can be made of rubber or thermoplastic material. Preferably, the nipple is made from a thermoplastic material and is injection molded or is vacuum formed. The thermoplastic materials are preferred since they are less expensive than rubber. It may be heat sealed to the annular ring or where film is sealed across the ring it may be snapped on.

As can be seen from the foregoing, a simple, effective and inexpensive dispensing package for infants is provided. The package is, in all respects, an easy one to manipulate during the dispensing of the contents therefrom whether the dispenser is held by the parent or by the infant.

The container can be filled through the top prior to affixing the nipple or the bottom can be left open and the container filled through the bottom after the sealing film and nipple are in place, the bottom thereafter being sealed.

Referring now to FIGS. 1 and 2 in particular, a molded thermoplastic annular ring **2** with depending annular flange **3** has integrally molded thereto depending U-shaped loop or rib **4** which serves as a supporting structure. An open mouth thermoplastic bag **6** is heat sealed at the open mouth thereof to the annular ring **2** along line **7**. The bag is filled with a consumable liquid, such as milk; and, according to one embodiment of the invention, a thin sealing film **8** is heat sealed over the open portion of the bag to annular ring **2** along line **9**. A nipple **12** is sealed to the top portion of the annular ring **2** along line **13** and nipple **12** is provided with at least one opening **14** for removing liquid from the package. Beneath nipple **12** and above film **8** there is provided a means **16** with depending prongs **20** for breaking film **8**.

As can be seen from FIGS. 1 and 2, the depending ribs **4** provide support for bag **6** and also provide a means by which the package can be gripped during the consumption of the liquid within the container. Further, the depending ribs **4** prevent free rolling of the package when placed on its side. The internal stiffening ribs **4** provide a means to hold the package as the bag **6** is being deflated by consumption. The positioning of the ribs **4** inside the bag maintains the bag **6** in the proper position during dispensing. If the rib were on the outside of the bag, it would not support the bag without a more substantial structure or without sealing the lower portion of bag **6** to the lower portion of rib **4**. Also this construction makes possible high speed fabrication of the container with a minimum of steps which is absolutely essential to a commercially acceptable disposable package. Because there is no external supporting structure in the way, the heat sealing of the film to the ring is facilitated; this is because the bag can be sealed to the ring from the outside instead of from the inside which is more difficult. It is also within the scope of the invention to form the nipple, annular ring and supporting loop as one integral piece. In such embodiments the sealing film as shown in FIGS. 1 and 2 would be sealed to the underside of the ring.

Referring now to FIG. 3, a similar nursing package has been provided with an annular ring **32** which has a depending annular flange **33** at the lower portion thereof; in addition a rim **34** at the upper portion thereof is provided. In this embodiment the nipple **12'** is clamped over rim **34** and the sealing film **36** is heat sealed over nipple **12'** at **38**. Also a handle structure **40** comprising at least one protuberance extending outwardly from ring **32** is provided to serve as another means for the infant to hold the nurser.

Example

A tubular bag, heat sealed at the bottom and open at the top was formed of a laminate of 0.92 density (ASTM D 1505–63T) polyethylene and Saran (trademark for vinylidine chloride polymers). Each layer was 1 mil thick for a total laminate thickness of two mils. An annular ring with an integral depending U-shaped loop was fabricated from 0.950 density (ASTM D 1505–63T) 0.3 melt index (ASTM D 1238–62T, Condition E) ethylene-butene copolymer. The bag was drawn up around the depending loop and sealed to the annular ring. The polyethylene layer was on the inside so as to effect a good seal with the polyethylene ring. The bag was filled from the top with liquid and a film of the above-described laminate sealed across the opening of said annular ring, again with the polyethylene layer in contact with the ring. A rubber nipple was then affixed to the ring.

While this invention has been described in detail for the purpose of illustration it is not to be construed as limited thereby but is intended to cover all changes and modifications within the spirit and scope thereof.

We claim:

1. A dispensing package comprising:

an annular ring with a supporting structure affixed thereto;

an open mouth deflatable bag around said supporting structure and sealed at the opening thereof to said annular ring, said supporting structure comprising a depending U-shaped loop within said open mouth bag, which loop extends from two portions of said ring and is substantially perpendicular to said annular ring, extending down into said open mouth bag a distance sufficient to provide a gripping structure;

consumable liquid in said open mouth bag;

a nipple attached to the top portion of said ring over the opening in said open mouth bag; and

a film sealed to said annular ring to thus seal said open mouth of said bag to prevent liquid from leaking out of said package before it is desirable to consume the contents of said package.

2. A dispensing package according to claim **1** wherein sealing film is a relatively thin thermoplastic film which is sealed across the opening of said annular ring beneath said nipple, and there is provided a means for rupturing said film when it is desirable to consume said liquid.

3. A dispensing package according to claim **1** wherein said sealing film is a relatively thin thermoplastic film which is sealed to said annular ring over the nipple.

4. A dispensing package according to claim **3** wherein said annular ring has a lip at the upper portion thereof and said nipple engages said lip.

5. A dispensing package according to claim **1** comprising in addition a handle structure having at least one protuberance extending outwardly from said annular ring, said protuberance being of sufficient size and shape that it can be gripped by an infant when consuming the contents of the package.

6. A container according to claim **1** wherein said ring is fabricated of a solid polymer of at least one mono-1-olefin selected from the group consisting of ethylene, propylene, butene and mixtures thereof and said bag is made of a laminate of vinylidene chloride polymer and a polymer of at least one 1-olefin selected from the group consisting of ethylene, propylene, butene, and mixtures thereof, said layers being so disposed that said polymer of at least one 1-olefin is in contact with said ring.

References Cited

UNITED STATES PATENTS

2,885,104	5/1959	Greenspan	215—11 X
3,193,125	7/1965	Fischer	215—11

FRANK W. LUTTER, Primary Examiner

U.S. Cl. X.R.

215—11