Dec. 20, 1955 H. G. MUSGRAVE 2,727,597

WINDOW PANE RETAINER

Filed Oct. 2, 1952

FIG. 1.

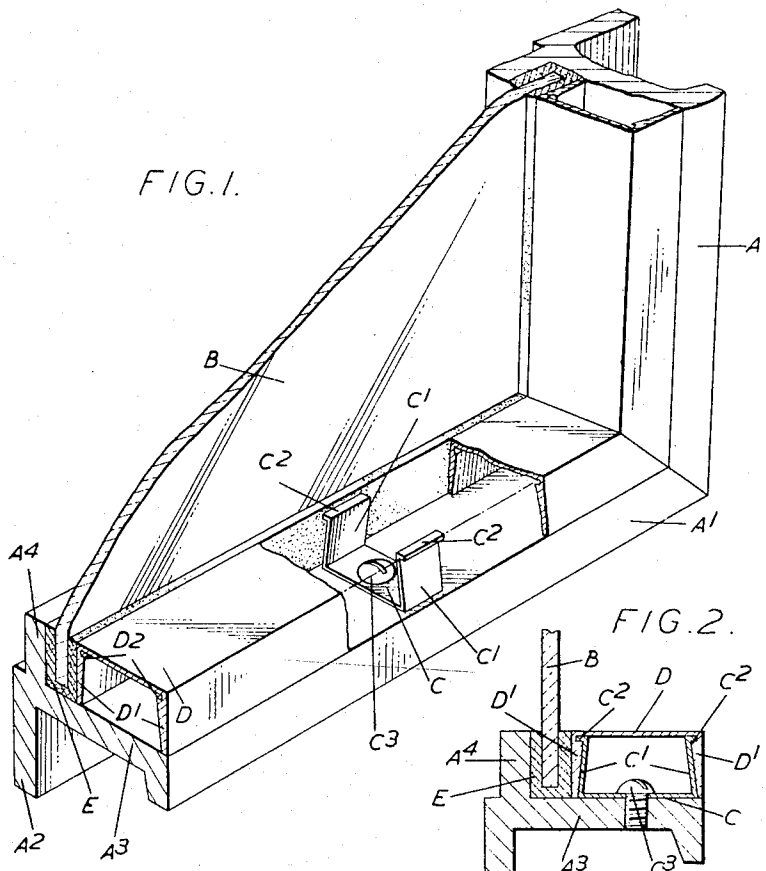

FIG. 2.

FIG. 3.

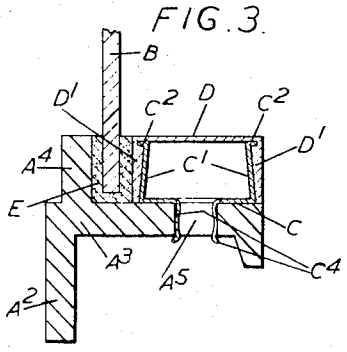

Inventor
HAROLD G. MUSGRAVE.

By Emery Holcombe Y Blair
Attorney

United States Patent Office 2,727,597 Patented Dec. 20, 1955

2,727,597

WINDOW PANE RETAINER

Harold Graham Musgrave, Upton-by-Chester, England, assignor to Williams & Williams Limited, Chester, England, a British company

Application October 2, 1952, Serial No. 312,710

Claims priority, application Great Britain June 11, 1952

3 Claims. (Cl. 189—78)

This invention relates to window frame assemblies, which will be assumed for the sake of convenience to be of metal although they may be formed of other material, of the kind in which the inner face of each of the glass-supporting frame members constituting the frame in which the glass is carried is formed with a projecting longitudinal rib lying adjacent to one edge thereof, while a so called glazing bead is detachably secured to such inner face of the frame member with one side of the bead spaced from but lying approximately parallel to the appropriate face of the rib while its other side extends towards and usually into close proximity to the side of the frame member remote from the rib, the edge of the glass lying in the channel-like space between the rib and the adjacent side of the bead, which space is otherwise substantially filled with putty or other suitable plastic sealing compound in which the edge of the glass is thus embedded.

Various constructions of window frame assembly of the above kind have been proposed including that proposed in the present applicant's British patent specification No. 667,427, and it is an object of the present invention to provide a form of window frame assembly of the general kind referred to which will have certain advantages over previous proposals.

In a window frame assembly of the kind referred to according to the present invention there is combined with each glass-supporting frame member having a projecting longitudinal rib formed thereon, one or more channel section clips each having the base of its channel secured to the inner face of the frame member with the sides of the channel extending away from the frame member and lying generally parallel to but spaced from the rib, the sides of the channel section clip or clips being formed at their free edges with outwardly projecting ribs, and a channel section glazing bead formed with grooves extending along the inner faces of its sides and constructed to fit over the clip or clips with the ribs on the edges of the sides of the clip or clips lying and resiliently retained in the grooves in the sides of the glazing bead.

In one arrangement the clip or each of the clips is secured to the glass-supporting frame member by one or more screws or bolts passing through the base of the clip and either engaging a screwthread in the glass-supporting frame member or passing therethrough and provided with a nut. Alternatively the clip or each clip may be secured to the glass-supporting frame member by one or more pairs of spring fingers formed integral with or secured to and projecting from the base of the clip into and preferably through an aperture in the glass-supporting frame member, the spring fingers making resilient engagement with opposite sides of the aperture and preferably having projections at their ends which engage the outer face of the frame member and thus prevent withdrawal of the fingers. In such a construction the spring fingers are conveniently formed by slotting and pressing out appropriate parts of the base of the clip member to form the fingers.

In any case the sides of each clip member may be of approximately the same depth, while the sides of the glazing bead are also of the same depth in which case the ribs on the edges of the sides of each clip member conveniently engage grooves which lie close to the base of the glazing bead. Alternatively, however, the sides of each clip member may be of different depths, in which case the glazing bead may comprise a base portion from which the two sides project parallel to one another but in planes inclined to the plane of the base portion so that the base of the bead is inclined to the base of each clip and slopes towards the middle area of the glass from the edge of the glass-supporting member remote from the rib. In such an arrangement the side of the glazing bead which lies adjacent to the rib on the glass-supporting frame member preferably extends into close proximity to the base of each clip.

The invention may be carried into practice in various ways but two constructions according to the invention are illustrated by way of example in the accompanying drawings, in which:

Figure 1 is a perspective view, partly cut away, of a portion of a window frame assembly according to the invention,

Figure 2 is a cross-section through the window frame assembly shown in Figure 1 taken in a plane normal to the length of one of the sides of the frame, and

Figure 3 is a similar view of Figure 2 showing a modification of the construction shown in Figures 1 and 2.

In the construction shown in Figures 1 and 2 the assembly comprises a glass-supporting metal window frame which would comprise the usual four sides or frame members but only two of which A, A^1, are for convenience shown in Figure 1. Each of these frame members A, A^1 is of generally L-section as shown with one arm A^2 of the L facing outwards and the other arm A^3 of the L lying in a plane normal to that of the glass, indicated at B, which is to be supported in the frame.

Projecting from the inner arm of each L-section frame member at a point adjacent to the junction of the two arms A^2, A^3 of the L is a longitudinal rib A^4.

Mounted on the inner face of the same arm A^3 of the L at points displaced from the rib A^4 is a series of channel section clip members, one of which only is shown in Figure 1, each clip member having its base C lying in contact with the inner face of the frame member while the sides of the channel C^1 lie approximately parallel to the rib A^4. Each of these channel section clip members C, C^1 is secured to its associated frame member by a single screw indicated at C^3 passing through the base C of the clip member and engaging a screwthreaded hole in the frame member. The edge of each side C^1 of each channel section clip member is formed with a shallow outwardly extending rib C^2 and the clip members have a limited degree of resilience.

Placed over the clip members C, C^1, C^2 is a channel section glazing bead the base D of which faces inwards, while its two sides D^1 extend outside the sides C^1 of the clip members. Formed in the inner face of each side D^1 of the channel section glazing bead at the point where the side joins the base D of the bead is a groove D^2 and in these grooves fit and are retained by the resilience of the clip members the ribs C^2 on the corresponding edges of the sides C^1 of the clip members.

Moreover in order to facilitate the application of the channel section glazing bead D, D^1 to the clip members, the sides D^1 of the channel section glazing bead may be formed so that the space between them tapers inwardly from its widest part adjacent to the edges of the sides D^1 to its narrowest point adjacent to the grooves D^2, as clearly shown in Figure 1.

In the construction shown this is achieved by making the sides D^1 of tapering thickness but in a modification

it may be achieved by making the sides of uniform thickness and sloping them slightly outwards from the base D.

In any case it will be seen that the arrangement enables the edges of the sides D^1 of the channel section bead D first to be placed freely over the ribs C^2 at the edges of the sides of the clip members C, C^1, and the bead D then to be forced downwards, whereupon the sides C^1 of the clip members are forced resiliently inwards by the inclined inner faces of the sides D^1 of the bead until the ribs C^2 spring into the grooves D^2.

In the modification shown in Figure 3 the construction is the same as that shown in Figures 1 and 2 except that each clip member C, C^1, instead of being secured to the part A^3 of the frame member by screws C^3, is secured to this part by a pair of spring fingers C^4 formed integral with the base C of the clip and passing through and making resilient engagement with the sides of a hole A^5 in the part A^3.

It will be understood that a suitable plastic substance such as putty will be provided in the groove between the bead D and the rib A^4 as indicated at E around the edge of the glass B.

What I claim as my invention and desire to secure by Letters Patent is:

1. A window frame assembly including a glass-supporting frame member having an inwardly projecting longitudinal rib lying adjacent to one edge thereof, at least one channel section clip with the base of its channel secured to the inner face of the frame member and the sides of the channel of equal and substantial width and extending away from the frame member and lying generally parallel to one another and to the said rib, outwardly projecting ribs formed at the free edge of the said sides of the said channel section clip, and a channel section glazing bead comprising a base with sides of approximately the same substantial width as one another extending approximately parallel to one another from the said base and having grooves extending along the inner faces of the sides close to the said base of the said glazing bead, the glazing bead being constructed to fit over the clip with the ribs on the edges of the sides of the said clip lying in the grooves in the sides of the said glazing bead and retained therein by the resilience of the clip.

2. A window frame assembly as claimed in claim 1 including at least one screw passing through the base of each clip and engaging a complementary hole in the glass-supporting frame member and serving as a means for securing the clip to the frame.

3. A window frame assembly as claimed in claim 1 in which each frame member has apertures therein and each clip includes at least one pair of spring fingers projecting from the base of the clip and engaging an aperture in the glass-supporting frame member with opposite sides of which aperture the spring fingers make resilient engagement to secure the clip to the frame member.

References Cited in the file of this patent

UNITED STATES PATENTS

1,939,892	Goddard et al.	Dec. 19, 1933
1,955,181	Goddard	Apr. 17, 1934
2,095,892	Place	Oct. 12, 1937
2,119,685	Peremi et al.	June 7, 1938
2,208,618	Andersson	July 23, 1940

FOREIGN PATENTS

440,256	Italy	Oct. 9, 1948