(12) INTERNATIONAL APPLICATION PUBLISHED UNDER THE PATENT COOPERATION TREATY (PCT)

(19) World Intellectual Property Organization
International Bureau

(43) International Publication Date
22 August 2019 (22.08.2019)

WIPO | PCT

(10) International Publication Number
WO 2019/158136 A1

(51) International Patent Classification:
*E06B 7/02* (2006.01) *E06B 9/32* (2006.01)
*E06B 9/30* (2006.01)

(21) International Application Number:
PCT/CZ2019/050004

(22) International Filing Date:
16 February 2019 (16.02.2019)

(25) Filing Language: English

(26) Publication Language: English

(30) Priority Data:
PV 2018-82 19 February 2018 (19.02.2018) CZ

(71) Applicant: **CESKE VYSOKE UCENI TECHNICKE V PRAZE** [CZ/CZ]; Jugoslavskych partyzanu 1580/3, 160 00 Praha 6 (CZ).

(72) Inventor: **TYWONIAK, Jan**; Plzakova 213, 25722 Cercany (CZ).

(74) Agent: **DOKULILOVA, Silvie**; Basneho 279/51, 62300 Brno (CZ).

(81) Designated States *(unless otherwise indicated, for every kind of national protection available)*: AE, AG, AL, AM, AO, AT, AU, AZ, BA, BB, BG, BH, BN, BR, BW, BY, BZ, CA, CH, CL, CN, CO, CR, CU, CZ, DE, DJ, DK, DM, DO, DZ, EC, EE, EG, ES, FI, GB, GD, GE, GH, GM, GT, HN, HR, HU, ID, IL, IN, IR, IS, JO, JP, KE, KG, KH, KN, KP, KR, KW, KZ, LA, LC, LK, LR, LS, LU, LY, MA, MD, ME, MG, MK, MN, MW, MX, MY, MZ, NA, NG, NI, NO, NZ, OM, PA, PE, PG, PH, PL, PT, QA, RO, RS, RU, RW, SA, SC, SD, SE, SG, SK, SL, SM, ST, SV, SY, TH, TJ, TM, TN, TR, TT, TZ, UA, UG, US, UZ, VC, VN, ZA, ZM, ZW.

(54) Title: EXTERIOR SHADING SYSTEM WITH INTEGRATED FUNCTIONS FOR ROOF WINDOWS

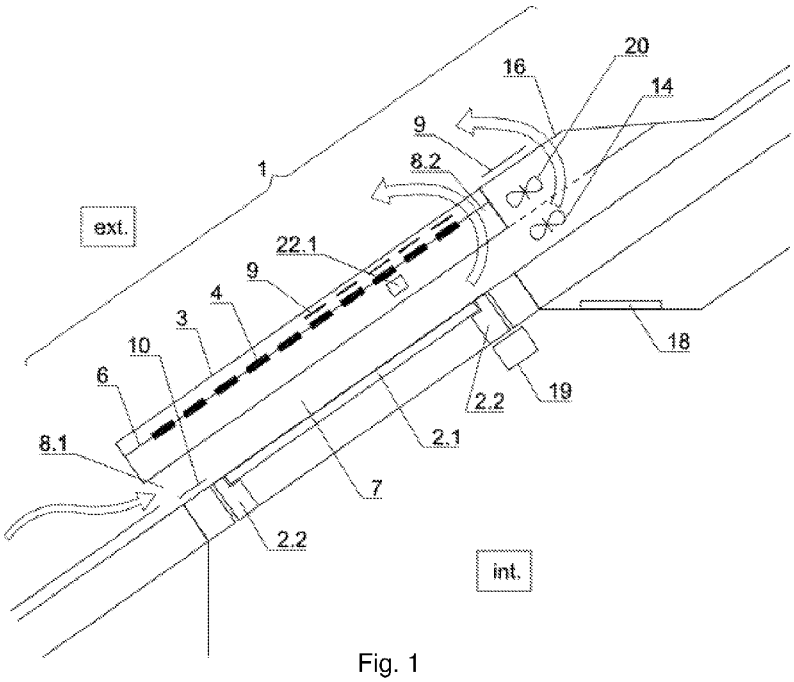


Fig. 1

(57) Abstract: The exterior shading system (1) comprises an exterior shading system (1) frame (3) located on the exterior side of a roof window (2) and a set (5) of shading lamellae (4), wherein the frame (3) of the exterior outer shading system (1) carries guiding elements (6) for determining the position of the lamellae (4) and their movement, these guiding elements (6) being arranged so that at all positions of the set (5) of lamellae (4), wherein the set (5) of lamellae (4) at least partially shades the roof window (2), an air gap (7) is provided between the set (5) of lamellae (4) and a glazing unit (2.1) of the roof window (2), having at least two vents (8.1, 8.2) to ventilate this air gap (7). It includes at least one Peltier cell (10), at least one photovoltaic cell (9) and at least one sensor (22.1, 22.2) of climatic variables, these elements being connected to a central unit (11) including a power supply unit (12) with an accumulator and an electronic control unit (13) for storing and/or controlled use of generated electric energy.

WO 2019/158136 A1

*[Continued on next page]*

(84) **Designated States** *(unless otherwise indicated, for every kind of regional protection available)*: ARIPO (BW, GH, GM, KE, LR, LS, MW, MZ, NA, RW, SD, SL, ST, SZ, TZ, UG, ZM, ZW), Eurasian (AM, AZ, BY, KG, KZ, RU, TJ, TM), European (AL, AT, BE, BG, CH, CY, CZ, DE, DK, EE, ES, FI, FR, GB, GR, HR, HU, IE, IS, IT, LT, LU, LV, MC, MK, MT, NL, NO, PL, PT, RO, RS, SE, SI, SK, SM, TR), OAPI (BF, BJ, CF, CG, CI, CM, GA, GN, GQ, GW, KM, ML, MR, NE, SN, TD, TG).

**Declarations under Rule 4.17:**

— *as to applicant's entitlement to apply for and be granted a patent (Rule 4.17(ii))*
— *of inventorship (Rule 4.17(iv))*

**Published:**

— *with international search report (Art. 21(3))*
— *with amended claims (Art. 19(1))*
— *in black and white; the international application as filed contained color or greyscale and is available for download from PATENTSCOPE*

# Exterior shading system with integrated functions for roof windows

## Technical Field

The invention relates to a controlled movement of air under roof window shading elements to reduce thermal load in an interior of a building, in particular by an advantageous use of solar energy.

## Background Art

When exposed to sunlight outside the heating season, roof windows facing the sunlit side typically introduce such amount of heat into the interior of the building that, in addition to optical discomfort due to direct sunlight penetration, the air temperature in the interior of the building may be increased to such an extent, that hygienic conditions are exceeded, unless intensive ventilation and/or cooling is provided. Under-the-roof rooms are usually made up of structures with lower thermal inertia than other parts of the building, so they are more prone to such overheating.

Windows in the perimeter walls are, for analogous reasons, usually equipped with external shading devices, the most effective of which are adjustable horizontal louvers. In the case of roof windows, the use of external shading devices is uncommon. However, available solutions of such shading devices preventing access of sun rays onto the glazing area result in a virtually closed air space created under the shading louvers or a roller blind system, which is further heated by heat conducted by the louvers or blinds exposed to solar energy. As a result, there is an increased air temperature in the cavity or gap in front of the exterior side of the glazing, which leads to the transmission of heat through the glazing into the interior, albeit to a lesser extent than without the use of a shading system.

Roof windows used in residential buildings may be partially or completely shaded for a considerable part of the time when exposed to sun rays, because the rooms (typically bedrooms) are not used during the day or a part of it.

Shading elements located within the glazing unit or on the interior side of the glazing affect only the visual comfort in the room and have almost no effect on reducing the penetration of undesired solar thermal gains into the room. Undesired heat gains in the

room often result in the need for air-conditioning, which increases energy demand, operating costs and environmental load.

Limiting of passive solar gains of the window is to a certain extent possible by a selection of proper glazing. Such a measure usually leads to a reduction of no more than 70% of the gain, otherwise the daylight illumination of the room would be excessively impaired. Concurrently a situation would arise where it would not be possible to use passive solar gains at a time when it is beneficial for the energy balance of the room.

The use of shading lamellae of horizontal exterior louvers and horizontal awnings in front of windows for the placement of photovoltaic cells is known. In terms of electricity production, however, this is not an effective source compared to photovoltaic systems on larger, more compact surfaces. The description of such solutions is the subject of the application CN106639183 *Dynamic sun-shading device integrated with PV (Photovoltaic) panels*, further of the utility model *CN204960172 (U) - Building integrated photovoltaic's outer solar shading system of tripe,* and of the utility model CN204877211 (U) *Intelligence sun-shading louver system*. None of these documents deals with the controlled ventilation of the air cavity or gap between the external shading systems and exterior surfaces of roof windows.

Summary of Invention

The above-mentioned drawbacks are eliminated by the solution of the present invention which proposes installing an exterior shading system on the roof window exterior side, which significantly increases air flow movement in the air gap between the shading louvre assembly and the exterior side of the roof window glazing unit by means of electrical elements, thus decreasing the expected temperature on the glazing unit surface. The movement of air in the continuous air gap is ensured by a suitable geometric arrangement and can be significantly enhanced in a controlled manner by means of electric fans. To power them, it is particularly advantageous to use the solar energy incident on the shading system elements, and because part of the incident solar energy is converted to electric energy by means of the photovoltaic cells placed thereon, and thus further reduces the thermal load into the air cavity by approximately 10%, and additionally, there is a high degree of time correlation between the photovoltaic electricity generation and its use for the operation of electric fans. An

additional element supporting the air movement and air temperature reduction are Peltier cells powered by electric energy from the photovoltaic cells. The proposed solution can thus operate with a considerable degree of autonomy and/or be advantageously multi-level controlled by an electronic control system responding to information from installed sensors, to user requirements and to evaluation by an superordinate intelligent control system.

The exterior roof window shading system of the present invention comprises an exterior shading system frame which is located in the exterior on the exterior side of the roof window. The dimensions and position of the frame are such that when viewed from the outside in a direction perpendicular to the plane of the roof window glazing unit, the outer contour of the frame, where the frame is present, overlaps beyond the outer contour of the roof window casement. The system further includes a set of shading lamellae. The frame of the exterior shading system carries guiding elements for defining the position of the lamellae and for their movement, these guiding elements being positioned in such manner, that at all positions of the set of lamellae, in which the set of the lamellae at least partly shades the roof window, there is an air gap between the set of the lamellae and the roof window glazing unit. The air gap has at least two vents communicating with the exterior for venting. The system additionally comprises at least one Peltier cell, at least one photovoltaic cell and at least one sensor of climatic variables, wherein the photovoltaic cells, Peltier cells and sensors of climatic variables are interconnected with a central unit including a power unit with an accumulator and an electronic control unit for storing and/or controlled use of the generated electricity.

The Peltier cells are advantageously mounted on the frame of the exterior shading system and/or on the shading lamellae and/or on the lower part of the non-movable window frame and/or on the external side of the glazing unit at the lower edge of the roof window.

It is advantageous, if an additional space filled with air is created in the area adjacent to the air gap, which communicates with this air gap. Then in this additional space, at least one fan is located which is connected to the central unit for its control and power supply.

It is advantageous if at least one first sensor of climatic variables is located in the air gap, this sensor being a temperature sensor, and/or if at least one second sensor of

climatic variables is located in the exterior, this sensor being a sensor for combined measurement of several climatic variables.

With an advantage, the system comprises a first drive unit for driving the set of shading lamellae which is connected to the central unit for its control and drive supply

It is advantageous, if the lower part of the air gap is equipped with a bottom vent which is permanently open, and in the upper part with a vent which is closeable and is located in the upper part of the set of shading lamellae .

In an advantageous embodiment, the system additionally includes a box for housing the set of shading lamellae in a retracted or partially retracted state, attached to the upper part of the exterior shading system frame. Between the box interior and the air gap there is an air connection. The box additionally contains a central unit including a power unit with an accumulator, an electronic control unit and a first drive unit for driving the shading lamellae assembly. In the walls of the box, there is at least one additional vent communicating with the exterior for improved air gap ventilation.

It is advantageous, if the shading lamellae are positionable.

In advantageous embodiments, the photovoltaic cells are located on the shading lamellae and/or on the non-moving parts of the exterior shading system.

It is also possible to connect an illuminating fixture to the central unit, to illuminate the room in the interior behind the roof window.

This illuminating fixture is advantageously mounted into the roof window lintel or lining or on their surfaces.

It is advantageous, if the central unit is interconnected with the superordinate control unit for operation and security of the house.

In one possible embodiment, the exterior shading system is also equipped with a second drive unit for opening the roof window casement, this second drive unit being connected to the central unit.

The central unit can also be connected to a mains power supply.

The entire exterior shading system can be intelligently controlled by an electronic control unit so that it evaluates different operational and climate situations in cooperation with the superordinate building operation control systems.

Brief Description of Drawings

The figures illustrate some advantageous embodiments of the exterior shading system including significant details.

Figure 1 illustrates a vertical sectional view of a thermally insulated sloping roof with a roof window and a fitted exterior shading system. The arrows indicate the controlled air flow in the air gap. Symbol “ext.” indicates the exterior of the building, symbol “int.” the building interior.

Figure 1a illustrates a detail of a vertical section through a roof window, the sectional view being directed along the same plane as in Figure 1.

Figure 2a illustrates a schematic view from the exterior, from a direction perpendicular to the glazing unit plane, of the exterior shading system with partially extended shading lamellae, indicating the plane of cross-section A-A shown in Figure 3b.

Figure 2b illustrates a schematic view from the exterior from a direction perpendicular to the glazing unit plane of the exterior shading element with the shading lamellae pulled up and the upper box uncovered. The arrows indicate the controlled airflow in the air gap between the roof window glazing unit and the set of shading lamellae and also in the other air cavities in the system.

Figure 3a illustrates in a vertical cross-section of a sloping roof a set of shading lamellae that are positioned horizontally so that enough daylight can be brought into the room and at the same time allowing the photovoltaic cells on the lamellae to produce electric energy. Concurrently, Figure 3a illustrates the air gap between the roof window glazing unit and the shading lamellae system.

Figure 3b illustrates in cross-section A-A from a direction perpendicular to the glazing unit 2.1 plane, according to marking in Figure 2a, a detail of the shading lamella edge inserted into the guiding element for defining the position of the lamellae and for their movement.

Figure 4 illustrates a schematic diagram of the power and data interconnection of the elements of the entire system.

Detailed Description of Preferred Embodiments

In the following text, only some advantageous embodiments of the invention are described. However, there are many other embodiments falling within the scope of the present invention and differ from the embodiments described below, for example, in the geometry of the arrangement, different number of elements used, etc. It is also possible to combine the advantageous embodiments described below with each other.

Figure 1 illustrates a schematic vertical cross-sectional view of an exterior shading system 1 in one possible embodiment. The exterior shading system 1 comprises a support frame 3 of the exterior shading system 1. This frame is placed in the exterior on the exterior side of a roof window 2, so that, when viewed from the exterior in a direction perpendicular to the plane of a glazing unit 2.1 of the roof window 2, the outer contour of the frame 3 of the exterior shading system 1 overlaps the outer contour of a roof window casement frame 2.2, wherever the frame 3 is present. As illustrated in Figures 2a, 2b, the frame 3 of the exterior shading system 1 needs not to be necessarily closed, especially if some of its parts are connected with other parts, for example a box 16 shown, inter alia, in Figures 2a, 2b. However, the frame 3 of the exterior shading system is always mounted so as not to interfere with the opening of the casement of roof window 2, this casement being formed by a roof window casement frame 2.2 and a roof window glazing unit 2.1, as shown in detail in Figure 1a.

The exterior shading system 1 further includes a set 5 of shading lamellae 4, wherein these lamellae are movable so that they may move in different directions relative to the plane of the roof window glazing unit 2.1, and concurrently it is possible to pull down or pull up the entire set of shading lamellae so as to cover the desired portion of the roof windows glazing unit 2.1 or to keep the window completely unshaded. In order to define the position of lamellae 4, namely their rotation, and for their movement, namely for pulling up and pulling down the set 5 of lamellae 4, the frame 3 of the exterior shading system 1 is equipped with guiding elements 6 in which the set of lamellae 4 can move upwards or downwards and through which also pass the control elements for controlling the rotation of the individual lamellae, as illustrated in detail in Figure 3b. The position of

guiding elements 6 is thereby chosen in such manner, that at all positions of set 5 of lamellae 4, where this set 5 of lamellae 4 at least partially shades the roof window 2, an air gap 7 exists between the set 5 of lamellae 4 and the glazing unit 2.1 of roof window 2. At least narrow, but advantageously wider air gap 7 between the ends of the lamellae and the glazing unit 2.1 is maintained at all rotations of the positionable lamellae 4 relative to the glazing unit 2.1 plane, as illustrated in detail in Figure 3a where the lamellae 4 are rotated to a horizontal position. The air gap 7, in this case, extends from the glazing unit 2.1 plane to the ends of lamellae 4, closest to the glazing unit 2.1, and fills the space above the glazing unit 2.1 so that the space can be effectively vented, the air gap 7 being for this purpose provided with at least two vents 8.1, 8.2 communicating with the exterior. Ventilation can take place either on the basis of natural air flow or is supported and controlled by added electrical elements. It is advantageous, if the lower vent 8.1 in the lower part of air gap 7 is continuous and is permanently open and when the upper vent 8.2 in the upper part of the air gap 7 is closeable. The upper vent 8.2 may have, for example, the appearance of a lamella which opens or closes according to the data from sensors 22.1, 22.2 of climatic variables. The advantage of the ability to close the upper vent 8.2 rests, in addition to the protection from rainfall and snowfall, for example, in that if during night time in the winter period the set 5 of lamellae 4 is lowered, the air in the air gap 7 moves less, thereby contributing to the reduction of heat transfer through the window.

In Figure 1 the arrows illustrate the air flow in the cavity 7 and in the space above this cavity. Also shown is an additional fan 20, which can be placed in a box 16. The box 16 is an optional part of the device and will be described below.

The system is furthermore equipped with at least one Peltier cell 10, advantageously with several Peltier cells 10, which can cool or heat the air in the air gap 7, thereby contributing to thermal comfort in the room behind the roof window 2 as well as to energy savings in air conditioning and heating. The Peltier cells 10 are in advantageous embodiments located, for example, on at least some of the shading lamellae 4 and electrically connected so that they are turned in the summer by the cooling side towards the air gap 7. In winter, their polarity can be reversed so that the side facing the air gap 7 generates heat. They can also be located on the bottom of the fixed window frame or at the bottom of the window casement frame 2.2 or on the exterior side of the glazing unit 2.1 at the lower edge of the roof window 2. Another possibility is to place the Peltier

cells 10 on the frame 3 of the exterior shading system 1. All these positions can be combined with each other.

To control the system based on current climate conditions, it is important to have at least one sensor of climatic variables installed. Figure 1 illustrates the first sensor 22.1 of climatic variables which serves to measure temperature in air gap 7. However, the system can be supplemented by other sensors of climatic variables, for example a second sensor 22.2 for combined measurements, e.g. air temperature and humidity measurement, solar radiation intensity and precipitation. This second sensor 22.2 is located in the exterior, e.g. on the roofing, and is not shown in the figures. The number of sensors of climatic variables may also be greater.

Priority powering of the system electrical elements is provided by the photovoltaic cells 9 which are also part of the exterior shading system 1, wherein the photovoltaic cell 9 must be at least one, but it is advantageous to utilize a greater number. The photovoltaic cells 9 are preferably positioned on the shading lamellae 4 and/or on the stationary parts of the exterior shading system 1, for example on the box 16 cover facing the sun.

The photovoltaic cells 9, Peltier cells 10 and sensors 22.1, 22.2 of climatic variables are connected to the central unit 11 which includes a power supply unit 12 with an accumulator and an electronic control unit 13 which controls the storage and/or use of electric energy produced by photovoltaic cells 9. This controlled power utilization includes the powering of Peltier cells 10, but also other electrical devices that the exterior shading system may include, and which will be described below. The power supply may be direct power or power supply by energy stored in the accumulator in the power supply unit 12.

In the summer mode, for an even better air flow through the air gap 7, it is advantageous when in the area adjacent to the air gap 7, an additional space filled with air is created, communicating with air gap 7. In this additional space, at least one fan 14 is advantageously located, which increases air flow in the air gap 7 but at the same time does not prevent the view from the window. The fan 14 or fans 14 are connected to the central unit 11 for control and power supply. Energy produced by the photovoltaic cells 9 is advantageously used to drive the fan 14 or fans 14. The fan 14 can be mounted, for example, as shown in Figure 1, i.e. above the roof window in the direction of the roof

plane, typically between the roof covering and the box 16, box 16 being mounted on the top of the frame 3 of the exterior shading system 1 or inserted into this frame 3. Alternatively, box 16 is not present and frame 3 of the exterior shading system 1 is extended upward beyond the level of the fixed frame of the roof window 2. In this case, it is advantageous to place the fan 14 below this extended part of the frame 3 of the exterior shading system 1. However, other position of fan 14 or fans 14 are possible, it is sufficient, if these positions enable an air flow between gap 7, and concurrently if fans 14 do not obstruct the view from the roof window 2.

The exterior shading system 1 in an advantageous embodiment comprises also a first drive unit 15 for pulling down, pulling up and rotating the set 5 of shading lamellae 4, which is connected to the central unit 11 for power supply and control, with the energy produced by photovoltaic cells 9 being advantageously used.

It is advantageous if the system also includes the box 16 for housing the set 5 of shading lamellae 4 in pulled up or partially pulled up state. This box is typically attached to the upper part of the frame 3 of the exterior shading system 1. However, it may also be set into, e.g. frame 3 of the exterior shading system 1 or attached separately without being connected to frame 3 of the exterior shading system 1. Between the interior of box 16 and the air gap 7, an air flow connection is provided as indicated by the dashed line in Figure 1. In this dashed area, box 16 may be perforated, partially perforated or completely open. The walls of this box 16 contain at least one additional vent 17 communicating with the exterior to enhance the ventilation of the air gap 7, in particular in the case when the box is 16 contains one additional fan 20. The additional vent or vents 17 may also be advantageously positioned also to assist better ventilation of the air gap 7 by means of fan 14 or fans 14. Vents 17 are advantageously equipped with louvres preventing rain ingress. In one advantageous embodiment, they are positioned on the sides of box 16.

Furthermore, it is advantageous to place the central unit 11 in the box 16, including the power supply unit 12 with an accumulator, electronic control unit 13 and the first drive unit 15 for driving the set 5 of shading lamellae 4.

It is advantageous, if an illuminating fixture 18 is also connected to the central unit 11, to illuminate the room in the interior behind the roof window 2. To power this illuminating

fixture 18, the energy produced by the photovoltaic cells 9, which are a part of the exterior shading system, is again advantageously used, which is another new feature compared to the current state of the art. In the advantageous embodiments, the illuminating fixture 18 is mounted into the lintel or into the lining of the roof window 2 or on their surfaces. Such an arrangement is advantageous, for example, for positioning a work area in the interior because light - both natural and artificial - comes from the same direction. It is advantageous if the illuminating fixture 18 includes LED elements. Such arrangement is also advantageous for transient combined lighting if the illuminating fixture includes a light source with a spectral composition corresponding to daylight. The central unit 11 may be interconnected with the superordinate control unit 21 for operation and security of the house.

The exterior shading system 1 may also be equipped with a second drive unit 19 for opening the window casement of the roof window 2 in order to ventilate the room behind the roof window 2, this second drive unit 19 being connected to the central unit 11 and advantageously using the energy produced by the photovoltaic cells 9.

However, the central unit 11 may also be connected to the mains power supply in case the power produced by the photovoltaic cells 9 or stored in the accumulator is insufficient to power all connected devices. Mains power supply can also be used to charge the accumulator.
The connected electrical devices, such as the Peltier cells 10, power supply unit 12 with an accumulator, fans 14, first drive unit 15, illuminating fixture 18, second drive unit 19, and additional fan 20, are controlled by commands issued by the electronic control unit 13.

The electronic control unit 13 obtains and evaluates information, for example, from the first sensor 22.1 of climatic variables measuring air temperature in the air gap 7, from the second sensor 22.2 of climatic variables for the combined measurement located on the roof outside the exterior shading system, or possibly also from the building user through a remote control element and/or the superordinate control unit 21 controlling the operation and security of the house.

The electric energy produced by the photovoltaic cells is fed into the power unit 12 with an accumulator. Based on a command from the electronic control unit 13, the power supply unit 12 with an accumulator powers fans 14 and/or 20 and the Peltier cells 10.

The electric energy accumulated in the power supply unit 12 with an accumulator is further used to power the illuminating fixture 18, most advantageously located on the lintel or lining of the roof window 2. The electric energy stored in the power supply unit 12 with an accumulator is further used for the second drive unit 19 to open the window casement of roof window 2, if such a command is issued by the electronic control unit 13.

The entire exterior shading system can be intelligently controlled by the electronic control unit 13 in such manner, that it evaluates different operational and climate situations in cooperation with superordinate building control systems. For example, in a situation when following a bright winter day comes a very cold night with a bright night sky, it may be advantageous to have the entire window shaded to provide energy savings and optical comfort. The following morning, a free view through the window will be provided after pulling up the shading element, as the window will not be covered by condensation and/or frost from the exterior side. The heat exchange between the night sky and the exterior surface of the building by radiation advantageously occurs on the exterior side of the shading elements. The air gap 7 with minimal air movement when the upper vent 8.2 is closed and with switched off fans 14 and 20 also represents a certain positive contribution to reducing the heat transfer, because the air layer has a considerable thermal resistance. By changing the polarity in such a situation, the Peltier cells 10 can also be used to slightly increase the air temperature in the air gap 7. The core of the central unit 11 is an electronic control unit 13 which processes the data information from sensors 22.1 and/or 22.2, from the superordinate control unit 21 for operation and security of the house, and from the user. The connection can be both wired and wireless, or a combination of these connections. A power supply unit 12 with an accumulator is additionally placed in the central unit 11. This is power-connected to the photovoltaic cells 9, Peltier cells 10, fans 14 and 20, drive units 15 and 19, and the illuminating fixture 18.

## Industrial Applicability

The exterior shading system of the present invention is applicable to any roof window type. It significantly reduces the risk of room overheating behind the roof windows because in contrast to interior or mid-pane shading systems, it concurrently significantly

limits the solar energy access to the exterior surface of the roof window glazing unit by utilizing the set 5 of shading lamellae 4 by converting part of the solar energy into electrical energy and securing increased air movement in the air gap 7. It utilizes the generated electric energy in particular for the movement and adjustment of the set 5 of shading lamellae 4, operation of electric fans 14 and/or 20, powering of the Peltier cells 10, illuminating fixture 18, first drive unit 15 and the second drive unit 19. Such a system can operate to a large extent autonomously and/or on the basis of control algorithms, including cooperation with superordinate building management systems, for example with the superordinate control unit 21, and according to user instructions.

Reference Signs List

1 - exterior shading system for shading a roof window

2 – roof window

2.1 - roof window glazing unit

2.2 – roof window casement frame

3 – exterior shading system frame

4 – lamellae (for shading)

5 – set of (shading) lamellae 4

6 - guiding elements (for defining the position of lamellae 4 and for their movement)

7 - air gap (between set 5 of shading lamellae 4 and glazing unit 2.1 of roof window 2)

8.1, 8.2 - vents (communicating with the exterior for venting air gap 7)

8.1 - bottom vent (permanently open in preferred embodiment)

8.2 - upper vent (closable in preferred embodiment)

9 - photovoltaic cells

10 - Peltier cells

11 - central unit

12 - power supply unit with an accumulator

13 - electronic control unit

14 - fans

15 - first drive unit (driving set 5 of shading lamellae 4)

16 - box (for positioning set 5 of shading lamellae 4 in extended or partially extended state)

17 - additional vent (communicating with the exterior, usually covered by rain louver)

18 - illuminating fixture

19 - second drive unit (driving opening of roof window 2 casement)

20 - additional fan

21 - superordinate control unit (for operation and house security system)

22.1 - first sensor of climatic variables (for temperature measurement)

22.2 - second sensor of climatic variables (for combined measurements, i.e. for measuring air temperature and humidity, solar radiation intensity and occurrence of precipitation)

# CLAIMS

1. An exterior shading system for shading a roof window, comprising a frame (3) of an exterior shading system (1), located in the exterior on the outside of a roof window (2), a set (5) of shading lamellae (4) and at least one photovoltaic cell (9), **characterized in that** the dimensions and the positioning of the frame (3) of the exterior shading system (1) are such that when viewed from the exterior in the direction perpendicular to the plane of a glazing unit (2.1) of the roof window (2), the outer contour of the frame (3) wherever the frame (3) is present, overlaps the outer contour of the roof window (2) casement frame (2.2), the frame (3) of the exterior shading system (1) carrying guiding elements (6) for defining the position of the lamellae (4) and for their movement, wherein the guiding elements (6) are arranged in such manner that at all positions of the set (5) of lamellae (4), in which the set (5) of lamellae (4) at least partially shades the roof window (2), an air gap (7) between the set (5) of lamellae (4) and a glazing unit (2.1) of the roof window (2) is present, the air gap (7) being provided with at least two vents (8.1, 8.2) communicating with the exterior to ventilate this air gap (7), wherein the system further comprises at least one Peltier cell (10) and at least one sensor (22.1, 22.2) of climatic variables, wherein the photovoltaic cells (9), Peltier cells (10) and sensors (22.1, 22.2) of climatic variables are interconnected with a central unit (11) including a power supply unit (12) with an accumulator and an electronic control unit (13) for the storage and/or controlled use of the generated electric energy.

2. The exterior shading system for shading a roof window according to claim 1, **characterized in that** the Peltier cells (10) are mounted on the frame (3) of the exterior shading system (1) and/or on the shading lamellae (4) and/or on the lower part of the fixed window frame and/or on the lower part of the roof window (2) casement frame (2.2) and/or on the outside of the glazing unit (2.1) at the lower edge of the roof window (2).

3. The exterior shading system for shading a roof window according to claims 1 or 2, **characterized in that** in the area adjacent to the air gap (7), an additional space is provided filled with air which communicates with the air gap (7), and in

this additional space at least one fan (14) is installed, interconnected to the central unit (11) for its control and power supply.

4. The exterior shading system for shading a roof window according to any of claims 1 to 3, **characterized in that** at least one first sensor (22.1) of climatic variables is located in the air gap (7), this sensor being a sensor for measuring the temperature, and/or that in the exterior, at least one second sensor (22.2) of climatic variables is located, this sensor being a sensor for combined measurement of multiple climatic variables.

5. The exterior shading system for shading a roof window according to any of claims 1 to 4, **characterized in that** it additionally comprises a first drive unit (15) for driving the set (5) of shading lamellae (4), which is connected to the central unit (11) for its control and power supply.

6. The exterior shading system for shading a roof window according to any of claims 1 to 5, **characterized in that** the air gap (7) is provided with a bottom vent (8.1) which is permanently open and an upper vent (8.2) in the upper part which is closeable.

7. The exterior shading system for shading a roof window according to any of claims 1 to 6, **characterized in that it** additionally includes a box (16) for the placement of the set (5) of shading lamellae (4) in a retracted or partially retracted position, wherein the box (16) is attached to the upper part of frame (3) of the exterior shading system (1), with an air connection being formed between the interior of the box (16) and the air gap (7), wherein this box (16) additionally contains the central unit (11) comprising the power supply unit (12) with the accumulator, electronic control unit (13) and the first drive unit (15) for driving the set (5) of shading lamellae (4), and wherein at least one additional vent (17) communicating with the exterior for ventilation of the air gap (7) is present in the walls of the box (16).

8. The exterior shading system for shading a roof window according to any of claims 1 to 7, **characterized in that** the photovoltaic cells (9) are located on the shading lamellae (4) and/or on the non-moving parts of the exterior shading system (1).

9. The exterior shading system for shading a roof window according to any of claims 1 to 8, **characterized in that** an illuminating fixture (18) is connected to the central unit (11) to illuminate the room in the interior behind the roof window (2).

10. The exterior shading system for shading a roof window according to claim 9, **characterized in that** the illuminating fixture (18) is mounted into the lintel or into the lining of the roof window (2) or on their surfaces.

11. The exterior shading system for shading a roof window according to any of claims 1 to 10**, characterized in that** the central unit (11) is connected to a superordinate control unit (21) for operation and security of the house.

12. The exterior shading system for shading a roof window according to any of claims 1 to 11, **characterized in that** it is equipped with a second drive unit (19) for driving the opening of the roof window (2) casement, the second drive unit (19) being connected to the central unit (11).

13. The exterior shading system for shading a roof window according to any of claims 1 to 12, **characterized in that** the central unit (11) is connected to a mains power supply.

AMENDED CLAIMS
received by the International Bureau on 25 June 2019 (25.06.2019)

# CLAIMS

1. A set for active control of solar gains and of heat transfer into rooms under pitched roofs comprising a roof window, electric and electronic elements and an exterior shading system for shading the roof window (2), wherein the exterior shading system (1) comprises a frame (3) of an exterior shading system (1), located in the exterior on the outside of the roof window (2), a set (5) of shading lamellae (4) and at least one photovoltaic cell (9), **characterized in that** the dimensions and the positioning of the frame (3) of the exterior shading system (1) are such that when viewed from the exterior in the direction perpendicular to the plane of a glazing unit (2.1) of the roof window (2), the outer contour of the frame (3) wherever the frame (3) is present, overlaps the outer contour of the roof window (2) casement frame (2.2), the frame (3) of the exterior shading system (1) carrying guiding elements (6) for defining the position of the lamellae (4) and for their movement, wherein the guiding elements (6) are arranged in such manner that at all positions of the set (5) of lamellae (4), in which the set (5) of lamellae (4) at least partially shades the roof window (2), an air gap (7) between the set (5) of lamellae (4) and a glazing unit (2.1) of the roof window (2) is present, the air gap (7) being provided with at least two vents (8.1, 8.2) communicating with the exterior to ventilate this air gap (7), wherein the system further comprises at least one Peltier cell (10) and at least one sensor (22.1, 22.2) of climatic variables, wherein the photovoltaic cells (9), Peltier cells (10) and sensors (22.1, 22.2) of climatic variables are interconnected with a central unit (11) including a power supply unit (12) with an accumulator and an electronic control unit (13) for the storage and/or controlled use of the generated electric energy.

2. The set according to claim 1, **characterized in that** the Peltier cells (10) are mounted on the frame (3) of the exterior shading system (1) and/or on the shading lamellae (4) and/or on the lower part of the fixed window frame and/or on the lower part of the roof window (2) casement frame (2.2) and/or on the outside of the glazing unit (2.1) at the lower edge of the roof window (2).

3. The set according to claims 1 or 2, **characterized in that** in the area adjacent to the air gap (7), an additional space is provided filled with air which communicates

with the air gap (7), and in this additional space at least one fan (14) is installed, interconnected to the central unit (11) for its control and power supply.

4. The set according to any of claims 1 to 3, **characterized in that** at least one first sensor (22.1) of climatic variables is located in the air gap (7), this sensor being a sensor for measuring the temperature, and/or that in the exterior, at least one second sensor (22.2) of climatic variables is located, this sensor being a sensor for combined measurement of multiple climatic variables.

5. The set according to any of claims 1 to 4, **characterized in that** it additionally comprises a first drive unit (15) for driving the set (5) of shading lamellae (4), which is connected to the central unit (11) for its control and power supply.

6. The set according to any of claims 1 to 5, **characterized in that** the air gap (7) is provided with a bottom vent (8.1) which is permanently open and an upper vent (8.2) in the upper part which is closeable.

7. The set according to any of claims 1 to 6, **characterized in that it** additionally includes a box (16) for the placement of the set (5) of shading lamellae (4) in a retracted or partially retracted position, wherein the box (16) is attached to the upper part of frame (3) of the exterior shading system (1), with an air connection being formed between the interior of the box (16) and the air gap (7), wherein this box (16) additionally contains the central unit (11) comprising the power supply unit (12) with the accumulator, electronic control unit (13) and the first drive unit (15) for driving the set (5) of shading lamellae (4), and wherein at least one additional vent (17) communicating with the exterior for ventilation of the air gap (7) is present in the walls of the box (16).

8. The set according to any of claims 1 to 7, **characterized in that** the photovoltaic cells (9) are located on the shading lamellae (4) and/or on the non-moving parts of the exterior shading system (1).

9. The set according to any of claims 1 to 8, **characterized in that** an illuminating fixture (18) is connected to the central unit (11) to illuminate the room in the interior behind the roof window (2).

10. The set according to claim 9, **characterized in that** the illuminating fixture (18) is mounted into the lintel or into the lining of the roof window (2) or on their surfaces.

11. The set according to any of claims 1 to 10**, characterized in that** the central unit (11) is connected to a superordinate control unit (21) for operation and security of the house.

12. The set according to any of claims 1 to 11, **characterized in that** it is equipped with a second drive unit (19) for driving the opening of the roof window (2) casement, the second drive unit (19) being connected to the central unit (11).

13. The set according to any of claims 1 to 12, **characterized in that** the central unit (11) is connected to a mains power supply.

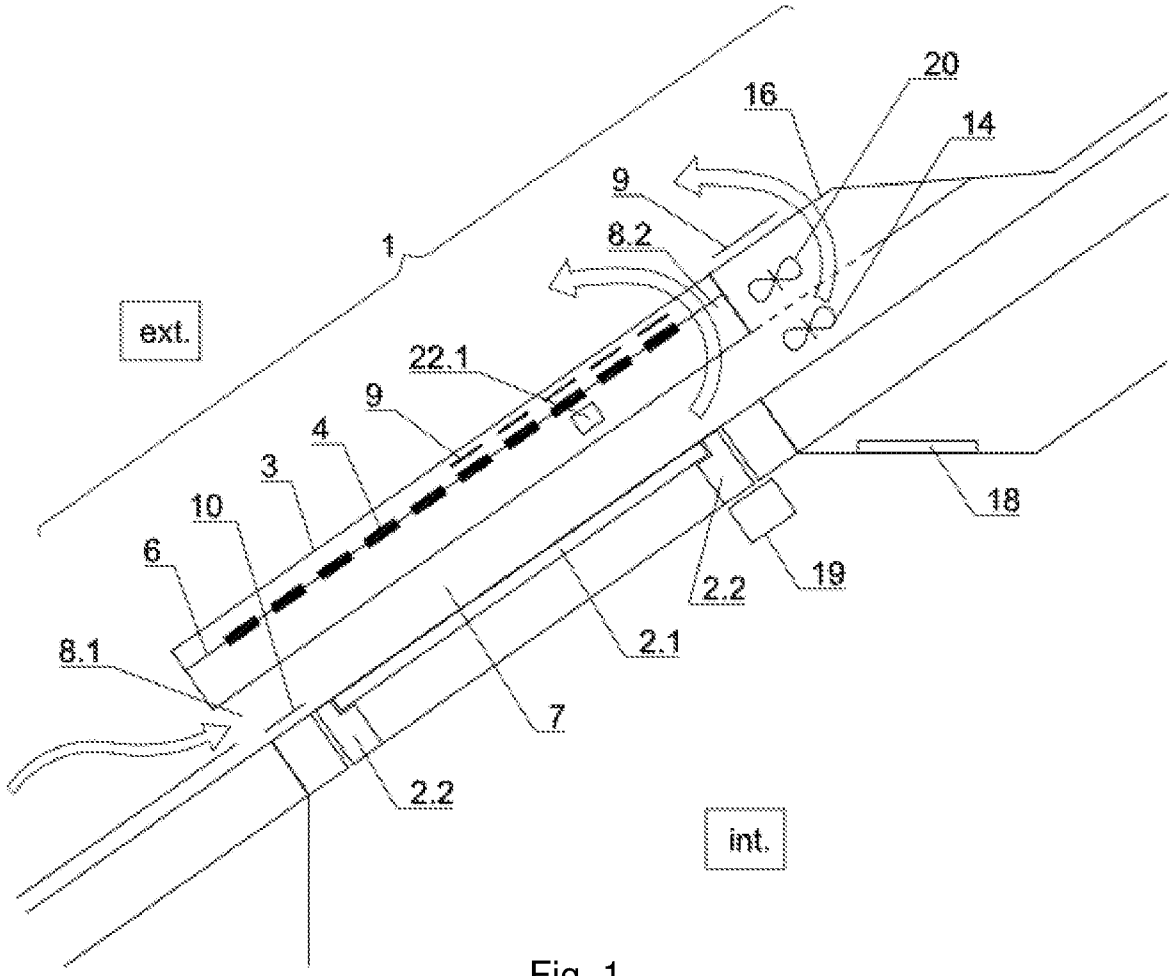


Fig. 1

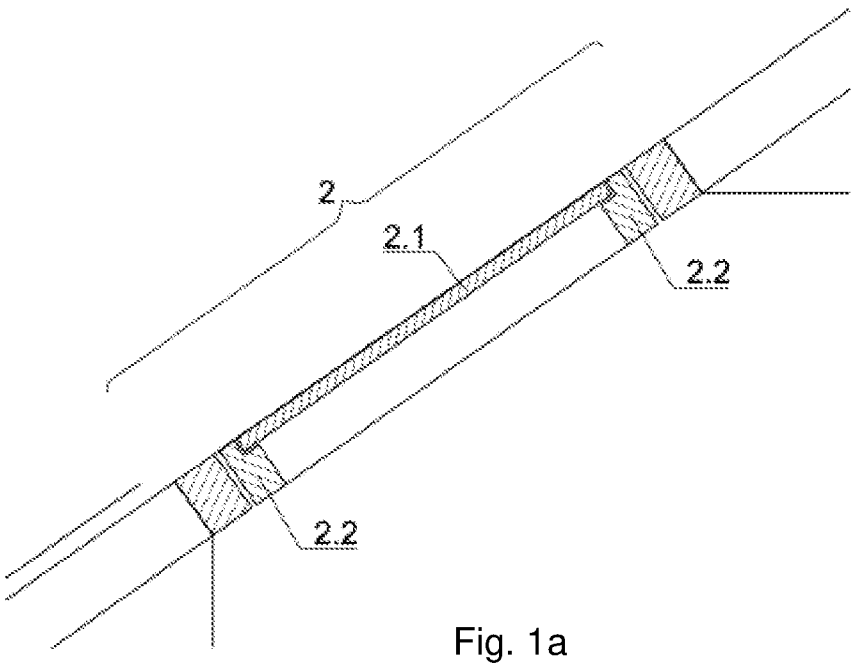


Fig. 1a

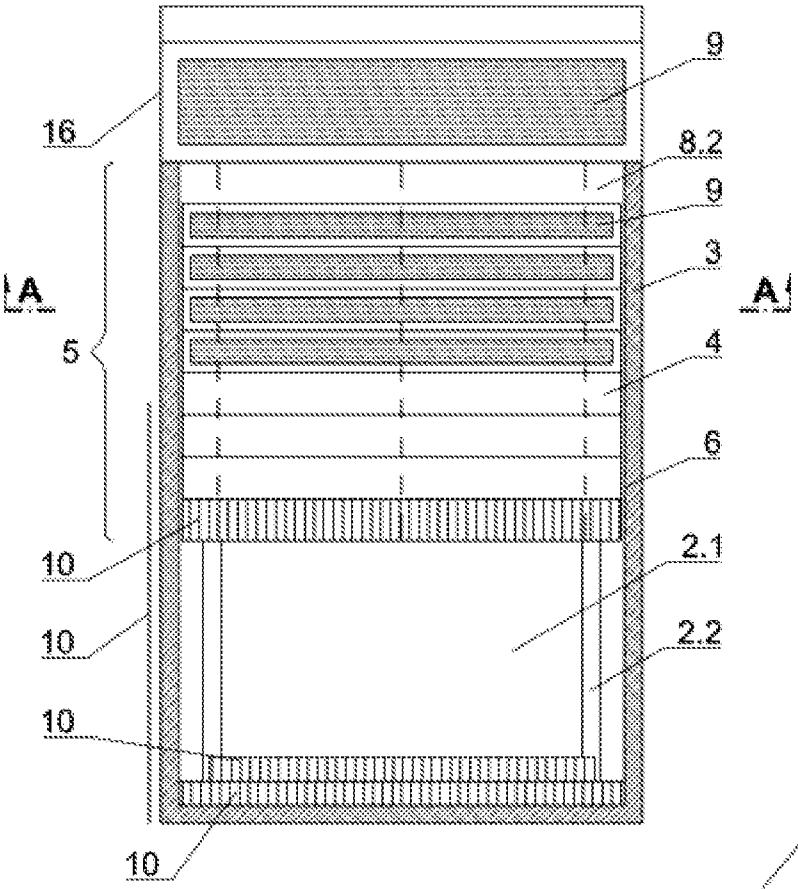


Fig. 2a

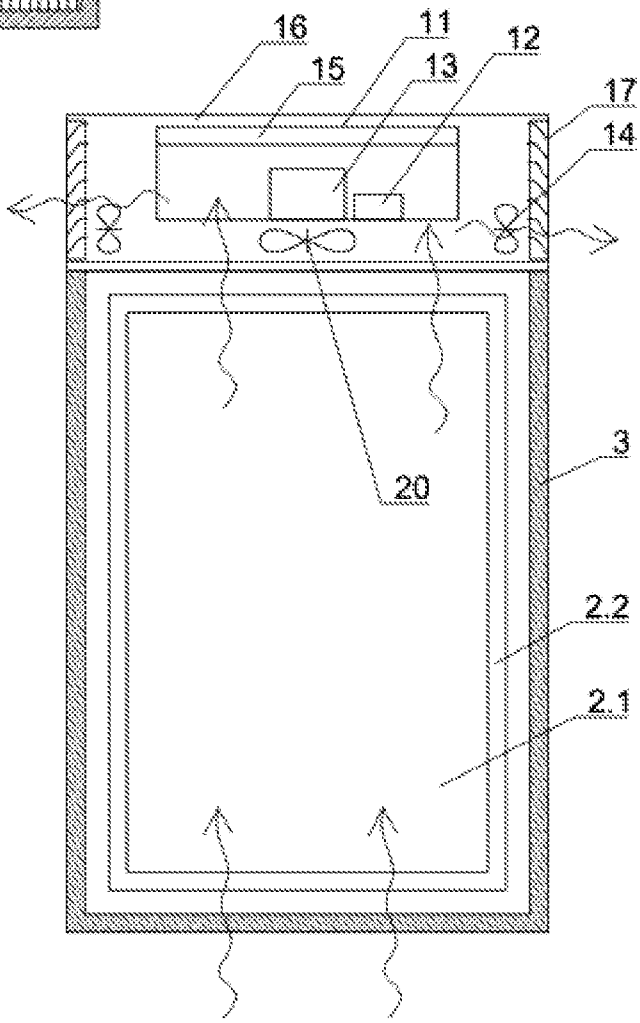


Fig. 2b

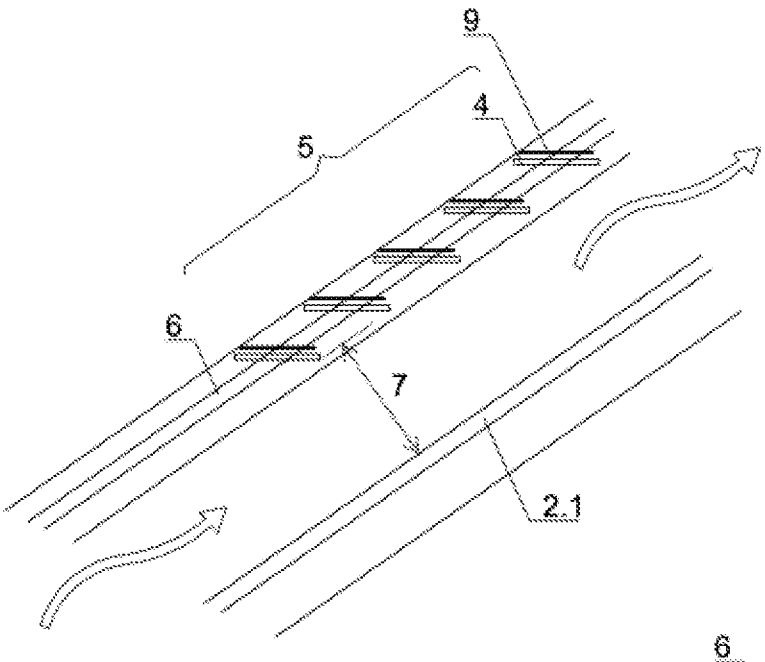


Fig. 3a

Cross-section A-A

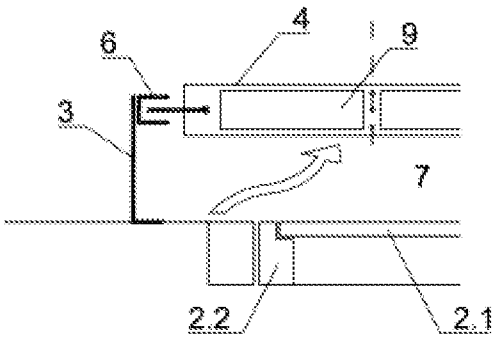


Fig. 3b

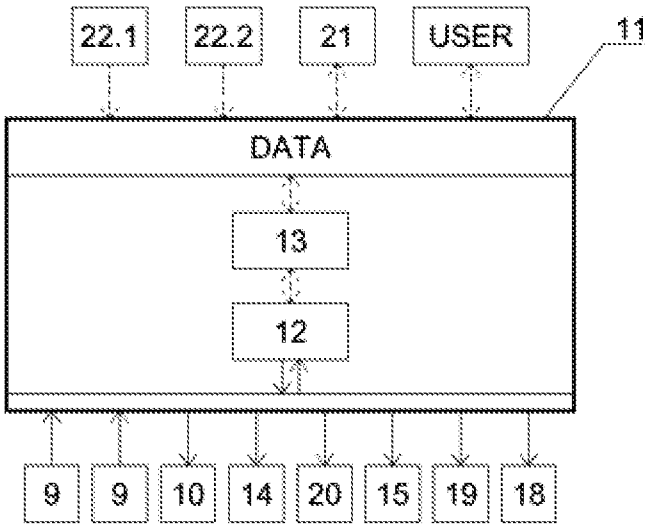


Fig. 4

# INTERNATIONAL SEARCH REPORT

International application No
PCT/CZ2019/050004

A. CLASSIFICATION OF SUBJECT MATTER
INV. E06B7/02 E06B9/30 E06B9/32
ADD.

According to International Patent Classification (IPC) or to both national classification and IPC

B. FIELDS SEARCHED

Minimum documentation searched (classification system followed by classification symbols)
E06B E04F

Documentation searched other than minimum documentation to the extent that such documents are included in the fields searched

Electronic data base consulted during the international search (name of data base and, where practicable, search terms used)
EPO-Internal, WPI Data

C. DOCUMENTS CONSIDERED TO BE RELEVANT

| Category* | Citation of document, with indication, where appropriate, of the relevant passages | Relevant to claim No. |
|---|---|---|
| X | CN 104 879 051 A (UNIV HUNAN)<br>2 September 2015 (2015-09-02) | 1-6,8-13 |
| A | figures 1-3 | 7 |
| | ----- | |
| A | DE 23 46 905 A1 (GUSS SYLVESTER)<br>10 April 1975 (1975-04-10)<br>figures 1,2<br>page 9 | 1 |
| | ----- | |
| A | DE 20 2013 105438 U1 (JOMA DÄMMSTOFFWERK GMBH [DE]) 3 March 2015 (2015-03-03)<br>figure 2 | 7 |
| | ----- | |

☐ Further documents are listed in the continuation of Box C.

☒ See patent family annex.

* Special categories of cited documents :

"A" document defining the general state of the art which is not considered to be of particular relevance

"E" earlier application or patent but published on or after the international filing date

"L" document which may throw doubts on priority claim(s) or which is cited to establish the publication date of another citation or other special reason (as specified)

"O" document referring to an oral disclosure, use, exhibition or other means

"P" document published prior to the international filing date but later than the priority date claimed

"T" later document published after the international filing date or priority date and not in conflict with the application but cited to understand the principle or theory underlying the invention

"X" document of particular relevance; the claimed invention cannot be considered novel or cannot be considered to involve an inventive step when the document is taken alone

"Y" document of particular relevance; the claimed invention cannot be considered to involve an inventive step when the document is combined with one or more other such documents, such combination being obvious to a person skilled in the art

"&" document member of the same patent family

| Date of the actual completion of the international search | Date of mailing of the international search report |
|---|---|
| 26 April 2019 | 06/05/2019 |

| Name and mailing address of the ISA/ | Authorized officer |
|---|---|
| European Patent Office, P.B. 5818 Patentlaan 2<br>NL - 2280 HV Rijswijk<br>Tel. (+31-70) 340-2040,<br>Fax: (+31-70) 340-3016 | Tänzler, Ansgar |

1

# INTERNATIONAL SEARCH REPORT

Information on patent family members

International application No
PCT/CZ2019/050004

| Patent document cited in search report | Publication date | Patent family member(s) | Publication date |
|---|---|---|---|
| CN 104879051 A | 02-09-2015 | NONE | |
| DE 2346905 A1 | 10-04-1975 | NONE | |
| DE 202013105438 U1 | 03-03-2015 | NONE | |