July 27, 1937. S. WHISK 2,088,454

RADIATION ELIMINATION

Filed Aug. 2, 1935 2 Sheets-Sheet 1

Fig. 1.

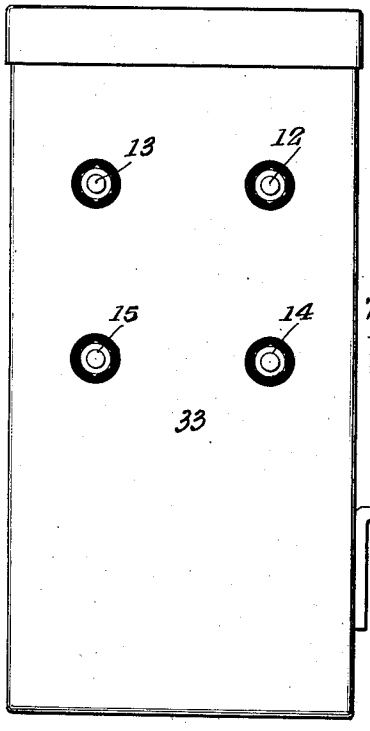

Fig. 2.

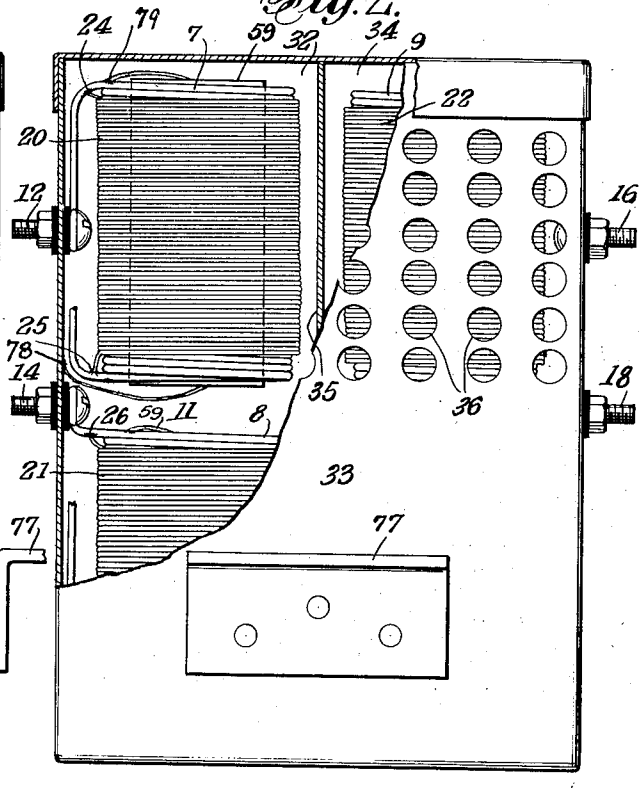

SAMUEL WHISK
INVENTOR

BY Philip S. McKean
ATTORNEY

July 27, 1937. S. WHISK 2,088,454

RADIATION ELIMINATION

Filed Aug. 2, 1935 2 Sheets-Sheet 2

Fig. 3.

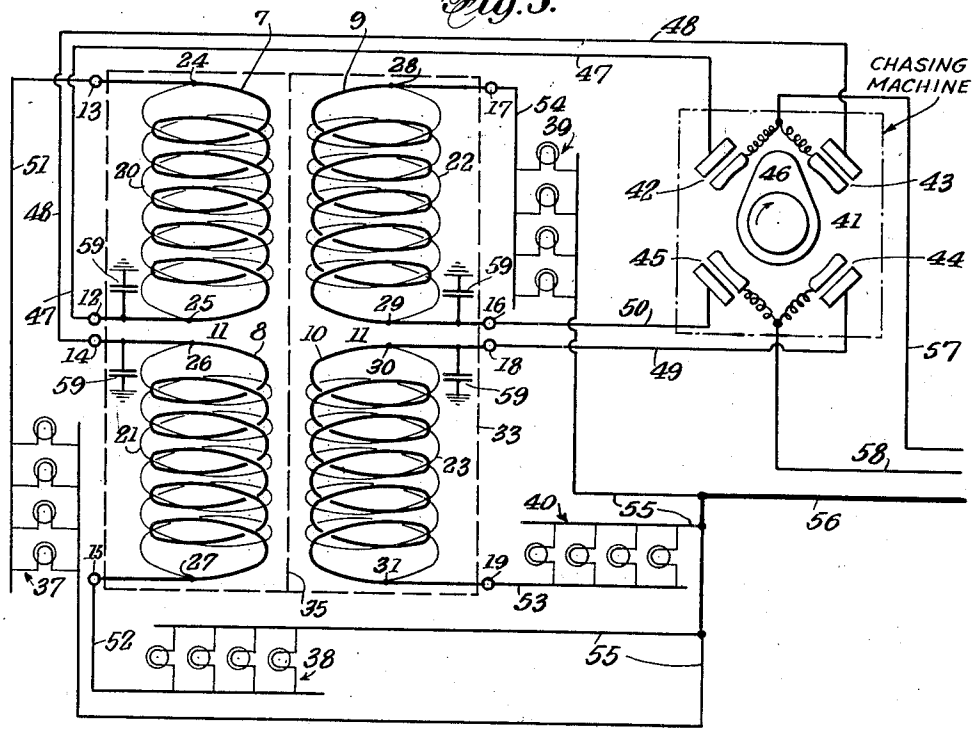

Fig. 4.

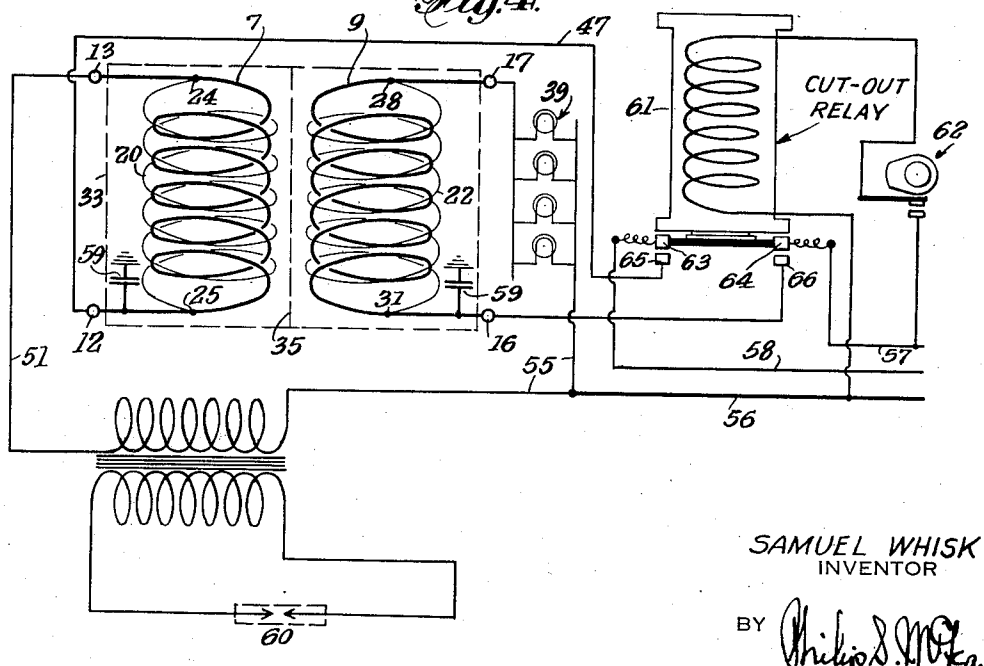

SAMUEL WHISK
INVENTOR

BY Philip S. McKean.
ATTORNEY

Patented July 27, 1937 2,088,454

UNITED STATES PATENT OFFICE

2,088,454

RADIATION ELIMINATION

Samuel Whisk, Brooklyn, N. Y., assignor to Sign Animation Corporation, New York, N. Y., a corporation of Delaware

Application August 2, 1935, Serial No. 34,332

9 Claims. (Cl. 178—44)

This invention relates to the prevention and elimination of interfering radio frequencies.

It is well known that sign flashers and other electrical installations, automotive equipment and the like set up electrical disturbances which seriously interfere with radio reception. Various methods and apparatus have been proposed to overcome these disturbing effects but so far as known these have only been partly successful.

The objects of this invention are to prevent radiation of disturbing frequencies and to accomplish this desirable result with relatively simple and inexpensive equipment readily applicable to existing situations.

These and other desirable objects are attained by the novel features of construction, combinations and relations of parts hereinafter described, illustrated in the accompanying drawings and broadly covered in the claims annexed.

The drawings referred to illustrate certain practical forms the invention may follow, but it will be appreciated that the actual structure may vary all within the true intent and broad scope of the invention.

Figure 1 is an end view of one of the complete eliminator units.

Figure 2 is a side elevation of the same, broken away and partly in section to illustrate arrangement and mounting of the coils therein.

Figure 3 is a diagrammatic representation of the unit as connected for use with a flashing sign.

Figure 4 is a diagrammatic view illustrating a simpler form of the unit in use with another type of electric sign.

The filter or frequency changing unit illustrated in Figures 1, 2 and 3 is made up of four heavy current carrying choke or inductance coils arranged in reversely related pairs and surrounded each by a reversely wound high resistance opposing, neutralizing or bucking coil. In these views the load carrying coils of the first pair are designated 7 and 8 and those of the second pair appear at 9, 10. The coils of each pair are oppositely disposed in axial alinement one above the other with their opposing ends separated by spaces 11.

The wire of these load carrying coils, as indicated particularly in Figure 2, is heavy enough to render them self-sustaining and they therefore may be supported by their terminal posts. Thus the two ends of the coil 7 are shown brought to the terminal posts 12, 13; coil 8 is supported by terminals 14, 15; coil 9 is supported by terminals 16, 17 and coil 10 is supported by terminals 18, 19.

The coils of the first pair (7, 8) are shown in Figure 3 as wound right-handedly but as having their adjoining opposing ends connected with the input terminals 12, 14, so that current will traverse them in opposite directions, and similarly, the coils of the second pair (9, 10) are shown as both wound left-handedly and as having their adjoining ends connected with the input terminals 16, 18.

The high resistance windings for coils 7, 8 and 9, 10 are designated 20, 21, 22, 23, respectively, and they are shown in each instance as each wound reversely over the coil with which it is associated and as having its ends connected as at 24, 25, 26, 27, 28, 29, 30, 31 with the opposite end portions of the supporting coil.

While the coils of each pair are separated but not magnetically shielded from each other, the two coils of one pair are shielded from the two coils of the other pair. Thus, as shown particularly in Figure 2, the coils of the first pair are mounted in one compartment 32 of the shielding "can" 33 and the coils of the other pair are mounted in a second compartment 34, the two compartments being defined by the intermediate shielding partition 35. The end walls of this can are utilized as supports for the coil terminals and the upper portion of the can is shown as perforated at 36 for air circulating and cooling purposes.

In Figure 3 the four coil unit is shown in use as a disturbance eliminator for the four banks of lamps 37, 38, 39, 40 of a flashing sign controlled from the chasing machine 41. The latter is indicated as consisting of the four sets of circuit closing contacts 42, 43, 44, 45, closed successively by the rotating cam 46 and connected respectively by wiring 47, 48, 49, 50 with the input terminals 12, 14, 18 and 16. The opposite terminals of these respective coils, namely 13, 15, 19 and 17 are connected by wiring 51, 52, 53, 54, with the lamp banks 37, 38, 40 and 39. These four sets of lamps are indicated as having common returns 55 to the intermediate or neutral feed wire 56. The other leads 57, 58 of the three wire feed system indicated are shown connected, the first to one pair of chaser contacts 42, 43, and the second to the other pair of chaser contacts 44, 45.

The input ends of the coils are shown each connected to ground through an inductive condenser at 59, the effect of which, in conjunction with the choke and bucking coils, is to change any

radiated frequency from interfering to a non-interfering character.

The load carrying coils 7, 8, 9, 10 necessarily are heavy enough to properly carry the lamp loads, but the surrounding coils are for neutralizing purposes only and consequently may be of lighter wire and higher resistance. The number of turns in the two windings of each coil are subject to exact computation depending upon the particular load.

Figure 4 shows how for a two circuit flasher only two coils are required, these being constructed and connected as above described for the coils 7 and 9, corresponding reference characters being applied. In this view, the load on the first coil is shown as an inductive load such as provided by a neon sign 60, instead of the ordinary noninductive load provided by a bank of lamps. Also in this view, the circuits are shown as under control of a cut-out relay 61 operated from motor driven timing contacts 62 to raise and drop circuit closing contacts 63, 64 on the contacts 65, 66, connected respectively with the input sides of the load carrying coils 7 and 9.

The invention differs from so-called resistor suppressors in that radiation of disturbing frequencies is avoided by converting such frequencies to other frequencies non-interfering in character. The invention, therefore, is of distinct utility in connection with automotive equipment because objectionable radiation can be avoided without cutting down the power or efficiency of the motor, such as results with the use of so-called suppressors, which usually interpose resistance running from about 20,000 to about 60,000 ohms.

The grounding condensers may be of the rolled inductive type such as illustrated at 59 in Figure 2 and these, in such a unit, may be mounted within the coils with which they are connected, having leads connected with the input ends of the coils at 79 and other leads grounded to the enclosing casing as at 78.

The casing itself may have a common grounding connection, such as the bracket 77 on one side of the same for mounting it on the motor or other apparatus with which it is used.

The number of frequency changer choke coils used may vary with different installations depending upon the number of circuits, etc. Figs. 1 to 3 show four sets of coils for protecting four circuits. In Fig. 4 only two coils are employed. Other installations may require only one of the frequency changer coils.

While relative values necessarily will vary, in a sign flasher system such as first illustrated, it has been found practical to use No. 10 wire for the load carrying coil with a total D. C. resistance of .1 ohm and for the overwound neutralizing coil No. 36 wire with a total D. C. resistance of 10 ohms.

For the grounding condensers, 59, in Figs. 1 to 4, a capacity of 1/4 microfarad has been found suitable.

Units such as illustrated in Figs. 1 and 2 may be made up for apartment house use and for hotels and the like and be connected direct to the incoming mains at the meter. These are particularly useful in the neighborhood of electro-therapeutical institutions which radiate various disturbing frequencies from X-ray, violet ray and other machines.

The unitary construction of the coils shown in Figs. 1 and 2, with both the neutralizing winding and the condenser carried by the load coil and the supporting of such unit from the terminals is particularly advantageous, enabling these units to be made up in quantity and then quickly mounted in the cases as required.

What is claimed is:

1. A radiation eliminating unit comprising a shielded load carrying coil, grounded capacity connected with the input end of said load carrying coil and a reversely wound neutralizing coil of higher resistance connected in shunt relation to the ends of said load carrying coil.

2. A radiation eliminating unit comprising a shielded load carrying coil, grounded capacity connected with the input end of said load carrying coil and a reversely wound neutralizing coil of higher resistance connected in shunt relation to the ends of said load carrying coil, said neutralizing coil being mounted directly on and supported by said load carrying coil.

3. In apparatus of the character disclosed, a metal containing and electrically shielding case, insulating terminals mounted on said case, a load carrying coil within the case and supported from said insulated terminals, a reversely wound neutralizing coil on said load carrying coil and having its ends electrically connected to opposite ends of the load carrying coil and a condenser within and also supported by said load carrying coil, said condenser having one terminal electrically connected with one end of the load carrying coil and having another terminal electrically connected with the metal case.

4. A combination as in claim 3, in which there is a plurality of the coil units described, electrically shielded from each other within the case.

5. The combination as in claim 3, in which one of the terminals mentioned is connected with the "hot" leg of an electric circuit and the second terminal with the neutral side of the same circuit and in which the case is grounded and the condenser terminal which is connected with the load carrying coil is connected with that end of the coil which is connected with the hot leg of the circuit.

6. Apparatus of the character disclosed, comprising load carrying coils in side-by-side shielded relation, said coils being oppositely wound and having input terminals at the same ends of the same, grounding condensers connected with said input ends of said coils and reversely wound neutralizing coils on said load carrying coils and connected at opposite ends with the opposite ends of the load carrying coils on which they are mounted.

7. Apparatus as disclosed, comprising a first pair of loading carrying coils in opposed spaced end-to-end relation, wound in the same direction and having input terminals and grounding condensers at their spaced opposing ends, a second pair of similarly constituted and arranged coils in shielded relation to the first pair of coils but wound reversely from the first pair of coils and also having grounding condensers at the spaced opposed input ends of the same.

8. Apparatus as disclosed, comprising a first pair of load carrying coils in opposed spaced end-to-end relation, wound in the same direction and having input terminals and grounding condensers at their spaced opposing ends, a second pair of similarly constituted and arranged coils in shielded relation to the first pair of coils but wound reversely from the first pair of coils and also having grounding condensers at the spaced opposed input ends of the same and a reversely wound neutralizing coil on each load carrying

coil and having its ends electrically connected with the opposite ends of said loading carrying coil.

9. In combination with an electrical circuit including an intermittently operating circuit breaker, a load carrying coil in said breaker circuit, a reversely wound bucking coil in shunt relation to said load coil and connected at one end with one end of said load coil and grounded capacity connected with the other ends of said load carrying and bucking coils.

SAMUEL WHISK.