Nov. 4, 1924. 1,513,939

H. C. SMITH

SHIRT PROTECTOR

Filed Oct. 26, 1923

Fig. 1.

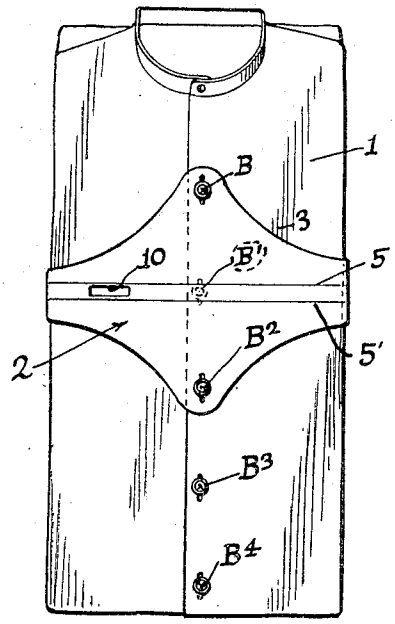


Fig. 2.

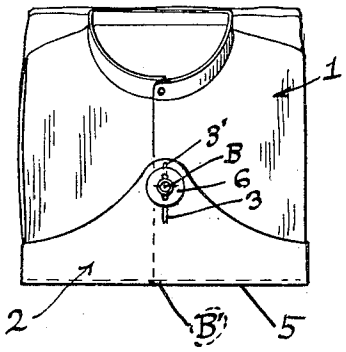


Fig. 3.

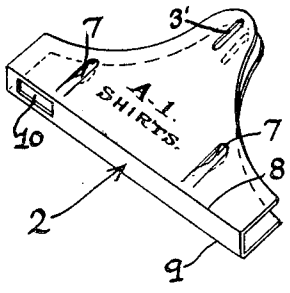


Inventor.
HARRY C. SMITH.
by Hazard and Miller
Attorneys.

Witness.
W. Hall

Patented Nov. 4, 1924. 1,513,939

# UNITED STATES PATENT OFFICE.

HARRY C. SMITH, OF SANTA BARBARA, CALIFORNIA, ASSIGNOR OF ONE-HALF TO MARION R. GRAY, OF LOS ANGELES, CALIFORNIA.

## SHIRT PROTECTOR.

Application filed October 26, 1923. Serial No. 670,869.

*To all whom it may concern:*

Be it known that I, HARRY C. SMITH, a citizen of the United States, residing at Santa Barbara, in the county of Santa Barbara and State of California, have invented new and useful Improvements in Shirt Protectors, of which the following is a specification.

My present invention being referred to as a shirt protector, it should be understood that it is an object of this invention to provide simple and effective means for the protecting of a shirt, or a shirt-waist, or undergarment, or the like, after the same has been manufactured and folded, or laundered and folded, in a usual manner, to prevent soiling or undue wear, as the shirts, or equivalent garments, may be supported on shelves or displayed for sale or otherwise handled.

It is a common observation that after shirts have been suitably folded and pinned in a customary manner, and whether or not cardboard or the like is inserted in order to assist in the preservation of the shape thereof, the fold which commonly extends transversely across the bosom of a shirt is likely to show soiling or wear, as a result of contact with dust upon a shelf or an enclosing case, or as a result of handling, or contact with the garments of employees or patrons of a store on whose counters the same may be displayed for sale; and it is an object of this invention to provide simple and effective means, preferably in the form of a sheet of suitable material properly cut and apertured to permit of ready attachment to a shirt or similar garment, and to permit of ready detachment therefrom and repeated reuse, for protecting the mentioned transverse fold which ordinarily extends across a shirt front in the vicinity of the third button thereon.

It is an object of this invention to provide a shirt protector which may be formed simply of a sheet of heavy paper, or the like, transversely creased or foldable and preferably provided with a pair of elongated apertures resembling button-holes and adapted to fit over the button of a shirt or similar garment, and to be secured thereon; and, in a preferred embodiment of my invention, the mentioned apertures or slits, may optionally be made of such length as to permit of a suitable adjustment adapting the same to use upon shirts whose buttons may be differently spaced.

It is an object of this invention to re-enforce a protector capable of adjustment in the manner described or otherwise, and also capable of reuse, and it is within the scope of this invention to employ sheet metal, such as suitably cut units formed from aluminum, or the like, made up in standard sizes and adapted each removably to receive one or more shirts or similar garments, the embodiment of my invention here referred to being optionally provided with resilient clips, which may optionally be of such character as alone removable to retain a protector upon a shirt or the like.

Other objects of my invention will appear from the following description of preferred and alternative embodiments thereof, taken in connection with the appended claims and the accompanying drawings, in which:

Fig. 1 may be regarded as a plan view showing a shirt partially folded and provided with a protector of advantageous form, as the same would appear when spread out flat, in preparation for a final folding transversely of the bosom thereof.

Fig. 2 is a corresponding view, showing the appearance after a final folding transversely of the shirt and the protector thereof.

Fig. 3 is a separate view of a folder shown in perspective, this view illustrating incidentally a proposed type of retaining clips suggested for use in connection with protectors formed of sheet metal or the like.

Referring to the details of that specific embodiment of my invention shown in Figs. 1 and 2, 1 being a shirt or similar garment, folded lengthwise in a usual manner, this shirt being provided with a series of buttons B, B′, $B^2$, $B^3$, and $B^4$, 2 is a shirt protector, which may consist simply of a sheet of comparatively tough paper, corresponding in width to the width of a shirt or other garment to be protected and provided at 3 and 4 with slits or button-holes extending longitudinally thereof, and suitably spaced to permit of the insertion of buttons, such as the buttons B′ and $B^4$ therethrough, to secure the same, the protector 2 being preferably pro-

ded in advance with a crease or creases 5, , extending transversely thereof and adapt- l to serve as a guide in the final folding of shirt into the form shown in Fig. 2, from n inspection of which it will be obvious that he crease formed by the final folding re- erred to is fully protected by the sheet of paper or equivalent material extending there- over.

Although I have above referred to the employment of tough paper as a suitable material, for use in the preparation of my novel shirt protectors, it should be understood that any preferred alternative material such as light cardboard, or glasine paper, or sheet metal, or celluloid, or cloth, or a composite material, such as a layer of cloth protected by a layer of tough paper, may be employed according to the requirements of trade or the conditions of use, it being also within my invention to employ either a plain material or a colored or striped or figured material, and that any material employed may optionally be provided with decorative or printed matter, such as an advertisement, trade mark or description, and also that the outline of my protector may be modified or varied as desired, either for artistic or utilitarian purposes, and that when slits of the character referred to are relied upon as securing means, they may be employed in any suitable number and either spaced in exact accordance with the requirements of a particular garment whose buttons are positioned at pre- protectors as are formed of sheet metal, I may optionally provide any sheet metal shirt protectors with additional securing means such as the resilient fingers 7, shown in Fig. 3 as stamped from and integral with the protector proper, although bent downward and curved in a manner facilitating the insertion of a shirt, or the like, and preventing any accidental relative displacement.

It will be obvious that when my shirt protectors are formed of sheet metal, of sufficient thickness to give the same a comparative permanency of form, a shirt, or the like, will have to be given its final fold before it shall be inserted therein, the interval between the creases or corners 8, 9, of a protector being in all cases, when two such creases are employed, preferably adapted to the thickness of the garment to be retained and protected thereby; and the dimensions of my protectors may in any case be determined with reference not only to the protection and to the proper display of a garment, but with due reference also to convenience in the handling or packing or stacking of garments, and to their disposition either in boxes or in show-cases or upon shelves, the adjustability and detachability of my protectors being such as to render them suitable for repeated reuse in connection with either similar or dissimilar shirts or other garments.

Although I have herein described one complete embodiment of my invention, and various alternative embodiments thereof, it will be obvious that various features of my invention might be independently employed,

der visible the fold of the garment underlying the fold of said sheet.

3. A protector for folded garments comprising a sheet of material adapted to be placed over a fold of the garment and having apertures adapted to engage the front buttons of the garment.

4. A protector for folded garments comprising a sheet of material adapted to be placed over the transverse fold in the garment, and means integral with said sheet of material for securing the ends of said sheet to said garment.

5. A protector for folded garments comprising a sheet of material adapted to be placed over a fold in the garment, and spring fingers struck out from said sheet of material and adapted to engage said garment.

6. A protector for folded garments comprising a sheet of material adapted to be placed over a fold in the garment, and means permitting said garment to be viewed through said protector at the fold.

7. A protector for folded garments comprising a sheet of material adapted to be placed over a fold in the garment, and a sight opening formed in said sheet permitting said garment to be viewed therethrough at the point of the fold.

In testimony whereof I have signed my name to this specification.

HARRY C. SMITH.