E. C. NEWTON.

AUTOMATIC SPARK ADVANCER.

APPLICATION FILED DEC. 22, 1915.

1,257,630.

Patented Feb. 26, 1918

2 SHEETS—SHEET 1.

Fig. 1.

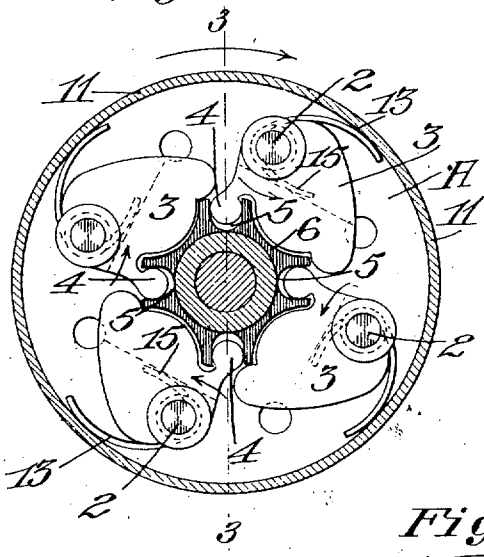


Fig. 3.

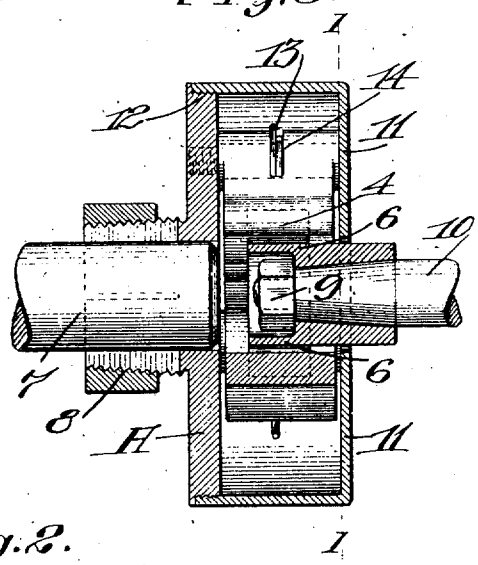


Fig. 2.

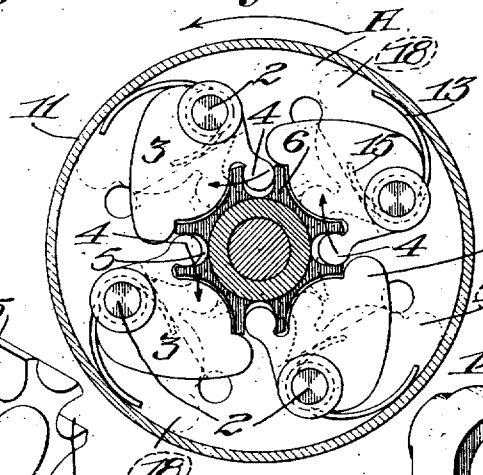


Fig. 4.

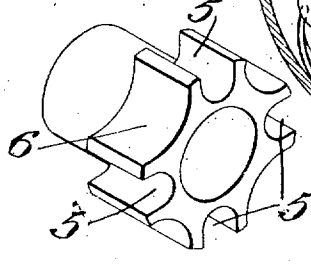


Fig. 5

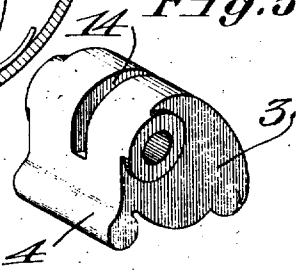


WITNESSES:

Charles Ackles

Thos Eastberg

INVENTOR

Edward C. Newton.

BY Strong & Townsend

ATTORNEYS

E. C. NEWTON.

AUTOMATIC SPARK ADVANCER.

APPLICATION FILED DEC. 22, 1915.

1,257,630.

Patented Feb. 26, 1918.

2 SHEETS—SHEET 2.

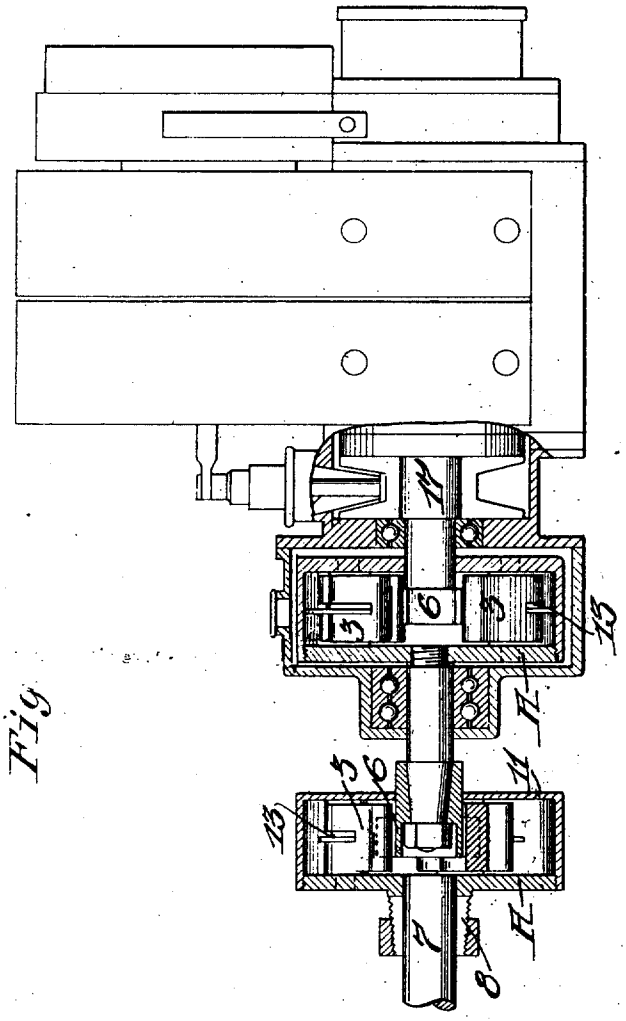

Fig

WITNESSES:

Charles Ricklis

Thos. Eastberg

INVENTOR

Edward C. Newton.

BY Strong & Townsend

ATTORNEYS

# UNITED STATES PATENT OFFICE.

EDWARD C. NEWTON, OF MARYSVILLE, CALIFORNIA.

## AUTOMATIC SPARK-ADVANCER.

1,257,630. Specification of Letters Patent. Patented Feb. 26, 1918.

Application filed December 22, 1915. Serial No. 68,174.

*To all whom it may concern:*

Be it known that I, EDWARD C. NEWTON, a citizen of the United States, residing at Marysville, in the county of Yuba and State of California, have invented new and useful Improvements in Automatic Spark-Advancers, of which the following is a specification.

This invention relates to an automatic spark advancer, particularly adapted for use in connection with ignition systems on internal combustion engines.

The object of the present invention is to provide a simple, compact, automatically actuated advancing device which is so constructed that it may be applied to or connected with the spark controlling mechanism of practically any internal combustion engine, in such a manner that the spark will be automatically advanced or retarded according to the speed of the engine. Further objects will hereinafter appear.

The invention consists of the construction and combination of parts, as hereinafter more fully described and claimed, having reference to the accompanying drawings, in which—

Figure 1 is an end view and section taken on line 1—1, Fig. 3, showing the driven shaft in a retarded position and showing the weights in a position to be driven clockwise.

Fig. 2 is a similar view showing the weights reversed in a position permitting an anti-clock-wise drive.

Fig. 3 is a cross section on line 3—3, Fig. 1.

Fig. 4 is a perspective view of the star wheel.

Fig. 5 is a perspective view of one of the weights.

Fig. 6 is a side elevation partly in section of a standard Bosch magneto, showing the application of the invention.

Referring to the drawings in detail, A indicates a disk in which is secured a plurality of stud bolts 2. Pivotally mounted on the bolts, of which there are four in the present instance, are weight members 3. Each weight member is provided with an arm 4 which is adapted to extend into a groove 5 formed in a star wheel 6. The disk A is secured upon a driving shaft 7 in any suitable manner, but preferably by means of the clamp coupling, indicated at 8, and the star wheel 6 is secured by means of a nut 9 on one end of a driven shaft 10. Forming a closure for the weights and the star wheel interposed between same is a casing cover 11. This is adapted to be secured to the disk A by being screwed thereon, as at 12 or may be secured in any other manner. The weights proper normally assume the position shown by full lines in Figs. 1 and 2, but are adapted to be thrown outwardly against the casing or cover section 11 by centrifugal action when the device as a whole is revolved at a comparatively high speed. The outward movement of the weights caused by centrifugal action is, however, restricted by coil-springs 13, so that a gradual movement of the weights takes place as the speed increases.

The weights proper are centrally slotted, as at 14 to receive the coil-springs 13. The outer ends of which engage with the interior surface of the cover 11, while the inner ends 15 engage with the bottom of the grooves 14.

The device as a whole is particularly constructed and adapted for use in connection with the ignition systems, such as are used on internal combustion engines. One application of the device, is shown in Fig. 6. A standard Bosch magneto is here shown directly connected with the pump or cam shaft 7 of the engine. Two automatic advancers are here shown as interposed between the driving shaft and the magneto shaft 17, the object of which will hereinafter be described.

In operation with the automatic advancer interposed between the driving shaft and the armature shaft, it will be seen that as the speed increases, an advance of the driven shaft with relation to the driving shaft takes place; the centrifugal action caused by the revolution of the device as a whole causes the weights to swing about their pivot pins 2 in an outward direction. This movement causes the arms 4 to move in the direction of the arrows, (see Fig. 2) until the extreme movement is reached, such as shown by dotted lines at 18. Engagement of the arms 4 with the radially disposed slots 5 in the star wheel causes this with connected shaft 10, which in this instance is the armature shaft to advance ahead of the driving shaft; the amount of the advance depending entirely upon the speed of the engine and

the tension of the coil-springs. The position of the interrupter shaft and the timing disk is always fixed with relation to the armature shaft and will, therefore, advance in unison with same when the automatic advancer moves the armature shaft ahead of the driving shaft. The spark is thus automatically advanced and retarded with relation to the crank shaft and piston in the engine, and a perfect control is obtained without any skill or attention on the part of the operator. The two advancers shown in Fig. 6 are provided for the purpose of permitting the armature shaft to advance a considerable distance ahead of the driver. This is of considerable importance when using high speed engines, as it is often necessary to advance beyond sixty degrees. The weights in one advancer are in this instance lighter than in the other, thus permitting one to advance its limit before the other operates. This view also shows the possibility of building the advancer in such a manner that it may be inclosed in the magneto housing, thus forming a direct connection and complete unit.

The application of an automatic advancer of the character described in connection with a spark control mechanism is a great advantage in many ways.

First:—An automatic advance of the spark which is in accordance with the speed of the engine, thus insuring a high point of efficiency which cannot possibly be obtained by a manual advance of the spark.

Second:—It reduces all danger of a kick-back in cranking a motor, as the automatic advancer always retards the spark when the engine stops, so that it is set on dead center when the engine is again started. Back-fire is thus impossible.

Third:—It insures a much higher engine efficiency and saving of fuel, as a hotter spark and more perfect combustion is obtained.

Fourth:—It forms an ideal coupling between the driving and driven parts which not only permits flexibility between the two, but also operates with an equal efficiency whether the shafts are in direct alinement or not.

The device constructed as here shown is simple and compact in construction, it permits a much greater advance of the spark than any other device heretofore constructed and is automatic in operation and so simple that no adjustment or attention is required at any time.

The device as a whole is easily assembled and taken apart, as it is only necessary to remove the casing 13 to disassemble the device as a whole.

While the device as shown and described as an advancer for the sparking mechanism on internal combustion engines, it is obvious that it may be used for any other purpose and that I do not wish to limit its application.

By referring to Figs. 1 and 2, it will be seen that plate A is provided with eight threaded openings. This is for the purpose of permitting the pivot pins to be changed to one set of openings or another, in this manner permitting the position of the weights to be reversed to permit clock-wise or anti-clock-wise movement of the advancer.

The materials and finish of the several parts of the device may otherwise be such as the judgment and experience of the manufacturer may dictate.

I wish it understood that various changes in form, proportions and minor details of construction may be resorted to within the scope of the appended claims and that I do not wish to limit myself to the specific design and construction here shown.

Having thus described my invention, what I claim and desire to secure by Letters Patent is—

1. In combination, a pair of alined shafts, and means coupling the shafts comprising a member fixed on one shaft and extending laterally therefrom, a governor weight pivotally carried by the other shaft and having pivotal connection with said member, the latter having a seat for the weight in normal position, and means tending to return and hold the weight to its seat on said member.

2. In combination, a pair of alined shafts, and means coupling the shafts comprising a casing fixed on one shaft, a member fixed on the other shaft and extending laterally therefrom within the casing, a governor weight having a central groove and a transverse opening, a pin passing through the opening of the weight and pivotally securing the latter to the casing, said weight having pivotal connection with said laterally extending member, and a spring arranged in the groove of the weight and coiled about the pin with one terminal bearing outwardly against the casing for urging the weight to normal position.

3. The combination with a driving shaft, of a disk secured thereon, a driven shaft, a wheel secured on said shaft, a plurality of reversible governor weights, means pivotally mounting the weights in their normal and reversed positions on the disk, an arm on each governor weight forming a pivotal driving connection between each weight and the wheel in both positions of said weight, and a spring for returning each governor weight against the wheel.

4. In an apparatus of the character described, a power shaft and a magneto armature shaft axially in line, a star wheel fixed to the magneto shaft and having alternate

segmental channels and seats formed in its peripheral edge, weights pivoted upon studs carried by the driving shaft and exterior to the star wheel, said weights normally engaging in their seats on the wheel and having lugs engaging the star wheel channels and acting centrifugally to cause the armature shaft to advance with the revolution of the driving shaft, and springs pressing upon the weights to return them to their seats and the armature shaft to normal relation with the power shaft.

5. The combination with a driving shaft, an alined pair of driven shafts, coupling means between the driven shafts, and other coupling means between the driving shaft and a driven shaft, each coupling means being operable through centrifugal action for rotating one shaft relative to the other, and one coupling means being more sensitive to centrifugal force than the other coupling means whereby the more sensitive means will operate preliminary to the less sensitive means.

6. The combination with a driving shaft, an alined pair of driven shafts, coupling means between the driven shafts, and other coupling means between the driving shaft and a driven shaft, each coupling means being acted upon by centrifugal force to relatively rotate the connected shafts, and one of said coupling means requiring a higher speed of rotation than the other to effect relative rotation between its connected shafts.

In testimony whereof I have hereunto set my hand in the presence of two subscribing witnesses.

EDWARD C. NEWTON.

Witnesses:
JOHN H. HERRING,
W. W. HEALEY.