April 23, 1946. C. I. HALL 2,399,020

THERMOMOTIVE DEVICE

Filed Jan. 30, 1943

Fig. 4

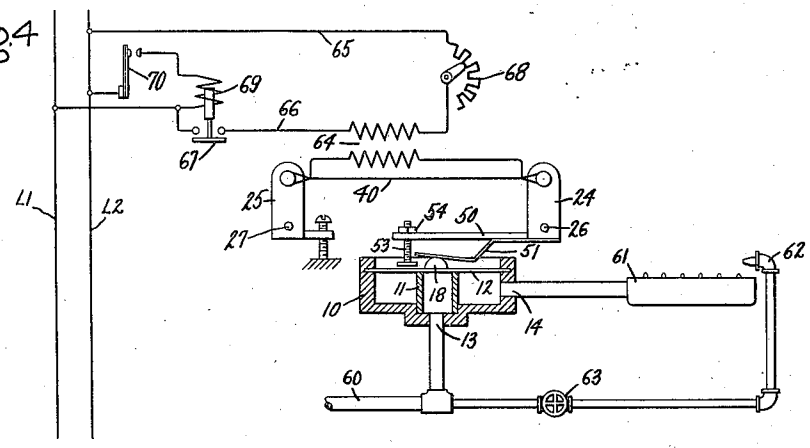

Fig. 1

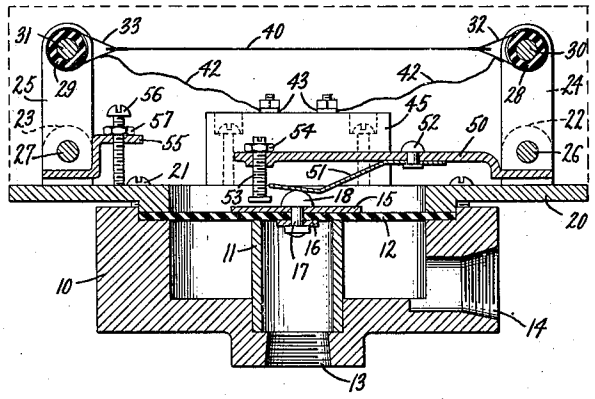

Fig. 2

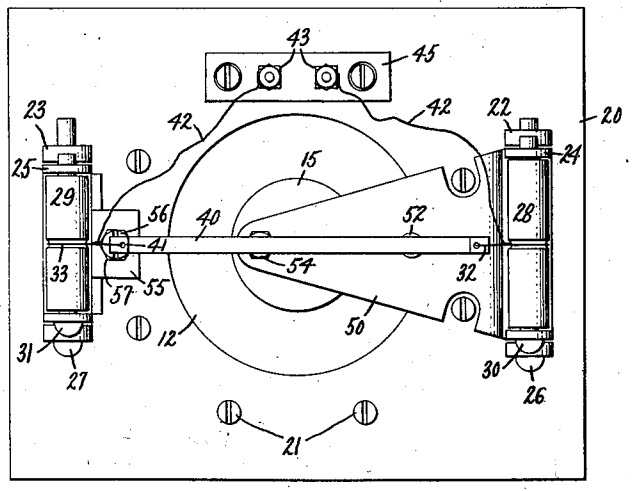

Fig. 3

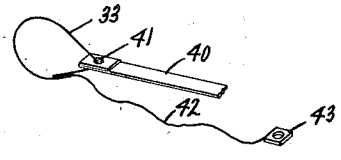

Inventor:
Chester I. Hall,
by Harry E. Dunham
His Attorney.

Patented Apr. 23, 1946 2,399,020

UNITED STATES PATENT OFFICE

2,399,020

THERMOMOTIVE DEVICE

Chester I. Hall, Vischer's Ferry, N. Y., assignor to General Electric Company, a corporation of New York

Application January 30, 1943, Serial No. 474,210

11 Claims. (Cl. 137—139)

The invention relates to thermomotive devices, particularly valves operated by an electrically heated thermomotive element, and the principal object is to provide an improved form of adjustable range thermomotive operating mechanism employing an electrically heated extensible element for operating valves or other devices.

Various forms of electrically heated thermomotive operating mechanisms have been proposed as such a mechanism can be made absolutely quiet and therefore is better adapted for alternating current energization than the conventional solenoid. Also, the force developed by an electrically heated thermomotive operating element can be made relatively large compared to a solenoid of equal electrical rating so as to insure greater reliability. Furthermore, a thermomotive mechanism inherently can open and close a valve or operate other devices more slowly than a solenoid which is of material advantage in some service as, for example, in avoiding water hammer or in gradually controlling gas fired heating equipment. In addition, a thermomotive mechanism may be made to operate equally well in any position.

However, since solenoids still remain predominant in common use for operating valves and other devices, the various forms of electrically heated thermomotive operating mechanisms heretofore proposed still leave something to be desired.

One of the objects of the present invention is to provide an improved thermomotive operating mechanism having cooperating range adjusting means connected with the opposite ends of a relatively quick heating and cooling current conducting tension wire or strip for jointly controlling the heating and cooling time delays involved in the operation of the valve or other control device operated thereby.

A more specific object is to provide an improved diaphragm valve thermomotive operating mechanism that enables an electrically heated thermomotive valve operating wire or strip to have a relatively wide heating and cooling range so as to reduce the active length thereof and to be adjustably mounted under adjustable tension at ambient temperature substantially parallel with and adjacent to the valve diaphragm operated thereby. This not only enables a more compact and practical valve structure to be obtained with the operating parts thereof readily accessible for adjustment, repair, or replacement, but also overcomes many of the usual difficulties that are encountered in extensibly mounting, housing, heating, cooling, and operatively connecting a thermomotive valve operating element.

A further object is to enable the pressure of the controlled fluid on the diaphragm valve to be utilized to open the valve with or without an initial snap action when the thermomotive element is heated according to the adjustment of the thermomotive operating mechanism while the increased tension produced upon cooling of the thermomotive wire or strip correspondingly serves to close the diaphragm valve with or without a final snap action.

A special object is to provide the improved adjustable range thermomotive operating mechanism with a variable lost motion spring having a preadjustable strain release stop for regulating the operating temperature range of an electrically heated thermomotive wire or strip so as thereby to control the operating time.

The preadjustable variable lost motion range adjusting spring strain release stop enables the improved mechanism to effect the operating movements of the valve or other device operated thereby while the temperature of the thermomotive operating wire or strip is varying over a preadjustable temperature range well above the ambient temperature. In this way the heating and cooling time required upon energization and deenergization of the thermomotive element to effect the corresponding operating movements of the valve or other device may be relatively varied within desired limits without, however, imposing any excessive tension strains on the thermomotive operating element when it cools down to the ambient temperature or is heated to its maximum temperature.

Further objects and advantages of the invention will appear in the following description of the accompanying drawing in which Fig. 1 is a sectional view of a thermomotive diaphragm valve embodying the invention in a preferred form; Fig. 2 is a top view of the thermomotive valve structure shown in Fig. 1; Fig. 3 is an enlarged view showing more clearly the mounting and energizing connections for the thermomotive extensible wire or strip; and Fig. 4 is a schematic diagram showing the improved valve connected to control the operation of a gas burner under thermostatic control.

As shown in Fig. 1, the diaphragm valve body 10 is provided with a cylindrical valve seat 11 for cooperating with the flexible valve diaphragm 12 to control the flow of fluid from the inlet opening 13 to the outlet opening 14. The flexible diaphragm 12 carries the stiffening plates 15 and 16

on the opposite sides thereof for mounting the operating pin 17 having the rounded head 18 provided on the upper side thereof. The enlarged plate 15 serves to insure a tight sealing engagement of the diaphragm 12 with the cylindrical seat 11 when the valve is closed, as shown. The flexible diaphragm 12 is removably mounted with its periphery sealed in a suitable circular recess formed in the valve body 10 by means of the clamping plate 20 which is secured to the body 10 by the holding-down screws 21.

The removable clamping plate 20 is provided with a pair of mounting yokes 22 and 23 for pivotally supporting the movable adjusting brackets 24 and 25 on the pins 26 and 27 so that these brackets can adjustably carry the electrical insulating tubes 28 and 29 on the pins 30 and 31. These insulators are provided with suitable central grooves for receiving the mounting wire loops 32 and 33 that are connected to the ends of the thermomotive tension element 40 that operates the valve. In order to accelerate the heating and cooling thereof, the thermomotive tension element 40 is in the form of a very thin flat wire or strip with the ends thereof folded over and brazed for mechanical reinforcement, as indicated more clearly in Fig. 3. The thermomotive strip 40 may be formed of nichrome or other suitable high resistance current conducting material that has a high tensile strength and a substantial coefficient of expansion and can successfully withstand operation at relatively high temperatures for extended periods without deterioration.

As shown in Fig. 3, the mounting wire loop 33 extends freely through the hole 41 formed in the folded over end of the thermomotive element 40 with the ends of the loop 33 joined together along with the end of the flexible lead 42 for the circuit connection terminal 43, preferably by silver brazing. The mounting of the other end of the thermomotive element 40 is accomplished in the same way. Thus the two terminals 43 for conducting the heating current to the thermomotive element 40 may be mounted on a suitably insulated terminal block 45 with sufficient flexibility in the leads 42 to permit relatively free pivotal movement of both of the adjusting brackets 24 and 25.

The motion transmitting connections for the thermomotive element 40 include a pivoted bracket 24 and the cooperating variable lost motion spring 51. The pivoted bracket 24 is provided with an operating arm 50 extending substantially parallel with and between the strip 40 and the diaphragm 12. The variable lost motion range adjusting spring 51 is secured to arm 50 by the rivet 52 so that the free end thereof extends into biasing engagement with the rounded head 18 of the diaphragm valve operating pin 17. The arm 50 also carries the adjustable strain release stop screw 53 for engaging with the free end of the biasing spring 51 so as to stop the release of the strain of this spring and thereby control the valve operating characteristics, particularly the operating time for the diaphragm valve, as explained more in detail hereafter. When the desired valve operating characteristic is obtained, the adjustable strain release stop screw 53 is locked in position by the nut 54.

The pivoted bracket 25 is provided with the arm 55 so that its angular position may be adjusted by means of the adjusting screw 56 and the lock nut 57 to place the thermomotive element 40 under a varying amount of tension at the normal ambient temperature to flex the biasing spring 51 a variable distance away from the strain release stop screw 53 when the diaphragm valve is in the closed position, as shown. In this way the self-heating, current conducting extensible thermomotive valve operating element 40 is adjustably mounted under adjustable tension substantially parallel with and adjacent to the diaphragm 12 of the valve. Thus a suitably ventilated removable cover, indicated by the dotted lines 58, may be provided for engaging with the top plate 20 so as fully to enclose the thermomotive operating mechanism of the valve while providing ready access for adjustment, repair or replacement of the parts.

As shown in Fig. 4, the diaphragm valve 10 is connected to control the flow of gas from the supply pipe 60 to the gas burner 61. The burner 61 is provided with the usual pilot igniter 62 supplied from the pipe 60 through the pilot regulating valve 63. The thermomotive operating element 40 is connected to be supplied with heating current from the secondary of a transformer 64. The primary of the transformer 64 is energized from the supply lines L1, L2 through the conductors 65 and 66 under the control of the relay 67 and the adjustable current regulating resistor 68. The operating winding 69 of the relay in turn is energized from the supply lines under the control of the thermostat 70 to control the operation of the valve 10 in the following manner.

Operation

When the thermostat 70 closes its contacts, the winding 69 is energized to close the relay contact 67 and thereby energize the primary of transformer 64. The transformer 64 supplies a relatively large current at low voltage to effect a rapid heating of the thermomotive valve operating element 40, the amount of heating current being controlled by the adjustment of resistor 68. As a result, both the temperature and the length of the element 40 may be increased at a relatively rapid initial rate. As the length of element 40 increases, the strain of the biasing spring 51 rotates the arm 50 and the bracket 24 in a clockwise direction about the pivot pin 26 while still maintaining the diaphragm valve 12 closed due to the lost motion provided by the unflexing of spring 51. Thus for a predetermined time after the thermomotive element 40 is energized, the arm 50 will be rotating a predetermined amount dependent jointly upon the adjustments of the strain release stop 53 and of the tension adjusting screw 56 before bringing the adjustable stop screw 53 into engagement with the end of the spring 51. Thereupon the free end of the spring 51 will move as a unit with the arm 50 to permit the gas pressure exerted on the diaphragm 12 over the limited area of the valve seat 11 to effect an initial opening of the valve.

In case the joint adjustments of screw 56 to control the initial tension of the thermomotive element 40 at ambient temperature, and of the strain release stop screw 53 to control the lost motion of the thermomotive mechanism are such that the increased force exerted by the gas pressure over the entire area of the diaphragm 12 after the initial opening of the valve is insufficient to flex the end of the spring 51 away from the adjustable stop 53, then the continued opening movement of the valve will be proportional to the further increase in length of the thermomotive element 40 which may be varied by adjusting resistor 68 to vary the heating current supplied to the element. Thus the opening movement of

the diaphragm valve 12 will gradually continue at a progressively decreasing rate until the thermomotive element 40 has been heated to its maximum temperature above the ambient at which the heat losses from the thin current conducting strip will equalize with the heat electrically generated therein.

In accordance with the present invention, the joint control of the lost motion by the strain release stop screw 53 and the tension adjusting screw 56 enables the temperature of the thermomotive element 40 to be increased a predetermined amount above the ambient during an initial heating interval before the initial opening of the valve is effected and thereby insures that the valve operating temperature range of the thermomotive element is well above the ambient. As a result, the valve is opened gradually during the subsequent heating interval required for the thermomotive element to reach its maximum temperature. Thus, when the thermostat 70 opens its contacts to drop out the relay 67 and thereby deenergize the thermomotive element 40, the cooling of the thermomotive element 40 from its maximum temperature will occur at a relatively rapid initial rate which progressively decreases as the ambient is approached. The resulting relatively rapid decrease in the length of thermomotive element 40 will effect the closing movement of the diaphragm valve 12 at a correspondingly rapid rate since the final closing of the valve will be effected while the temperature of the thermomotive element 40 is still well above the ambient. In this way the valve closing time may, if desired, be made relatively short.

By suitably adjusting the stop screw 53 and adjusting screw 56, the total time required after closure and opening of the contacts of thermostat 70 for correspondingly opening and closing the valve 12 may be substantially equalized or, if desired, a relative variation of the valve opening and closing time may be obtained. Thus, adjusting to increase the initial tension of element 40 or to increase the lost motion of the stop screw 53 so as to increase the rise in temperature of the thermomotive element 40 above ambient required to initiate opening of the valve will serve to decrease the valve closing time relative to the valve opening time, while oppositely adjusting to decrease the temperature rise of the thermomotive element 40 above ambient required to initiate opening of the valve will accomplish the opposite results. Likewise, if desired, the joint adjustments of the lost motion stop screw 53 and the tension adjusting screw 56 may be made for the purpose of varying the amount of opening of valve 12 obtained when the maximum rise in temperature of element 40 occurs. Thus by adjusting screw 56 to increase the initial tension of element 40 and at the same time adjusting screw 53 to increase the lost motion, then the total amount of opening of valve 12 when the maximum rise in temperature of element 40 occurs will be decreased while the opposite adjustments produce the opposite results. Also by adjusting the resistor 68 to vary the maximum rise in temperature of element 40, the amount of travel of the valve 12 may be varied up to the maximum operating limit of the diaphragm itself.

Furthermore, in case it should be desired to obtain an initial snap action in the opening of the valve and a final snap action in the closure thereof, adjustment of the tension of spring 51 by the strain release stop screw 53 and the tension adjusting screw 56 may be made so that the gas pressure exerted over the total area of the diaphragm 12 upon the initial opening of the valve will become sufficient to flex the end of the spring 51 away from the stop 53. In this way, a limited snap action of the diaphragm 12 will be effected upon each initial opening of the valve. Similarly with such adjustment when the valve is almost closed, the resulting reduction in gas pressure over the total area of the diaphragm 12 will enable the strain in the flexed spring 51 to predominate and thereby effect a limited snap action in the final closing of the valve.

Thus the improved thermomotive operating mechanism of the present invention enables various combinations of selective adjustments to be made to meet many widely varying heating and cooling time as well as other service requirements in valve operating or other control service. Furthermore, all the operating parts are readily accessible for adjustment, repair, or replacement since in the preferred form illustrated the removable valve diaphragm clamping plate 20 carries the entire thermomotive operating mechanism.

What I claim as new and desire to secure by Letters Patent of the United States is:

1. In combination, a diaphragm valve subject to fluid pressure for biasing said valve open and having a removable diaphragm clamping plate provided with a pair of pivoted brackets, each having an insulator carried thereby, a self heating current conducting thermomotive tension strip having mounting means at the ends thereof for engaging said insulators, a valve operating arm extending from one of said brackets and provided with a biasing spring for operatively engaging said diaphragm valve to effect closure thereof and having an adjustable stop carried thereby for engaging said spring to control the release of the strain thereof in opening said valve and means for adjusting the other of said brackets to place said strip under tension sufficient to move said spring away from said stop with said strip at ambient temperature to inversely vary the heating interval of said strip required before opening said valve and the cooling interval of said strip required for closing said valve.

2. In combination, a valve biased open, a thermomotive operating mechanism for closing said valve including a self-heating current conducting thermomotive tension strip having adjustable mounting means at one end thereof, and a valve operating arm operated by the other end of said strip and provided with a biasing spring for operatively engaging said valve to effect closure thereof and an adjustable strain release stop for said spring to control the valve closing temperature of said strip and thereby inversely varying the cooling interval of said strip required for closing said valve and the heating interval of said strip required before opening said valve.

3. In combination, a movable member having a predetermined limit of motion in one direction and biasing means for effecting movement thereof in the opposite direction, a relatively movable member having a spring for moving said first member in said one direction and provided with an adjustable stop movable as a unit with said relatively movable member for controlling the release of the strain of said spring, and operating means including an electrically heated thermomotive element for moving said relatively movable member to operate said first member upon variation of the temperature of said element within a range variable upon the adjustment of said stop to relatively vary the heating

and cooling time delay of said element in said range.

4. In combination, a movable control element having a motion limiting position, means for biasing said element to move from said limiting position to other positions, an operating member having a relatively movable spring for predominating over said biasing means and provided with an adjustable strain release stop, and an electrically heated thermomotive tension element having a tension adjusting mounting means at one end thereof and having the other end thereof connected with said operating member for moving said spring and said stop to return said control element to said limiting position at the end of an interval of cooling of said thermomotive element predetermined jointly by the adjustment of said strain release stop and the adjustment of said tension adjusting mounting means.

5. In combination, a movable control element having a motion limiting position, means for biasing said element to move from said limiting position to other positions, means including a movable spring for opposing said biasing means and provided with an adjustable strain release stop movable as a unit with said spring, and an electrically heated thermomotive tension element for moving said spring and said stop to return said control element to said limiting position at the end of an interval of cooling of said thermomotive element variable by the adjustment of said stop.

6. In combination, a movable control element having a motion limiting position, means for biasing said element to move from said limiting position to a variable position, a movable spring for opposing said biasing means and provided with an adjustable strain release stop movable as a unit with said spring, and an electrically heated thermomotive tension element for moving said spring and said stop to reversely operate said control element between said positions in heating and cooling intervals relatively variable by the adjustment of said strain release stop.

7. In combination, a movable control element, means for biasing said element to move from a predetermined control position, and means including a current conducting thermomotive tension strip having a movable spring strained thereby for holding said element in said position and provided with an adjustable strain release stop for effecting movement of said control element from said position after the electrical heating of said strip for an interval variable by the adjustment of said strain release stop.

8. A variable time delay load operating mechanism having, in combination, an electrically heated thermomotive element, a movable load member having a predetermined limit of motion and provided with means for biasing said member to move therefrom, means including a spring controlled by said element for moving said member to said limit at the end of an initial interval of cooling of said element and maintaining said member at said limit during the subsequent cooling interval of said element, and said spring having an adjustable resiliency stop for inversely varying said intervals.

9. In combination, a thermomotive operating element having heating means, motion transmitting connections for said element including a lost motion spring, and means for varying the lost motion of said spring including an adjustable stop for variably limiting the unflexing of said spring.

10. In combination, a thermomotive element having heating means, motion transmitting connections for said element including a lost motion spring for unflexing to provide lost motion in the initial part of the heating range of said element and means for varying said lost motion part of said range including an adjustable stop carried by one of said connections for variably limiting the unflexing of said spring.

11. In combination, a thermomotive operating element, means for varying the temperature of said element at progressively decreasing rates during both heating and cooling, a motion transmitting member connected with said element and having a motion transmitting spring movable to a predetermined limit of motion transmission as a unit with said member upon cooling of said element and flexible relative to said member to provide lost motion after said limit is reached, means for adjusting said element to vary the flexure of said spring relative to said member when said element is cool, and means including an adjustable stop carried by said member for variably limiting the unflexing of said spring to inversely vary the rates of heating and cooling motion of said element transmitted by said spring adjacent said limit.

CHESTER I. HALL.