United States Patent [19]

Moen

[11] **3,826,429**

[45] **July 30, 1974**

[54] **ADJUSTABLE SHOWER HEAD**

[76] Inventor: **Alfred M. Moen,** 25 Lakeview Dr., Grafton, Ohio 44044

[22] Filed: **Apr. 23, 1973**

[21] Appl. No.: **353,734**

[52] **U.S. Cl.** **239/460**
[51] **Int. Cl.** **B05b 1/32**
[58] **Field of Search** 239/456, 457, 458, 459, 239/460

[56] **References Cited**

UNITED STATES PATENTS

1,863,548	6/1932	Bloch	239/460
2,890,838	6/1959	Jannsen	239/534
3,365,138	1/1968	Green	239/534
3,384,307	5/1968	Moen	239/460
3,547,353	12/1970	Pecka	239/460
3,617,002	11/1971	Symmons	239/460

Primary Examiner—Lloyd L. King
Attorney, Agent, or Firm—Kinzer, Plyer, Dorn & McEachran

[57] **ABSTRACT**

An adjustable shower head in which a spray forming member having sealing properties is recessed into a groove in the body member of the shower head.

10 Claims, 5 Drawing Figures

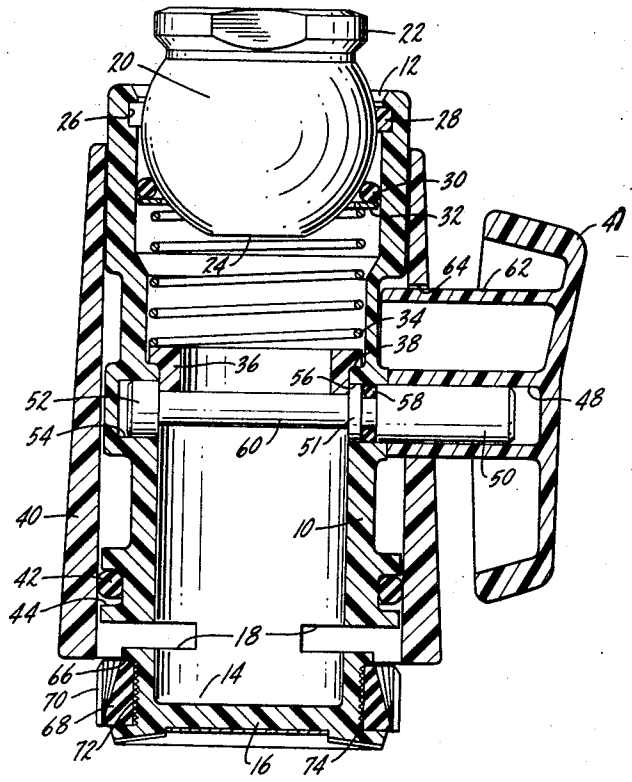

fig.1.

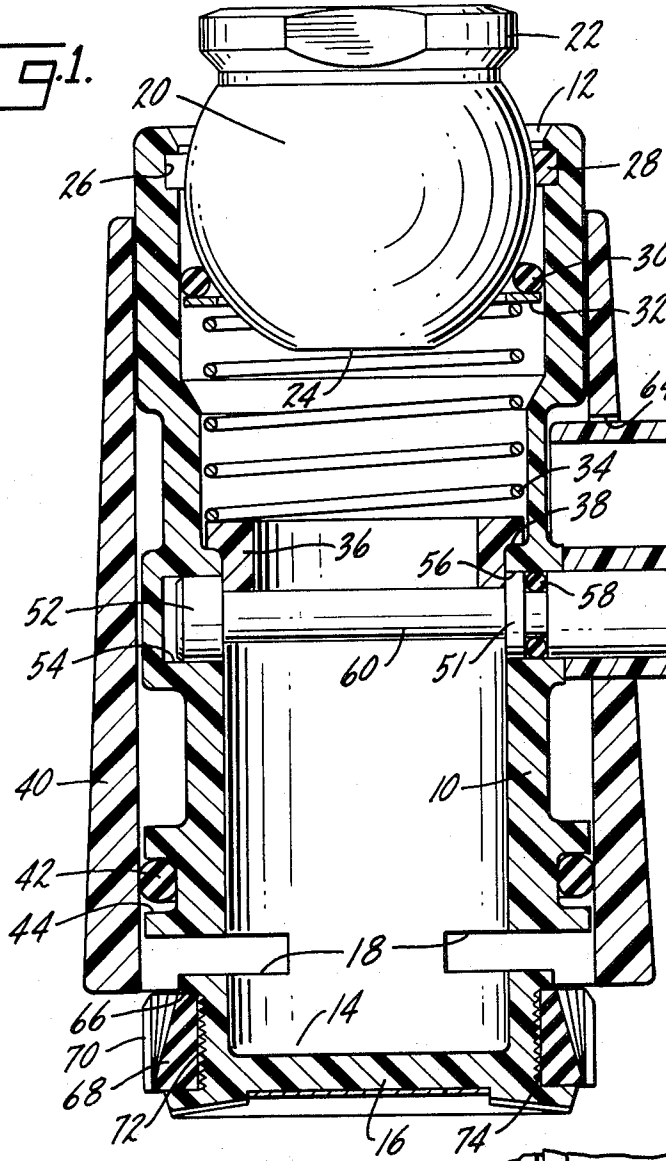

fig.4.

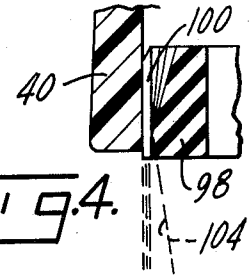

fig.5.

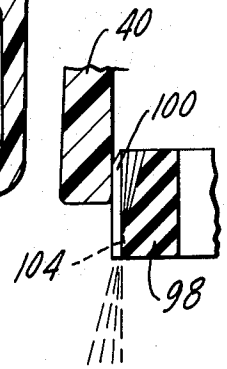

fig.2.

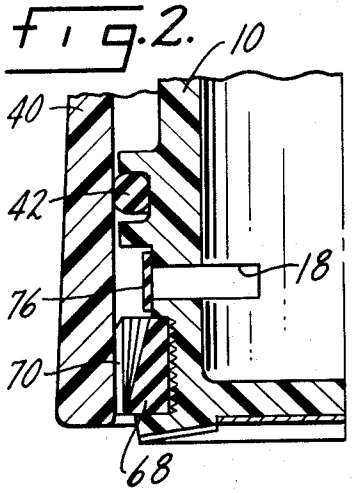

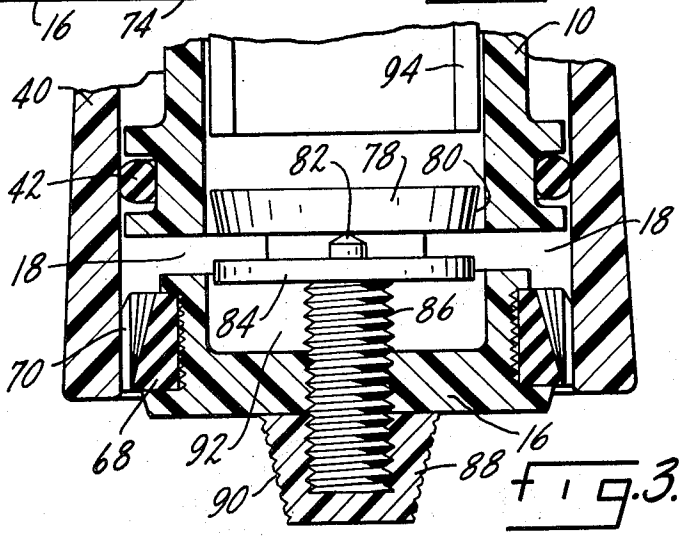

fig.3.

ADJUSTABLE SHOWER HEAD

SUMMARY OF THE INVENTION

The present invention relates to shower heads and in particular to improvements in an adjustable shower head in which the spray forming member is a separate replaceable part formed of a material having sealing properties.

One purpose of the present invention is a shower head of the type described which eliminates at least one seal utilized in former shower heads of this general type.

Another purpose is an adjustable shower head in which the body is of one-piece molded construction.

Another purpose is an adjustable shower head in which the sealing members pressure balance the movable portions of the shower head.

Another purpose is a shower head of the type described having means to prevent air being drawn inwardly into the shower head during the period that an associated tub spout is discharging water.

Another purpose is an adjustable shower head in which the movable sleeve has a smooth inside surface.

Another purpose is a shower head which is vandal proof.

Other purposes will appear in the ensuing specification, drawings and claims.

BRIEF DESCRIPTION OF THE DRAWINGS

The invention is illustrated diagrammatically in the following drawings wherein:

FIG. 1 is an axial section through a shower head of the type described,

FIG. 2 is a partial axial section showing a modified form of the invention,

FIG. 3 is a similar partial axial section showing yet a further modification of the invention,

FIG. 4 is a partial vertical section illustrating a modified form of spray forming member in one position, and

FIG. 5 is an axial section, similar to FIG. 4, but illustrating the spray forming member of FIG. 4 in a second position.

DESCRIPTION OF THE PREFERRED EMBODIMENT

In FIG. 1 a generally elongated tubular body member is indicated at **10** and may have an upstream end **12** and a downstream end **14** which is closed by an integral web **16.** Adjacent the downstream end **14** are a pair of slots **18** which form discharge openings for the body member **10.**

At the upstream end **12** there is a ball member **20** having an internally threaded tool receiving area **22** for use in connecting the ball member **20** to a conventional water pipe. The ball member **20** has an internal water passage, not shown, which discharges water through a flattened end portion **24** into the interior of the body member **10.**

Near the upstream end **12** of the body member **10** there is a groove **26** within which is seated a split ring or snap ring **28.** The snap ring **28** has an internal diameter slightly less than the major diameter of the spherical shaped ball member **20** so that when the ball member has been positioned within the body member **10** and the snap ring **28** positioned in its groove **26,** the ball member and body member will be fixed together in a manner which will permit relative pivotal movement between the two parts, but prevent disassembly.

A seal member **30** is positioned between the exterior of the ball member **20** and the interior wall of the body member **10** to seal the upstream end of the body member. The seal **30** is held in position by a ring **32** which in turn is biased upwardly against the seal member by a coil spring **34.** The lower end of the coil spring is seated upon a collar **36** which in turn is supported within the body member by means of an internal shoulder **38.** Thus, the collar **36** and the shoulder **38** are fixed in position within the body member and in turn support the spring **34** which places an upward bias on the ring **32** and hence the seal **30.**

Slidably mounted on the exterior of the body member **10** is a sleeve **40** having a generally constant internal diameter and a slightly tapered exterior. A seal ring **42,** positioned within a groove **44** adjacent the discharge openings **18** in the body member, seals the external surface of the body member and the internal surface of the sleeve **40.**

A handle **46** is effective to slidably move the sleeve **40** upon the body member **10.** The handle **46** may have an internal bore **48** receiving a pin **50.** The pin **50** has its left-hand end **52** rotatably mounted within a circular opening **54** in the internal surface of the body member **10,** with a portion **51** of the pin **50** being positioned within a circular opening **56** in the right-hand side of the body member **10.** A seal **58,** recessed into the pin **50,** is effective to prevent water leaking through the opening **56.** The central portion of the pin **50,** indicated at **60,** is positioned within the body member **10** in the path of water flowing from the upstream end to the downstream end. When the handle **46** is rotated, its cam surface **62,** positioned within an opening **64** in the sleeve **40,** is effective to cause reciprocal movement of the sleeve relative to the body member **10.**

At the lower end of the body member **10** is a recess or groove **66** within which is mounted a spray forming member **68.** The spray forming member may have external axially extending grooves **70** which form various angles with the axis of the body member **10** so as to provide a plurality of individual discharge sprays at differing angles. Such grooves are shown in U.S. Pat. No. 3,384,307. The spray forming member **68** is formed of a sealing material such as rubber or one of the common rubber substitutes. Thus, the outside surface of the spray forming member form a seal with the interior surface of the sleeve **40** when the shower head is in the position of FIG. **2.** In this connection, FIG. **1** shows the shower head in a position wherein it is self-cleaning in that the discharge is not a spray but a stream, since the discharge openings **18** are in a position above the grooves **70** in the spray forming member. When the shower head is in the position of FIG. **2,** it will deliver a fine spray with various positions in-between causing differing amounts and angles of the spray discharge.

The internal peripheral surface **72** of groove **66** may have a plurality of small serrations **74** to permit distortion of the sealing material of the spray forming member **68** when the seal is under compression as it would be in the position of FIG. **2.**

It should be noted that the seal ring **42** and the spray forming member **68,** both formed of sealing material, have generally the same outer diameter. Thus, when the shower head is in the position of FIG. **2,** the water pressures applied upwardly upon the seal **42** and down-

wardly upon the spray forming member **68** are equal and opposite, thus balancing the relative positions of the sleeve **40** and the body member and preventing any movement between these two parts due to internally generated water pressures.

In the modification of FIG. **2,** the discharge openings **18** have been masked by a flexible ring **76** which can be expanded, under the influence of water pressure, to permit water to be discharged in the conventional manner through the spray grooves **70.** Of advantage, however, in the use of the ring **76** is that when the shower head is used in combination with a bathtub spout discharge, no air can be drawn inwardly through the discharge openings **18** and down to the spout discharge which, in the past, has created an undesirable noise at the shower head.

In the modification of FIG. **3,** a wobble-plate **78** is positioned within the area of the body member **10** adjacent the discharge openings **18** and has a tapering outer peripheral surface **80.** The wobble member **78** is supported on a pin **82** which may for example be formed of a ceramic material and which is fixed to a plate **84** and a screw **86.** The screw **86** is supported by the web **16** and is adjustable by means of a nut **88** having an outer knurled surface **90.**

In operation of the device in FIG. **3,** the position of the wobble-plate **78** is controlled by the knob **88** and the screw **86.** When the wobble-plate is not to be used, it is withdrawn into the recess **92** formed adjacent the web **16.** When the wobble-plate **78** is in the position of FIG. **3,** water being discharged downwardly through the body member **10** will cause the plate to oscillate about its point support **82,** thus causing a pulsating discharge through the openings **18.**

The position of the wobble-plate **78** may be controlled within the body member **10** by a sleeve **94,** which may be an extension of the collar **36.**

The modification of FIGS. **4** and **5** shows the spray forming member **98** as having a series of grooves **100** similar to the grooves **70.** Whereas the spray forming member **68** shown in FIGS. **1, 2** and **3** had the grooves **70** terminating at the lower end of the spray forming member, the spray forming member **98** of FIGS. **4** and **5** has similar grooves **100** terminating at a point spaced from the bottom of the spray forming member. There may be grooves **104** which extend inward from the point of termination of the grooves **100.** Thus the grooves **104** may have what is termed a negative angle and when the spray forming member is in the position of FIG. **4,** the water discharge will be basically a cylinder, extending in an axial direction, with a few inwardly directed sprays, as shown in FIG. **4,** caused by the grooves **104.** When the sleeve has been moved to the position of FIG. **5,** the groove **104** has no effect and thus the spray discharge will be a series of cones having gradually increasing diameters. The water discharge from the shower head will follow the direction of its last defined path. Thus, the position of the spray forming member relative to the sleeve and the arrangement of the spray grooves can be used to vary the type of spray pattern.

Of importance in the invention is the use of a spray forming member formed of a sealing material. In previous shower heads of this general type, the spray forming member was integral with the body member and a separate seal recessed into the exterior of the sleeve was necessary in order to provide a complete seal between the sleeve and the body member at the point of discharge.

Also of importance is the manner in which the body member is attached to the ball member to provide for pivotal movement between the shower head and the fixed water conduit. In prior art constructions it was necessary to have an internally threaded nut positioned on the body member adjacent the ball member to attach the body to the ball. In the present instance, such a nut is eliminated by the use of a split ring **28** which in turn holds the ball in position within the body member. In this same connection, the spring **34** provides the bias for maintaining a complete seal at the upstream end of the body member **10.**

The body member **10** is a single element which can be conveniently molded of a plastic material. The external sleeve **40,** also a single element, may be plastic or metal, or it may be plastic which is plated with a metal to give it a particular decorative appearance. The sleeve **40** has a smooth internal surface advantageous in forming the sleeve by a molding process.

The use of the expandable ring **76** is particularly advantageous in that it eliminates undesirable noise at the tub spout in a combination shower-tub installation. The ring is sufficiently expandable so that it does not hinder the discharge of water through the shower head, but it does prevent air from being drawn into the shower head when the spout is discharging water.

There are many instances in which a pulsating shower discharge has been found to have certain therapeutic effects. The present invention adds an oscillating plate to the shower head discharge to provide a pulsating effect in the water discharge. The oscillating plate **78** is mounted on a ceramic pin **82** and may have a ceramic plate embedded therein to prevent wear affecting the life of the wobble-plate. The sleeve **94** prevents the plate from turning over within the body member and maintains the wobble-plate in proper disposition for use in providing a pulsating discharge.

In assembly, after pin **50** is inserted in the body **10,** collar **36** is positioned within the body. Next, spring **34** is seated on the collar **36.** The combination of ball **20** and ring **32** and seal **30,** positioned at the downstream end of the ball **20,** is then inserted inside of the body **10** and pushed against the spring **34.** After the ball has been moved inside of the body **10** a sufficient distance, snap ring **28** is positioned within groove **26,** thus securing the body member to the ball **20.** The one-piece body, the one-piece sleeve and the handle are all fixed together and no part of the assembly can be removed unless the entire shower head is removed from its supporting conduit. To this extent the shower head is vandalproof.

The spray former **68,** being formed of a sealing material and therefore distortable, can be removed from the groove **66** for cleaning purposes. Thus, the shower head may be serviced and the spray forming member cleaned or replaced without the shower head ever being removed from the water conduit.

Whereas the preferred form of the invention has been shown and described herein, it should be realized that there may be many modifications, substitutions and alterations thereto.

The embodiments of the invention in which an exclusive property or privilege is claimed are defined as follows:

1. In an adjustable shower head, an elongated generally tubular body member, a ball member at the upstream end of said body member and means for pivotally attaching the body member to the ball member, a sleeve movably mounted on the exterior of said body member, an annular groove adjacent the downstream end of said body member, a separate spray forming member formed of a yielding distortable material removably recessed into said groove, water discharge openings in said body member upstream of said spray forming member, the interior of said sleeve being in sliding contact with the exterior of said spray forming member to vary the discharge therefrom.

2. The structure of claim 1 further characterized by and including a seal member positioned about the exterior of said body member upstream of said water discharge openings and forming a seal between the interior of said sleeve and the exterior of said body member, the exterior diameter of said seal member and said spray forming member being generally the same to pressure balance the relative positions of the sleeve and body member.

3. The structure of claim 1 further characterized in that the means for pivotally attaching the body member to the ball member includes a ring recessed into the interior of the body member adjacent its upstream end, said ring having an interior diameter less than the greatest diameter of the ball member and a spring positioned within said body member and urging said ball member against said ring.

4. The structure of claim 3 further characterized by and including a seal ring positioned between the interior of the body member and the ball member, said spring urging said seal ring into sealing contact with said ball member and body member.

5. The structure of claim 3 further characterized by and including a collar positioned within the body member and forming a seat for said spring.

6. The structure of claim 5 further characterized by and including a shoulder on the interior of said body member, said collar being seated on said shoulder.

7. The structure of claim 1 further characterized by and including an expandable ring surrounding said body member and masking said discharge openings.

8. The structure of claim 1 further characterized in that the spray forming member has a plurality of outwardly extending exterior grooves formed at varying angles to the axis of the shower head to provide differing spray patterns.

9. The structure of claim 8 further characterized in that said outwardly extending exterior grooves terminate in spaced relation to one end of the spray forming member.

10. The structure of claim 9 further characterized by and including inwardly extending grooves in the exterior of said spray forming member beginning in spaced relation to one end of said spray forming member.

* * * * *