No. 757,646. PATENTED APR. 19, 1904.

A. E. BLASHILL.

WIRE FENCE WEAVING MACHINE.

APPLICATION FILED DEC. 26, 1902.

NO MODEL. 2 SHEETS—SHEET 1.

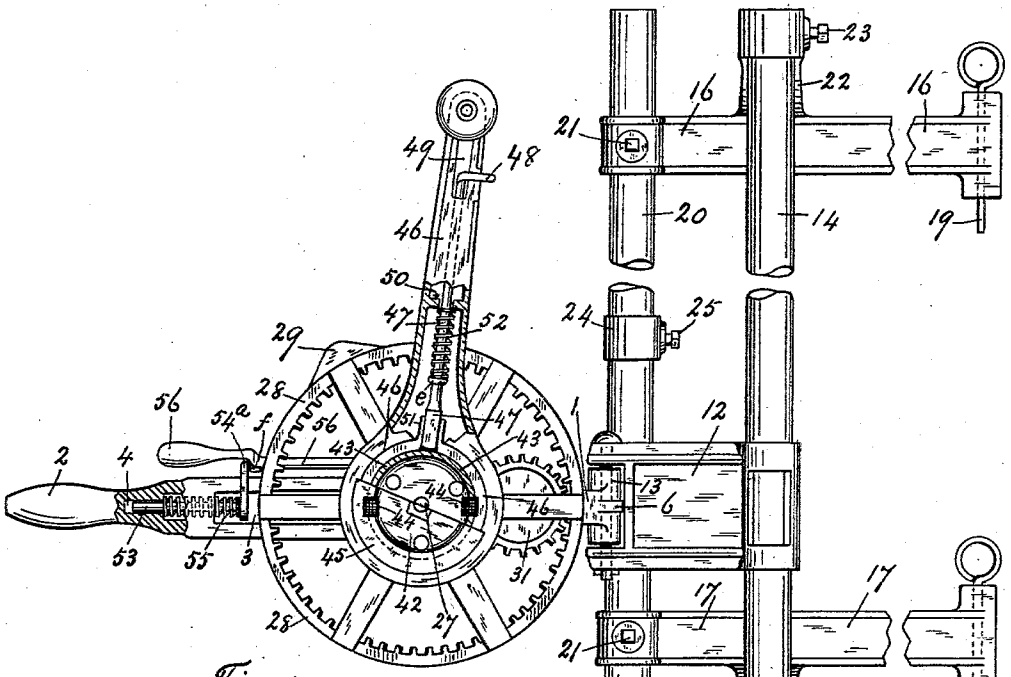

Fig. 1.

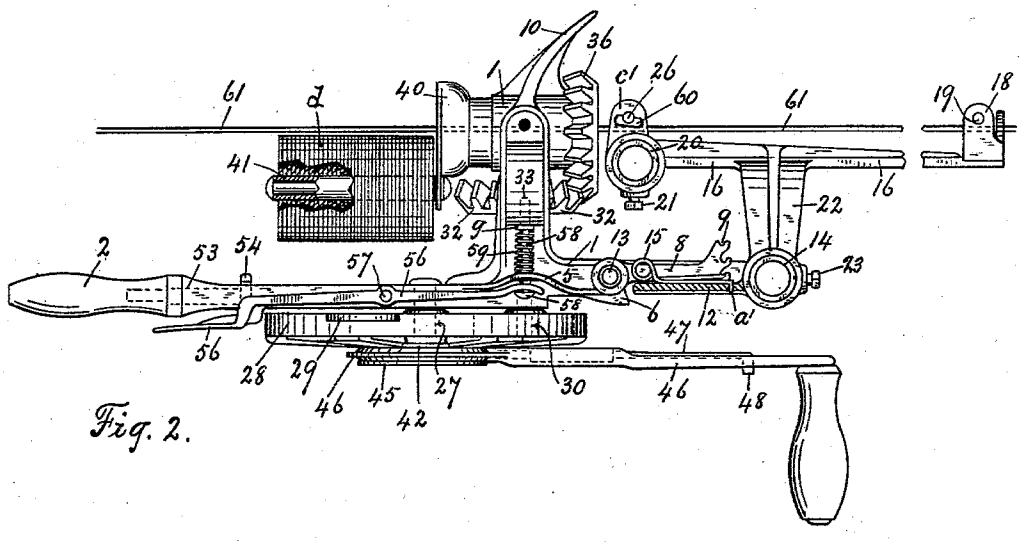

Fig. 2.

Witnesses
J. Edmunds
A. Byrick

Inventor
Arthur E. Blashill
By P. J. Edmunds
Attorney

THE NORRIS PETERS CO., PHOTO-LITHO., WASHINGTON, D. C.

No. 757,646. PATENTED APR. 19, 1904.

A. E. BLASHILL.

WIRE FENCE WEAVING MACHINE.

APPLICATION FILED DEC. 26, 1902.

NO MODEL. 2 SHEETS—SHEET 2.

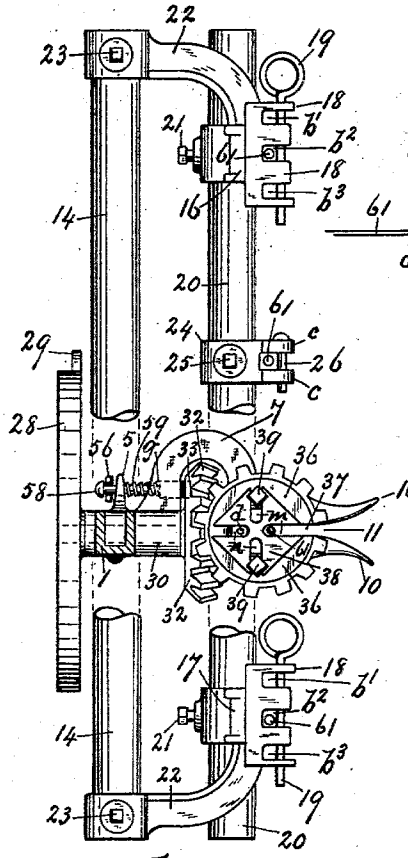

Fig. 3

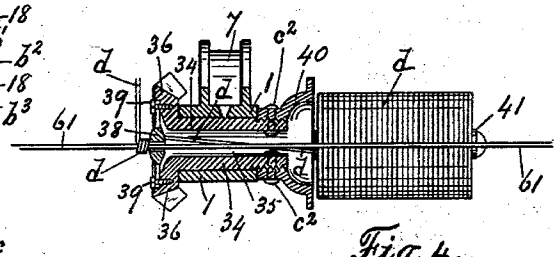

Fig. 4.

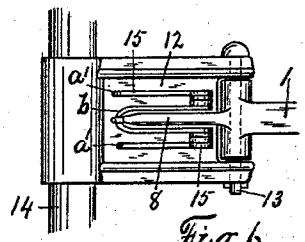

Fig. 6.

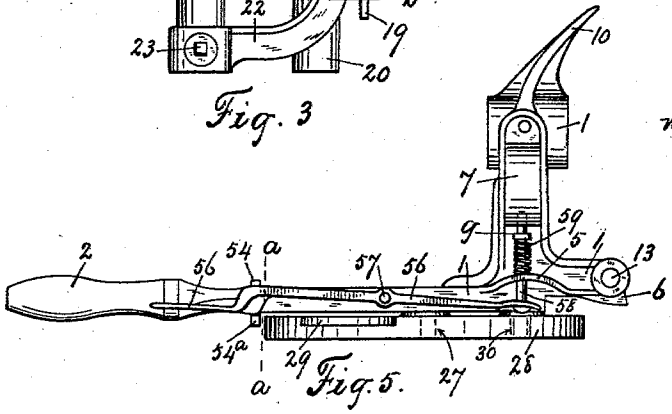

Fig. 5.

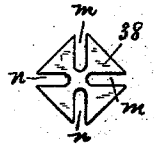

Fig. 7.

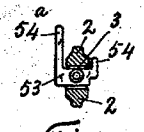

Fig 8

Witnesses
J. Edmunds
A. Byrick

Inventor
Arthur E. Blashill
By P. J. Edmunds
Attorney

THE NORRIS PETERS CO., PHOTO-LITHO., WASHINGTON, D. C.

No. 757,646. Patented April 19, 1904.

UNITED STATES PATENT OFFICE.

ARTHUR E. BLASHILL, OF LONDON, CANADA.

WIRE-FENCE-WEAVING MACHINE.

SPECIFICATION forming part of Letters Patent No. 757,646, dated April 19, 1904.

Application filed December 26, 1902. Serial No. 136,632. (No model.)

To all whom it may concern:

Be it known that I, ARTHUR E. BLASHILL, a subject of the King of Great Britain, and a resident of the city of London, in the county of Middlesex, in the Province of Ontario, Canada, have invented certain new and useful Improvements in Wire-Fence-Weaving Machines, of which the following is a specification.

This invention relates to improvements on portable machines for weaving stay-wires with the horizontal wires of wire fences, and has for its object to provide a machine of greater efficiency and at the same time to simplify the construction and arrangement of parts in such a manner as to render the device less expensive to manufacture. The essential features of these improvements will be hereinafter more fully described and claimed, reference being had to the accompanying drawings, wherein—

Figure 1 is a front view of a wire-fence-weaving machine embodying my invention. In this view the front side of the handle of the machine and ratchet-crank are partly cut away. Fig. 2 is a plan view of same, showing the position of the locking-lever when adjusted to prevent the operation of the weaving mechanism. Fig. 3 is a view looking at the spacing-bar end of the machine. In this view the coupling between the frame and the pivot-bar is not shown and the portion of the frame adjacent to the coupling is cut away. Fig. 4 is a detail side view of the ball of wire and a central sectional view of the adjacent weaving mechanism. Fig. 5 is a detail plan view of the locking-lever and connections, showing their adjustment to permit the weaving mechanism to weave the stay-wire with the horizontal fence-wire. Fig. 6 is a detail side view of the coupling and torsion-spring, located between the frame and the pivot-bar. Fig. 7 is a detail side view of the weaving-plate. Fig. 8 is a cross-sectional view of the frame on the line *a a* of Fig. 5.

In the accompanying drawings, the numeral 1 designates the frame of the machine, provided with a handle 2, in which handle an opening 3 and socket 4 are formed, and said frame is also provided with a flange 5, with a shoulder 6, with an upwardly-projecting portion 7, with a tension-bar 8, in the outer end of which notches 9 are formed at different elevations, and with curved guiding-flanges 10, and in said frame 1, between said curved guiding-flanges 10, the slot 11 is formed.

12 designates a coupling to which the frame 1 is pivotally secured by the bolt 13, and 14 is a pivot-bar on which said coupling 12 swings pivotally and slides vertically.

15 designates a torsion-spring, the free ends *a'* of which are rigidly secured to the coupling 12, and the central saddle *b* of said spring 15 is adapted to rest in the notches 9 of the tension-bar 8, which extends over on said coupling 12, and the tension of said bar 8 is regulated according to the notch 9, in which the saddle *b* of the spring 15 is inserted.

16 and 17 designate upper and lower horizontal bars, each provided at one end with the flanges 18, between which are the recesses *b'*, *b²*, and *b³*, and through said flanges 18 the pin 19 extends, and near the other ends of said bars 16 and 17 sockets are formed, in which the spacing-bar 20 is rigidly secured by the set-screws 21.

22 designates upper and lower brackets extending from the upper and lower horizontal bars 16 and 17, and in sockets in the outer ends of said brackets 22 the pivot-bar 14 is rigidly secured by the set-screws 23.

24 designates spacers or spacing-clips, which are adjustable on the spacing-bar 20, and when said spacers 24 are properly adjusted they are rigidly secured at that point by the set-screws 25, and said spacers are provided with flanges *c* through which the pin 26 extends.

27 designates a spindle rigidly secured to the frame 1, and 28 an internal gear-wheel which rotates perfectly free thereon, and said gear-wheel is provided on its outer face with a cam 29 for the purpose which will be hereinafter set forth.

30 designates a shaft supported by and rotating perfectly free in bearings in the frame 1; 31, a gear-pinion mounted on one end of said shaft 30 and engaging with the internal gear-wheel 28; 32, a beveled gear-wheel mounted on the other end of said shaft 30, and in said beveled gear-wheel 32 a socket 33 is

formed, and the upwardly-extending portion 7 of the frame 1 extends over this beveled gear-wheel 32.

34 designates a shaft, a portion of the outer face of which, near one end, is screw-threaded, and said shaft rotates perfectly free in bearings in the frame 1, and at right angles to the shaft 30 and formed in one side of and extending throughout the whole length of said shaft 34 is a narrow channel 35, and the narrow slot or opening 11 formed in the frame 1 extends across the end of said frame 1 and is parallel with the channel 35 in the hollow shaft 34, and said channel 35 is adapted to register and communicate with the slot or opening 11 in said frame 1. 36 designates a beveled gear-wheel on one end of said shaft 34, which engages with the beveled gear-wheel 32, and 37 is a slot extending inward from one side and past the center of said beveled gear-wheel 36, which slot 37 is in line with the channel 35 in said shaft 34 and communicates therewith, as well as with the opening 11 in the frame 1.

38 designates a steel weaving plate or die in which the double pair of sockets n and m are formed, and said weaving-plate 38 is rigidly secured to the outer face of the beveled gear-wheel 36 by the screws 39, as shown in Fig. 4.

40 designates an enlarged head, a portion of the inner face of which is screw-threaded and engages with the screw-threaded outer face of the shaft 34, and when engaging with one another, as shown in Fig. 4, they are further secured together by the rivets c^2, and 41 is a sleeved spindle or bobbin secured to the rim and at one side of the head 40, on which spindle the ball of wire d, from which the stays are formed, is supported.

42 designates a plate which is rigidly secured to the outer side of the internal gear-wheel 28 and which is provided with an annular supporting-flange 43, in which the sockets 44 are formed, and 45 is a rim-flange forming part of and secured to and located at right angles to the flange 43.

46 designates a ratchet-crank, the inner end of which encircles the annular flange 43, and said crank is securely held on said annular flange 43 by the rim-flange 45.

47 designates a dog provided with an angular end 48, which extends through an opening 49 in the front side of the ratchet-crank 46. 50 and 51 designate flanges on the ratchet-crank 46, in which said dog 47 is guided and held in place, and the inner end of said dog 47 rests on the annular flange 43 and is fitted to and adapted to be projected in the sockets 44 in said annular flange 43, and 52 designates a coil-spring which encircles said dog 47 and is held in place between the shoulder e thereon and the flange 50 on the ratchet-crank 46.

53 designates an automatic dog which is adjustable back and forth in the opening 3, formed in the handle 2, and in the socket 4 in the handle 2 at the end of said opening 3 the adjacent end of said dog 53 is inserted and moves back and forth perfectly free, and the other end of said automatic dog 53 is provided with the flanges 54 and 54^a, which grasp the opposite sides of the handle 2 and hold and guide said automatic dog 53 in line with said handle 2 as said dog moves back and forth, and 55 is a spring encircling said dog 53, which spring is interposed between the handle 2 at the end of the opening 3 and the flanges 54.

56 designates a locking-lever which is pivoted on the pivot 57, secured to the handle 2, and said lever 56 is formed with a shoulder f (shown in Fig. 1) and is adapted to engage with the flange 54^a, which extends upward above the handle 2, and said flange 54^a is also adapted to be engaged by the cam 29 on the internal gear-wheel 28.

58 designates a locking-bolt loosely secured to the end of the locking-lever 56 and provided with a shoulder g, and said locking-bolt 58 is supported by and is adjustable back and forth perfectly free in bolt-holes in the flange 5 and in the upwardly-extending portion 7 of the frame 1, and 59 is a coil-spring encircling said bolt 58, which is interposed between the shoulder g thereon and the flange 5 on the frame 1, and the end of said locking-bolt 58 is projected through said upwardly-extending portion 7 of the frame 1 and is adapted to engage with a socket 33, formed in the beveled gear-wheel 32, when required.

c' designates flanges arranged on the upper and lower horizontal bars 16 and 17, opposite the spacer-bar 20, through which flanges c' pins 26 extend. These flanges are similar to the flanges c on the spacers 24 through which the pins 26 extend.

60 designates a hook secured to the upper flange c' on the upper horizontal bar 16, and 61 designates the horizontal fence-wires. The horizontal fence-wires 61 are spaced apart as required and their ends secured to fence-posts or other suitable supports. The upper and lower horizontal bars 16 and 17 are adjusted on the spacing-bar 20 according to the distance or space between the top and bottom horizontal fence-wires 61, and when so adjusted said horizontal bars 16 and 17 are rigidly secured to said spacing-bar 20 by the set-screws 21, and the top and bottom horizontal fence-wires 61 are inserted in the space between the flanges c' at one end and in one of the recesses b^2 between the flanges 18 at the other end of said upper and lower horizontal bars, respectively, and are securely held therein by the pins 26 and 19, respectively; but if the ground was uneven and the horizontal fence-wires 61 extended in an inclined direction downward the upper and lower fence-wires should be inserted in the recesses b^3, and if said horizontal fence-wires 61 extended in an inclined direction upward they should be inserted in the recesses b' at the free ends of

said horizontal bars 16 and 17. The spacers 24 are then adjusted on the spacer-bar 20, one opposite each horizontal fence-wire 61, and when so adjusted said spacers are rigidly secured to said spacer-bar by the set-screws 25. A horizontal fence-wire 61 is then inserted between the flanges c of each spacer 24 and securely held between said flanges c by the pins 26, and the securing of the horizontal fence-wires 61 between the flanges c' at one end and in either of the recesses b', b^2, or b^3 at the other end of said horizontal bars 16 and 17 and between the flanges c of the spacers 24. Said horizontal bars 16 and 17, together with the spacer-bar 20, are held in engagement with and at the same time adapted to move freely lengthwise on said horizontal fence-wires 61. The coupling 12 is then mounted on the pivot-bar 14 and is adapted to swing pivotally and slide vertically on said bar. The inside end of the ball of stay-wire d is then projected through the channel 35 in the shaft 34, through the slot 37 in the beveled gear-wheel 36, through the slot n in the weaving-plate 38, and then upward and twisted around or otherwise secured to the hook 60 on the flange c', secured to the horizontal bar 16. When so arranged, the operation is as follows: The operator grasps the handle 2 with his left hand to steady and adjust the machine to or from the horizontal fence-wires 61 and the handle of the ratchet-crank 46 with his right hand to operate the weaving mechanism, and when the machine is locked or adjusted to the position shown in Fig. 2 the channel 35 in the shaft 34, the slot 37 in the beveled gear-wheel 36, and the slot m in the weaving-plate 38, which are in line with and communicate with one another, are so arranged as to be in line with and communicate with the opening 11 in the frame 1, so that when the machine is adjusted, as shown in Fig. 2, it is moved toward the horizontal fence-wire 61 until the latter has passed through the opening 11 in the frame 1 and rests in the channel 35 and in the slots 37 and m, in the shaft 34, beveled gear-wheel 36, and weaving-plate 38, respectively. When so arranged and before the machine can be operated, the locking-lever 56 must be adjusted (most readily by the thumb) from the position shown in Fig. 2 to the position shown in Fig. 5 to withdraw the locking-bolt 58 from the socket 33 in the beveled gear-wheel 32, and when said locking-lever is so adjusted by rotating the ratchet-crank 46 once the internal gear-wheel 28 is rotated once, and the gear-pinion 31, being one-third the size of said internal gear-wheel 28 and engaging therewith, is rotated three times, as well as the shaft 30, beveled gear-wheels 32 and 36, shaft 34, and weaving-plate 38. This weaves or wraps the stay-wire d, which is projected through the slot or opening n, three times around the horizontal fence-wire 61 to form a three-turn joint of said stay-wire d on said horizontal fence-wire 61, and the friction of the stay-wire d on the weaving-plate 38 as it is drawn through the slot n causes said stay-wire to be woven or wrapped tightly around the horizontal fence-wire 61, and thus rigidly secure one to the other at this point, and the instant that the locking-lever 56 is adjusted to the position shown in Fig. 5 the flange 54^a of the automatic dog 53 is released from the shoulder f of said locking-lever. The spring 55 then instantly projects the dog 53 forward, so that said flange 54^a will abut against and ride on the periphery of the internal gear-wheel 28 in position to be engaged by the cam 29, and the end of said flange 54^a, which projects above the handle 2, will abut against the side of the locking-lever 56 to prevent it from accidentally returning to its normal position, thus holding the locking-bolt 58 disengaged from the socket 33 in the beveled gear-wheel 32. Just before the ratchet-crank 46 and internal gear-wheel 28 have completed one revolution, which is just before the completion of the third revolution of the beveled gear-wheels 32 and 36, the cam 29 abuts against the flange 54^a and moves it backward until said flange 54^a is beyond the shoulder f on the locking-lever 56, and when in this position the flange 54^a is disengaged from the side of the locking-lever 56, when the latter is instantly returned to its normal position (shown in Fig. 2) by the action of the spring 59 on the locking-bolt 58, which action of said spring 59 projects the end of said locking-bolt 58 into the socket 33 in the beveled gear-wheel 32 the instant that said socket comes opposite the end of said bolt, and thus automatically locks the machine from further operation, and the movement of the lever 56 to the position shown in Fig. 2 brings the shoulder f in front of the flange 54^a to hold the automatic dog 53 in this backward position, and when the machine is in the position shown in Fig. 2 the channel 35 and slots 37 and m in the shaft 34, beveled gear-wheel 36, and weaving-plate 38, respectively, are in line with and communicate with the opening 11 in the frame 1, as before described. When these parts are so adjusted, the machine is moved on the pivot-bar 14 back from the horizontal fence-wire 61 until the machine is free from the latter and until sufficient wire is drawn from the ball of stay-wire d to extend to the next horizontal fence-wire, when the machine is lowered on the pivot-bar 14 until the next horizontal fence-wire is in line with the opening 11 in the frame 1, when the operation hereinbefore described is repeated to weave the stay-wire d around the succeeding horizontal fence-wire 61, and so on until the stay-wire d is woven around and connects the horizontal fence-wires together, when the stay-wire is cut below the bottom fence-wire. The machine is then moved lengthwise on the horizontal fence-wires until it is opposite the point where it is desired to have the horizontal fence-wires con-

nected together again by the stay-wire *d*, when the operation hereinbefore described is repeated. When drawing the machine back from the horizontal fence-wire 61 after forming the three-turn joint and the frame being pivoted on said coupling 12 at about right angles from said three-turn joint on said horizontal fence-wire at the commencement of the operation of drawing the machine back from said horizontal fence-wire, the frame 1 moves pivotally on the coupling 12 (independent of the movement of the coupling 12 on the pivot-bar 14) until the shoulder 6 on said frame abuts against said coupling 12. This independent pivotal movement of said frame on said coupling adjusts the weaving device at such an angle to the horizontal fence-wire as to reduce the friction of the stay-wire *d* on the weaving-plate 38 as the former passes through the latter, and said weaving device is at such an angle to the horizontal fence-wire that the spacing portion of the stay-wire will be drawn in almost a straight line from said ball, the slight friction remaining of said stay-wire *d* on said weaving-plate 38 being just sufficient to take the curl out of the stay-wire, which is produced by winding it on the bobbin, and thereby preventing the warp or curl from showing in the stay-wire when woven with the horizontal fence-wires, and this drawing of the stay-wire *d* in an almost straight line from the ball permits the wire to be drawn freely from the ball, and thus provide a machine which can be very rapidly and easily operated, and the yielding of the torsion-spring 15 when drawing the machine back from the horizontal fence-wire enables it to be drawn back with a steady even motion. The weaving-plate 38 is provided with two slots *n* for the stay-wire and two slots *m* for the horizontal fence-wire, so that if one of said slots should become worn or damaged from any cause the other pair of slots could be adjusted in their place. Again, by means of the ratchet-crank 46 after having made half a turn with said ratchet-crank and then pulling the dog 47 outward said crank 46 can be reversed half a turn and engaged with the opposite slot 44 and two half-turns made, which are equal to a whole turn required to make a three-turn joint, so that by the use of the ratchet-crank it is possible to weave the stay-wire *d* with a bottom horizontal fence-wire close to the ground without digging away any earth. As a result a simple, solid, positive, and strong machine is provided and one that has great wearing qualities; one in which the crank 46 is operated by the right hand while the left controls the machine and locking-lever, so that in the use of this machine the position of the operator is perfectly easy and natural; one which will weave a stay-wire *d*, with horizontal fence-wires of any height, and give any spacing between the stay-wires *d*; one which is adapted to weave a stay-wire *d* with the bottom horizontal fence-wire close to the ground without digging away the earth; one in which the spacing portion of the stay-wire *d* is drawn in almost a straight line from the ball, thus making the machine easy and light-running and at the same time sufficient friction remaining to take the curl (produced by winding the stay-wire *d* on the bobbin) out of said stay-wire *d*, and one that will rapidly and with a very high standard of perfection weave stay-wires *d* with horizontal fence-wires.

I have found by experiment that the construction herein shown and described gives the best results. At the same time while I prefer said construction I do not wish to limit myself to the details thereof, as they may be modified in various ways without departing from the spirit of my invention.

Having thus described my invention, I claim—

1. In a wire-fence-weaving machine, a spacer-bar 20, upper and lower horizontal bars 16 and 17 mounted on said spacer-bar, and means for holding the upper and lower horizontal fence-wires 61 in engagement with said horizontal bars, and brackets 22 extending from said horizontal bars, in combination with a pivot-bar 14 secured to said brackets, and a frame 1 connected to and adapted to swing pivotally and slide vertically on said pivot-bar, substantially as and for the purpose set forth.

2. In a wire-fence-weaving machine, a spacer-bar 20, upper and lower horizontal bars 16 and 17 and spacers 24 mounted on said spacer-bar, and means for holding said horizontal bars and spacers at the position to which they are adjusted on said spacer-bar and for holding the horizontal fence-wires 61 in engagement therewith, and brackets 22 extending from said horizontal bars, in combination with a pivot-bar 14 secured to said brackets, and a frame 1 connected to and adapted to swing pivotally and slide vertically on said pivot-bar, substantially as and for the purpose set forth.

3. In a wire-fence-weaving machine, a spacer-bar 20, upper and lower horizontal bars 16 and 17, provided with flanges, and mounted on said spacer-bar, means for holding the upper and lower horizontal fence-wires 61 between said flanges, and brackets 22 extending from said horizontal bars, in combination with a pivot-bar 14 secured to said brackets, and a frame 1 connected to and adapted to swing pivotally and slide vertically on said pivot-bar, substantially as and for the purpose set forth.

4. In a wire-fence-weaving machine, a spacer-bar 20, upper and lower horizontal bars 16 and 17 and spacers 24, provided with flanges, and mounted on said spacer-bar, and means for holding said horizontal bars and spacers at the position to which they are adjusted on said spacer-bar and for holding the horizontal fence-wires 61 between said flanges,

and brackets 22 extending from said horizontal bars, in combination with a pivot-bar 14 secured to said brackets, and a frame 1 connected to and adapted to swing pivotally and slide vertically on said pivot-bar, substantially as and for the purpose set forth.

5. In a wire-fence-weaving machine, a pivot-bar 14, means for supporting said bar, and a coupling 12 adapted to swing pivotally and slide vertically on said bar, in combination with a frame 1 pivotally mounted on said coupling and provided with a shoulder 6 which is adapted to engage with said coupling to limit the pivotal movement of said frame thereon, substantially as and for the purpose set forth.

6. In a wire-fence-weaving machine, a pivot-bar 14, means for supporting said bar, and a coupling 12 adapted to swing pivotally and slide vertically on said bar, in combination with a frame 1 provided with a tension-bar 8, and a torsion-spring 15 connected at one end to said coupling and its other end engaging with said tension-bar, to adapt said frame to move pivotally on said coupling with a steady even motion, substantially as and for the purpose set forth.

7. In a wire-fence-weaving machine, a pivot-bar 14, means for supporting said bar, and a coupling 12 adapted to swing pivotally and slide vertically on said bar, in combination with a frame 1 provided with a tension-bar 8, in which notches, *a*, are formed at different elevations, and a torsion-spring 15 connected at one end to said coupling and its other end adapted to engage with and rest in one of the notches, *a*, in said tension-bar, to adapt said frame to move pivotally on said coupling with a steady even motion, and to regulate the resistance of said spring on said tension-bar, substantially as and for the purpose set forth.

8. In a wire-fence-weaving machine, a pivot-bar 14, means for supporting said bar, and a coupling 12 adapted to swing pivotally and slide vertically on said bar, in combination with a frame 1 provided with a shoulder 6 and tension-bar 8, and a torsion-spring 15 connected at one end to said coupling and its other end adapted to engage with said tension-bar, to adapt said frame to move pivotally on said coupling with a steady even motion, and to limit the pivotal movement of said frame on said coupling, substantially as and for the purpose set forth.

9. In a wire-fence-weaving machine, a pivot-bar 14, means for supporting said bar, and a coupling 12 adapted to swing pivotally and slide vertically on said bar, in combination with a frame 1 provided with a shoulder 6 and tension-bar 8, in which bar 8 notches, *a*, are formed at different elevations, and a torsion-spring 15, connected at one end to said coupling, and its other end adapted to engage with and rest in one of the notches, *a*, in said tension-bar, to adapt said frame to move pivotally on said coupling with a steady even motion, to limit the pivotal movement of said frame on said coupling, and to regulate the resistance of said spring on said tension-bar, substantially as and for the purpose set forth.

10. In a wire-fence-weaving machine, a spacer-bar 20, upper and lower horizontal bars 16 and 17 and spacers 24 mounted on said spacer-bar, and means for holding said horizontal bars and spacers at the position to which they are adjusted on said spacing-bar, and for holding the horizontal fence-wires 61 in engagement therewith, brackets 22 extending from said horizontal bars and a pivot-bar 14 secured to said brackets, in combination with a coupling 12 adapted to swing pivotally and slide vertically on said pivot-bar, a frame 1 pivotally mounted on said coupling 12 and provided with a shoulder 6, substantially as and for the purpose set forth.

11. In a wire-fence-weaving machine, a spacer-bar 20, upper and lower horizontal bars 16 and 17 and spacers 24 mounted on said spacer-bar, and means for holding said horizontal bars and spacers at the position to which they are adjusted on said spacing-bar and for holding the horizontal fence-wires 61 in engagement therewith, brackets 22 extending from said horizontal bars, and a pivot-bar 14 secured to said brackets, in combination with a coupling 12 adapted to swing pivotally and slide vertically on said pivot-bar, a frame 1 pivotally secured to said coupling and provided with a tension-bar 8, and a torsion-spring 15 connected at one end to said coupling and its other end adapted to engage with said tension-bar, substantially as and for the purpose set forth.

12. In a wire-fence-weaving machine, a spacer-bar 20, upper and lower horizontal bars 16 and 17 and spacers 24, mounted on said spacer-bar, and means for holding said horizontal bars and spacers at the position to which they are adjusted on said spacing-bar and for holding the horizontal fence-wires 61 in engagement therewith, brackets 22 extending from said horizontal bars, and a pivot-bar 14 secured to said brackets, in combination with a coupling 12 adapted to swing pivotally and slide vertically on said pivot-bar, a frame 1 provided with a shoulder 6 and tension-bar 8, and a torsion-spring 15 connected at one end to said coupling and its other end adapted to engage with said tension-bar, substantially as and for the purpose set forth.

13. In a wire-fence-weaving machine, a frame 1, provided with a handle 2 and with a flange 5, a locking-lever 56 pivoted on said handle, a locking-bolt 58 provided with a shoulder, *g*, and connected to said locking-lever, and extending through said flange 5, and a coil-spring 59 encircling said locking-bolt and interposed between the shoulder, *g*, thereon and the flange 5, in combination with

a beveled gear-wheel 32 in which a socket 33 is formed, and means for supporting said beveled gear-wheel, substantially as and for the purpose set forth.

14. In a wire-fence-weaving machine, a frame 1 provided with a flange 5 and with a handle 2, a locking-lever 56 pivoted on said handle, a locking-bolt 58 provided with a shoulder, *g*, connected to said locking-lever and extending through said flange 5, and a coil-spring 59 encircling said locking-bolt and interposed between the shoulder, *g*, thereon and the flange 5, in combination with an automatic dog 53 provided with flanges 54 and 54ª, a coil-spring 55 encircling said dog, and interposed between said flanges and an abutment on said handle, and means for guiding and holding said dog in line as it is adjusted back and forth, substantially as and for the purpose set forth.

15. In a wire-fence-weaving machine, a frame 1 provided with a flange 5, and with a handle 2, in which an opening 3 and socket 4 are formed, a locking-lever 56 pivoted on said handle, a locking-bolt 58 provided with a shoulder, *g*, connected to said locking-lever and extending through said flange 5, and a coil-spring 59 encircling said locking-bolt and interposed between the shoulder, *g*, thereon and the flange 5, in combination with an automatic dog 53 located in said opening 3 and socket 4, and provided with flanges 54 and 54ª, and a coil-spring 55 encircling said dog and interposed between said flanges thereon and an abutment on said handle, substantially as and for the purpose set forth.

16. In a wire-fence-weaving machine, a frame 1 provided with a flange 5, with a handle 2, and with a spindle 27, a locking-lever 56 pivoted on said handle, a locking-bolt 58 provided with a shoulder, *g*, connected to said locking-lever and extending through said flange 5, a coil-spring 59 encircling said locking-bolt and interposed between the shoulder, *g*, thereon and the flange 5, an automatic dog 53 provided with flanges 54 and 54ª, a coil-spring 55 encircling said dog and interposed between said flanges and an abutment on said handle, and means for guiding and holding said dog in line as it is adjusted back and forth, in combination with a wheel 28 mounted on said spindle 27 and provided with a cam 29, substantially as and for the purpose set forth.

17. In a wire-fence-weaving machine, a frame 1 provided with a handle 2, and a locking-lever 56 pivoted on said handle and provided with a shoulder, *f*, in combination with an automatic dog 53 provided with flanges 54 and 54ª, the latter adapted to engage with said shoulder, *f*, on said locking-lever, and a coil-spring 55 encircling said dog and interposed between said flanges and an abutment on said handle, and means for guiding and holding said dog in line as it is adjusted back and forth, substantially as and for the purpose set forth.

18. In a wire-fence-weaving machine, a frame 1 provided with a handle 2, and a locking-lever 56 pivoted on said handle, in combination with an automatic dog 53 provided with flanges 54 and 54ª, the latter adapted to engage with the side of the locking-lever to hold the machine unlocked, a coil-spring 55 encircling said dog and interposed between said flanges and an abutment on said handle, and means for guiding and holding said dog in line as it is adjusted back and forth, substantially as and for the purpose set forth.

19. In a wire-fence-weaving machine, a frame 1 provided with a handle 2 and spindle 27, a locking-lever 56 pivoted on said handle, an automatic dog 53 provided with flanges 54 and 54ª, the latter adapted to engage with the side of the locking-lever, a coil-spring 55 encircling said dog and interposed between said flanges and an abutment on said handle, and means for guiding and holding said dog in line as it is adjusted back and forth, in combination with a wheel 28 mounted on said spindle 27, and provided with a cam 29 which is adapted to engage with said automatic dog, substantially as and for the purpose set forth.

20. In a wire-fence-weaving machine, a frame 1 provided with a flange 5, with a handle 2, and with a spindle 27, a locking-lever 56 pivoted on said handle and provided with a shoulder, *f*, a locking-bolt 58 provided with a shoulder, *g*, connected to said locking-lever and extending through said flange 5, a coil-spring 59 encircling said locking-bolt and interposed between the shoulder, *g*, thereon and the flange 5, an automatic dog 53 provided with flanges 54 and 54ª, the latter adapted to engage with said shoulder, *f*, on said locking-lever, a coil-spring 55 encircling said dog and interposed between said flanges and an abutment on said handle, and means for guiding and holding said dog in line as it is adjusted back and forth, in combination with a wheel 28 mounted on said spindle 27 and provided with a cam 29, substantially as and for the purpose set forth.

21. In a wire-fence-weaving machine, a frame 1 in which a slot 11 is formed, and which is provided with a spindle 27, an internal gear-wheel 28 mounted on said spindle, and a ratchet-crank 46 secured to said gear-wheel, in combination with a shaft 34 mounted in said frame and in which a channel 35 is formed, a weaving-plate 38 connected to said shaft 34, in which plate slots, *n*, and, *m*, are formed, the slot, *m*, being formed in said plate in line with the channel 35 in the shaft 34, and both adapted to register with the slot 11 in the frame 1, and means for communicating motion from said gear-wheel 28 to said shaft 34, substantially as and for the purpose set forth.

22. In a wire-fence-weaving machine, a

frame 1 provided with a spindle 27 and in which the slot 11 is formed, an internal gear-wheel 28 mounted on said spindle, a plate 42 secured to said gear-wheel, and provided with an annular flange 43, in which sockets 44 are formed, and a rim-flange 45 formed on said annular flange, in combination with a crank 46, the inner end of which encircles said annular flange and which is provided with flanges 50 and 51, a dog 47 held in contact with said crank, and adapted to engage with and be disengaged from the sockets 44 in said annular flange 43, and provided with a shoulder, *e*, and a spring 52 encircling said dog and interposed between said flange 50 on said crank and said shoulder, *e*, on said dog, substantially as and for the purpose set forth.

23. In a wire-fence-weaving machine, a frame 1 in which a slot 11 is formed, and which is provided with a spindle 27 and curved guides 10, an internal gear-wheel 28 mounted on said spindle, and a ratchet-crank 46 secured to said gear-wheel, in combination with a shaft 34 mounted in said frame, and in which a channel 35 is formed, a weaving-plate 38 connected to said shaft 34, in which plate slots, *n*, and, *m*, are formed, the slot, *m*, being formed in said plate in line with the channel 35 in the shaft 34, and both adapted to register with the slot 11 in the frame 1, and means for communicating motion from said gear-wheel 28 to said shaft 34, substantially as and for the purpose set forth.

24. In a wire-fence-weaving machine, a frame 1 in which a slot 11 is formed, and which is provided with a spindle 27 and curved guides 10, an internal gear-wheel 28 mounted on said spindle, and a ratchet-crank 46 secured to said gear-wheel, in combination with a shaft 30 mounted in said frame, a gear-pinion 31 secured to one end and a beveled gear-wheel 32 to the other end of said shaft 30, a shaft 34 in which a channel 35 is formed, mounted in said frame and located at right angles to said shaft 30, a beveled gear-wheel 36 in which a slot 37 is formed, secured to one end of and an enlarged head 40 to the other end of said shaft 34, a weaving-plate 38 in which slots, *n*, and, *m*, are formed, secured to said beveled gear-wheel 36, and a sleeved spindle or bobbin secured to and at one side of said enlarged head, substantially as and for the purpose set forth.

In testimony whereof I have signed in the presence of the two undersigned witnesses.

ARTHUR E. BLASHILL.

Witnesses:
P. J. EDMUNDS,
A. BYRICK.