Aug. 3, 1937. H. S. HARTLEY 2,088,650

POLISHING AND SCRUBBING DEVICE

Filed April 16, 1934 2 Sheets-Sheet 1

Fig. 1.

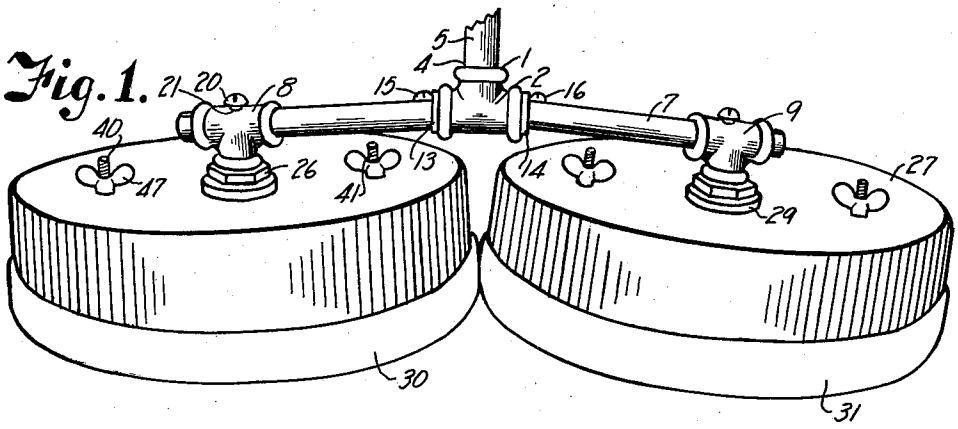

Fig. 2.

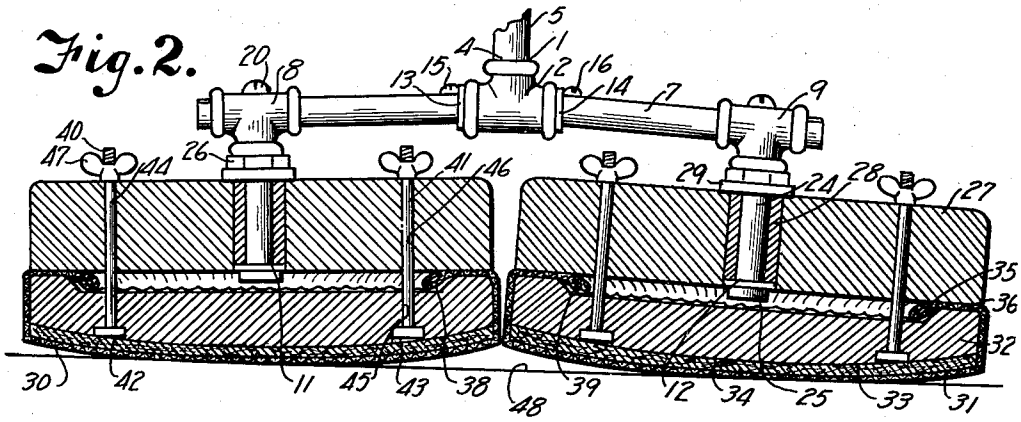

Fig. 3.

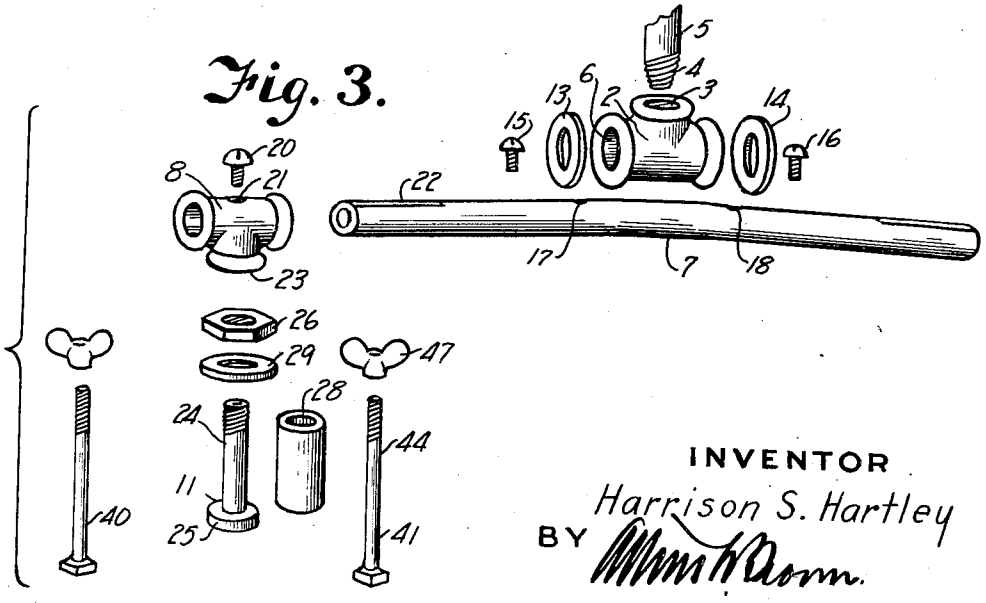

INVENTOR

Harrison S. Hartley

BY Munn & Dorn.

ATTORNEY

Aug. 3, 1937. H. S. HARTLEY 2,088,650

POLISHING AND SCRUBBING DEVICE

Filed April 16, 1934 2 Sheets-Sheet 2

Fig. 4.

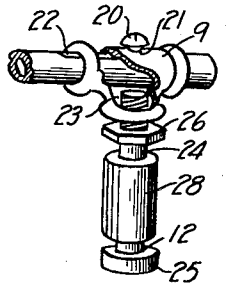

Fig. 5.

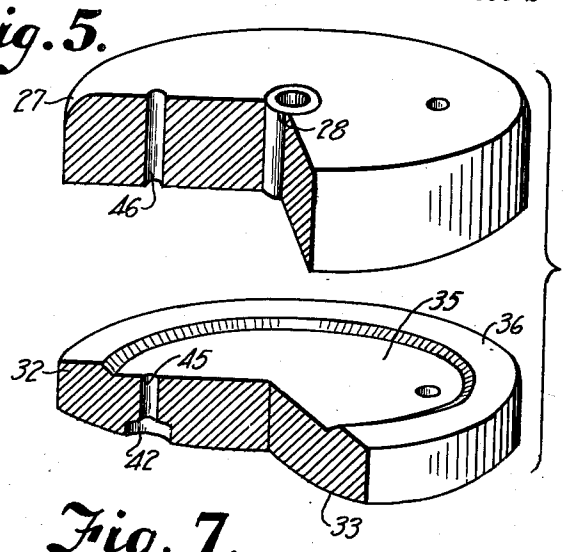

Fig. 6.

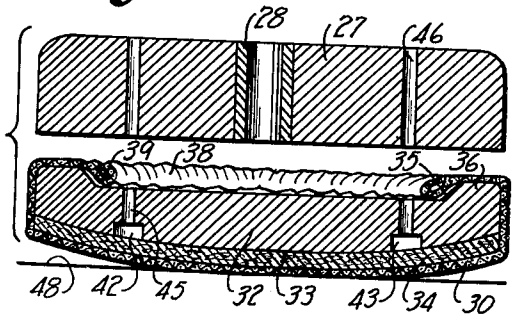

Fig. 7.

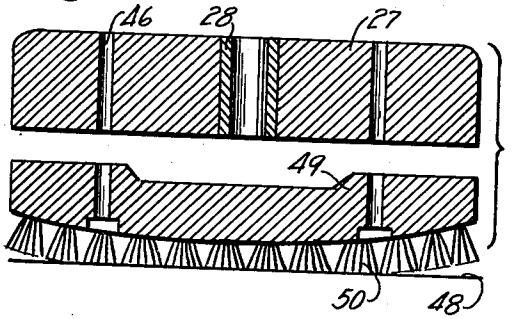

Fig. 8.

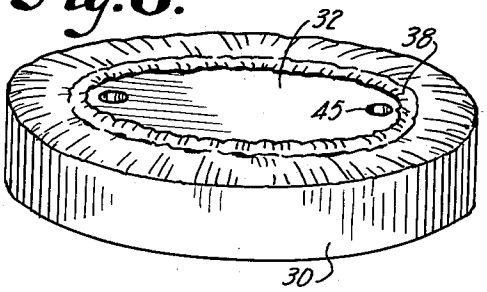

Fig. 9.

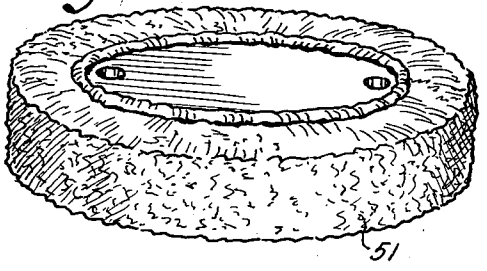

Fig. 10.

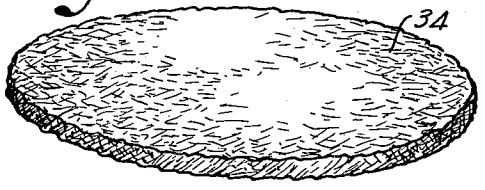

INVENTOR
Harrison S. Hartley
BY
ATTORNEY

Patented Aug. 3, 1937 2,088,650

UNITED STATES PATENT OFFICE

2,088,650

POLISHING AND SCRUBBING DEVICE

Harrison S. Hartley, St. Joseph, Mo.

Application April 16, 1934, Serial No. 720,736

2 Claims. (Cl. 15—98)

This invention relates to polishing and scrubbing devices and has for its principal object to provide a manually propelled device wherein the polishing, buffing, or scrubbing elements are caused to be actuated incidental to movement of the device over a floor or other surface under treatment, thereby facilitating such operations so that the operator is relieved of the usual drudgery incidental to floor maintenance.

Other important objects of the invention are to provide a simple, inexpensive construction, to provide a device having interchangeable polishing, buffing, scrubbing, or dusting attachments, to provide a device which can be readily manipulated in close quarters, and to provide a rotary wiping effect simultaneously with a reciprocatory movement to simulate hand operation.

In accomplishing these and other objects of the invention, I have provided improved details of structure, the preferred form of which is illustrated in the accompanying drawings, wherein:

Fig. 1 is a perspective view of a polishing and scrubbing device embodying the features of the present invention.

Fig. 2 is a vertical sectional view through the device particularly illustrating the mounting of the rotary heads.

Fig. 3 is a detail perspective view of the parts composing the handle fixture, shown in disassembled spaced relation.

Fig. 4 is a detail perspective view of one of the spindle elements.

Fig. 5 is a detail perspective view partly in section of one of the head elements.

Fig. 6 is a vertical sectional view through one of the head elements showing the application of a polishing cloth thereto.

Fig. 7 is a similar view showing the application of the scrubbing brush.

Fig. 8 is a perspective view of the polishing element shown in Fig. 6 as applied to the lower head member.

Fig. 9 is a perspective view of a modified form of polishing element particularly adapted for the application of wax.

Fig. 10 is a perspective view of the pad which is inserted between the polishing cloth and the lower head member.

Referring more in detail to the drawings:

1 designates a fixture including a T-member 2 having an internal socket 3 for mounting the threaded end 4 of a handle 5. Formed in the T-member at right angles to the socket 3 is a bore 6 for passing a tubular shaft carrying at its outer ends similar T-members 8 and 9 for mounting spindles 11 and 12. The T-member 2 is loosely movable on the shaft 7 to allow angular adjustment of the handle 5 relatively to the surface being treated by the mop as later described and is retained in central position thereon by washers 13 and 14 engaging against the ends of the T-member and secured by screws 15 and 16 extending through threaded openings 17 and 18 in the shaft, as clearly shown in Fig. 1.

The outer T-members 8 and 9 are adjustably secured on the projecting ends of the shaft by screws 20 extending through threaded openings 21 in the T-members and into splined grooves 22 on the member 7.

The ends of the member 7 extend at an obtuse angle with the handle in order that the axes of the socket portions 23 of the T-members 8 and 9 are positioned at inclined angles to the floor or other surface over which the device is propelled as later described.

Threaded in the socket portions 23 are bolts 24 having heads 25 on their outer ends and lock nuts 26 engaging against the socket portions 23 of the T-members to prevent rotation of the bolts as later described. The bolts 24 constitute spindles for rotatably mounting disk shaped heads 27 having central bushings 28 mounted on the bolts and retained between the heads 25 thereof and washers 29 which in turn engage against the lock nuts 26. The heads 27 may be formed of any suitable material and serve as upper clamping members for mounting the various attachments to be employed, such as polishing elements 30 and 31, as shown in Fig. 2. Cooperating with the members 27 are lower disks 32 of substantially the same diameter and preferably formed of metal or other heavy material.

The bottom faces 33 of the lower disks are of convex shape and mount felt pads or disks 34. The upper face of the lower disks are recessed as at 35 to accommodate tie portions of mop elements as well as the heads of the bolts 24.

The annular peripheral rims 36 produced by the recesses 35 form peripheral clamping surfaces for anchoring the polishing elements against the flat bottom faces of the upper disks, now to be described.

The polishing elements shown in Fig. 2 preferably include circular pieces of burlap or similar fabric having hemmed peripheries 38 carrying draw strings 39 so that they can be drawn over the lower disks and tightened by securing the draw strings.

The lower disks are provided wtih bolts 40 and 41 having heads mounted in recesses 42 and 43

formed in the lower faces thereof and having shanks 44 extending through openings 45 and through aligning openings 46 in the upper disk members. The bolts are of sufficient length to project from the upper face of the member 27 and carry wing nuts 47 whereby the lower disks are drawn tightly against the upper disks to anchor the polishing elements 30 and 31 therebetween.

Due to the angular relation of the spindles and the crown shaped face of the lower disks, the disks contact the floor at points offset from the axes thereof as indicated by the line 48. Thus, when the device is moved over the floor in one direction, the heads will rotate on their spindles and when the device is moved in the opposite direction, the disks will rotate reversely, thereby providing a wiping rotary contact of the polishing elements with the floor simultaneously with a reciprocatory movement imparted thereto by the handle.

When the device is to be used for scrubbing, the polishing elements are removed by loosening the wing nuts and removing the lower head members. A supplementary head member 49 is then applied having bristles 50 as shown in Fig. 7.

When the device is to be used for applying wax, the sheep wool covering as indicated at 51 is applied to the lower head members in the same manner as the polishing element.

In assembling a mop constructed as described, the T-member 2 is sleeved over the shaft 7 and secured in central position thereon by the washers 13 and 14 and the screws 15 and 16.

The handle 5 is then screwed into the socket 3, after which the end T-members 8 and 9 are applied to the ends of the shaft member 7 by inserting the screws 20. The bolts 24 constituting the spindles for the head members are then projected through the bushings 28, after which the washers 29 and lock nuts 26 are applied to the upper projecting ends of the bolts. The bolts are then threaded into the sockets 23 of the T-members until the lock nuts wedge tightly thereagainst. The upper head members are then free to rotate on the spindles.

If the device is to be used as a polishing element, the burlap disks will be applied to the lower disks, which are then clamped to the upper disks as above described. The device is then moved over the floor by push and pull motion to cause oscillatory rotation of the head members.

When the device is to be used as a mop, the lower head members are removed and the supplementary head members 49 are applied carrying the brushes. The device is then propelled over the floor in substantially the same manner as when the polishing elements are used.

When the device is to be used for applying wax to a floor, a sheep wool covering as shown in Fig. 9 is secured to the lower disks and liquid wax is applied directly thereto so that when the device is moved over the floor, the wax is evenly distributed when the head members are rotated incidental to push and pull action applied to the handle.

From the foreging, it is apparent that I have provided a polishing and scrubbing device which is more efficient because of the rotary movement of the polishing and scrubbing elements and that due to the rotary movement of the polishing elements, the floor or other surface may be polished with a minimum amount of effort on the part of the user.

What I claim and desire to secure by Letters Patent is:

1. In a device of the character described, a disk having a crowned traction face, a spindle, a supporting disk rotatably mounted thereon, and means on the traction disk engageable with the supporting disk for rotatably mounting the traction disk relative to the spindle.

2. In a device of the character described, a disk having a crowned traction face, a spindle, a supporting disk rotatably mounted thereon, means on the traction disk engageable with the supporting disk for rotatably mounting the traction disk relative to the spindle, and a polishing element on the traction disk having portions thereof adapted to be engaged between said disks whereby the polishing element is retained in working position on the traction disk.

HARRISON S. HARTLEY.