April 19, 1960 A. F. KRITSCHER 2,932,889

PIPE UPSETTING

Filed July 20, 1955 2 Sheets-Sheet 1

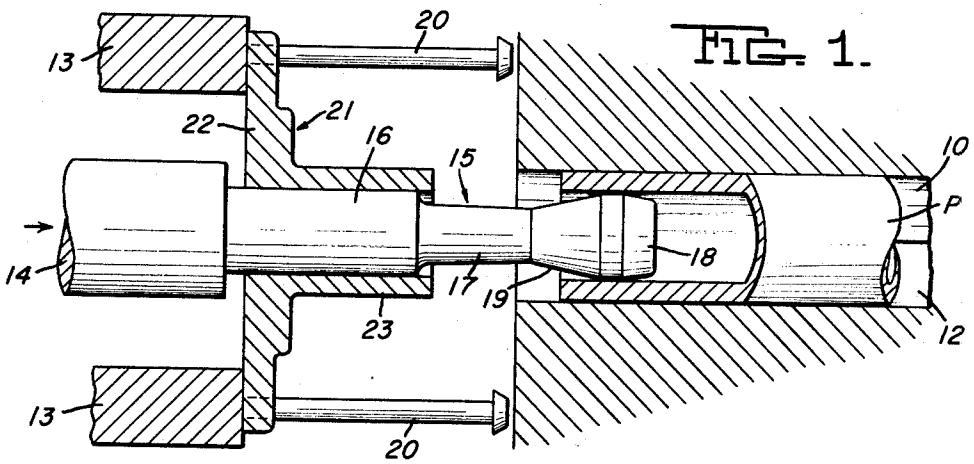

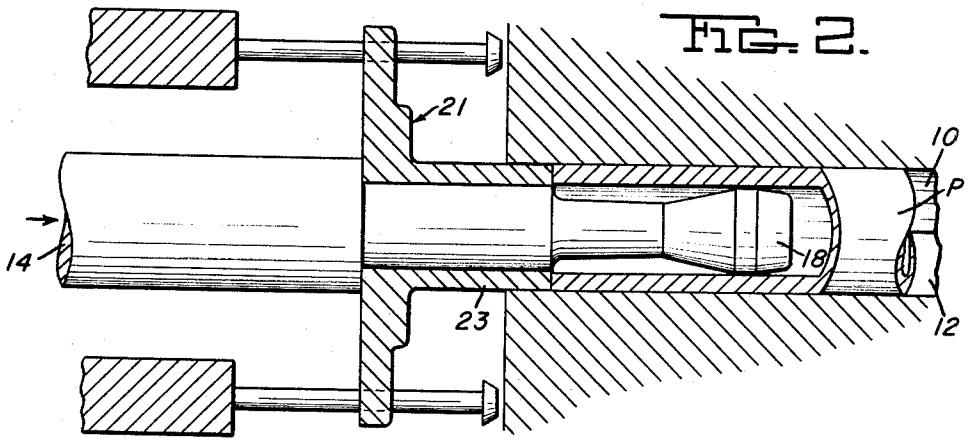

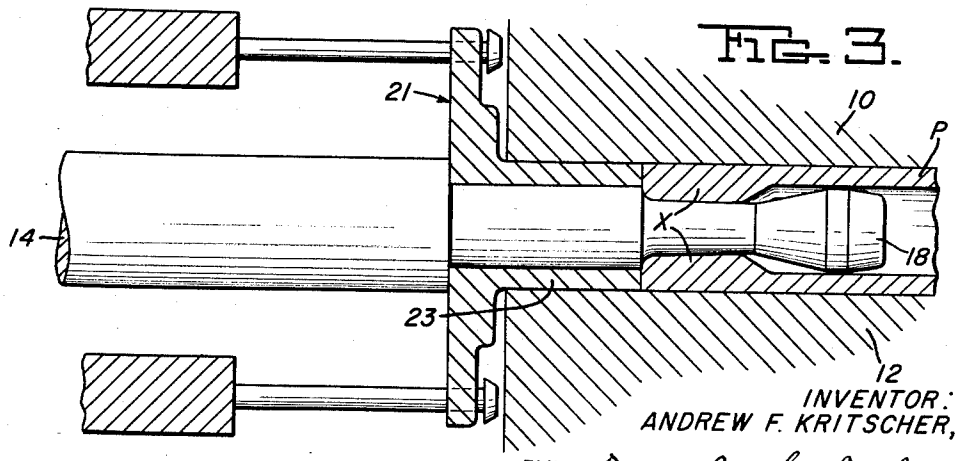

INVENTOR:
ANDREW F. KRITSCHER,

BY: Donald G. Dalton
his Attorney.

April 19, 1960 A. F. KRITSCHER 2,932,889

PIPE UPSETTING

Filed July 20, 1955 2 Sheets-Sheet 2

FIG. 4.

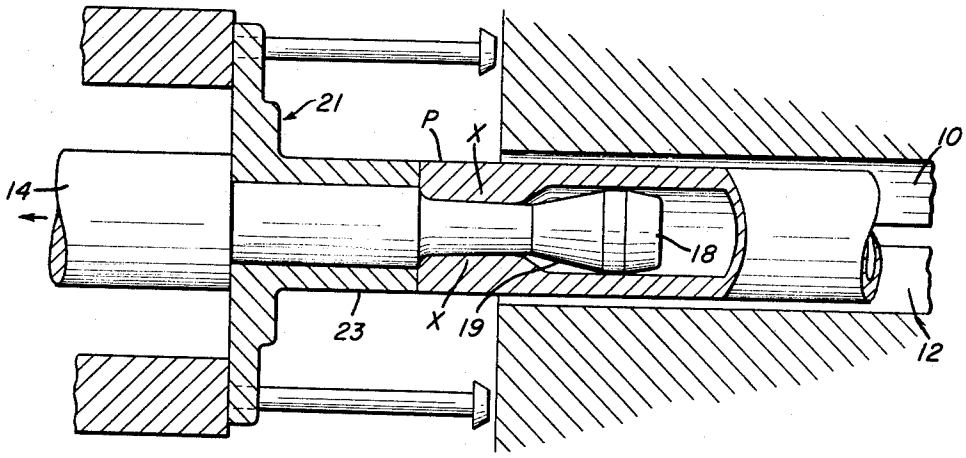

FIG. 5.

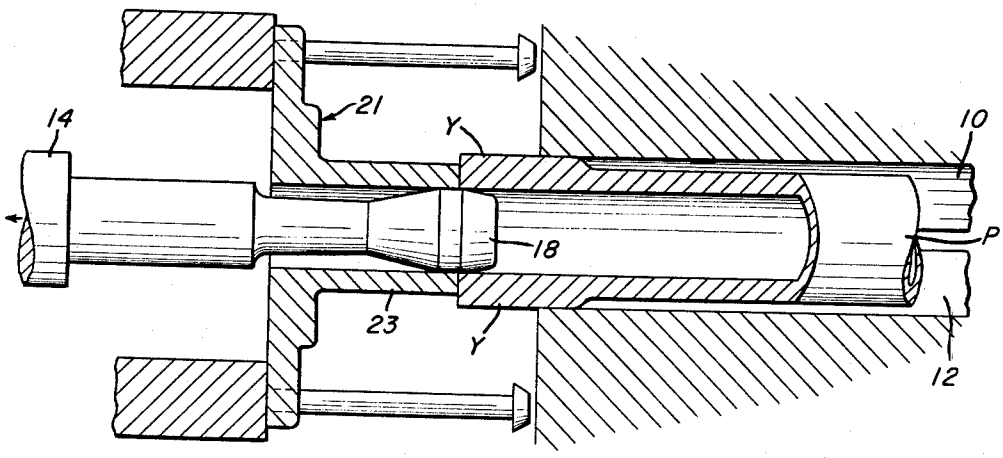

INVENTOR:
ANDREW F. KRITSCHER,

BY: Donald G. Dalton
his Attorney.

United States Patent Office

2,932,889

Patented Apr. 19, 1960

1

2,932,889

PIPE UPSETTING

Andrew F. Kritscher, Pittsburgh, Pa., assignor to United States Steel Corporation, a corporation of New Jersey

Application July 20, 1955, Serial No. 523,238

4 Claims. (Cl. 29—542)

This invention relates to an improved method and apparatus for externally upsetting pipe ends.

In the metal pipe art, "upsetting" refers to a forging operation in which the walls at the end of a pipe are made thicker for a length of several inches. Upsets can be either internal, external, or a combination of both. To form an external upset, metal must be forced into a closed cavity. Consequently external upsets are more difficult to form than internal upsets, where metal is forced into an open cavity. According to usual practice, a single external upsetting operation can increase the wall thickness to a maximum of about 1.4 times the original thickness, while a single internal upsetting operation can increase the thickness to about twice the original. To take advantage of the greater ease with which internal upsets are formed, it has been proposed to form external upsets by expanding internal upsets. However, previous practices of this type necessitate a large number of operations and different tools for each, and thus afford a negligible advantage over forming an external upset directly.

An object of the present invention is to provide an improved method and apparatus for externally upsetting a pipe end in which the end is first upset internally and then expanded with a single in-and-out movement of the same tool.

A further object is to provide an improved method of externally upsetting pipe ends in which the wall thickness can be increased by approximately twice the original thickness in a single operation.

A further object is to provide an improved upsetting apparatus which embodies a mandrel, a set of dies, and a yoke capable of forming an internal upset on an instroke and of expanding this upset to an external upset on an outstroke.

In accomplishing these and other objects of the invention, I have provided improved details of structure, a preferred form of which is shown in the accompanying drawings, in which:

Figure 1 is a longitudinal sectional view of an upsetting apparatus constructed in accordance with my invention in its starting position;

Figure 2 is a view similar to Figure 1, but in the position immediately preceding the internal upsetting operation;

Figure 3 is another similar view, but in the position immediately following the internal upsetting operation;

Figure 4 is another similar view, but in the position immediately preceding the expanding operation; and

Figure 5 is still another similar view, but in the position at the conclusion of the expanding operation.

Figure 1 shows a set of conventional internal upsetting dies **10** and **12** and the end portion of a pipe P mounted therein. Both dies are movable toward or away from the pipe, and when closed as shown, have a slight clearance with the outside of the pipe. The pipe is gripped against lengthwise movement rearwardly of the dies by conventional means not shown. It would also be possible to grip with the dies. The end portion of the pipe is previously heated to an appropriate forging temperature. A stationary frame **13** is mounted in spaced relation to the dies and carries a double acting power driven reciprocable ram **14** which is coaxial with the pipe.

2

A mandrel **15**, constructed in accordance with my invention, is fixed to the end of the ram **14**. The mandrel includes a cylindrical section **16** adjacent the ram, a section **17** of smaller diameter and preferably tapered slightly extending therefrom, and a head **18** at the extremity of the latter section. The maximum diameter of the head is slightly smaller than the inside diameter of the pipe to insure against forcing metal into a closed cavity. The head has a sloping planishing surface **19** which leads to the section **17** of smaller diameter. This surface slopes at about 7½° to 15° with respect to the horizontal. The diameter of the section **17** is sufficiently smaller than that of the pipe to leave an annular recess of greater volume than the internal upset to be formed. The length of this section approximately equals that of the upset.

Also in accordance with my invention, the frame **13** carries a pair of guide pins **20** on which an annular stripper yoke **21** is mounted for free sliding movement coaxial with the mandrel **15**. This yoke includes a base portion **22** adapted to abut the frame **13** and ram **14**, and a sleeve portion **23** adapted to abut the pipe end. The mandrel **15** extends through both portions of the yoke **21** and is freely movable with respect thereto up to the point where the base portion **22** abuts the ram **14**. It is seen that an equivalent structure would result if the pins **20** were attached to the frame of the dies **10** and **12** rather than to the frame **13**.

According to my upsetting method, a pipe P is heated to forging temperature and installed in the dies **10** and **12**. The dies are closed and the pipe is gripped at a remote location. Power is applied to the ram **14** to shove the mandrel **15** into the pipe bore, as shown in Figure 1. The stripper yoke **21** idly moves with the ram and mandrel until its sleeve portion **23** abuts the pipe end, as shown in Figure 2. Thereafter continued movement of the stripper yoke and mandrel forces metal of the pipe into the annular recess which surrounds the section **17** of the mandrel thus forming an internal upset X, as shown in Figure 3.

Next the dies **10** and **12** are opened and the pipe is released so that it is free to move lengthwise. Power is applied to the ram to move the mandrel in the reverse direction. The pipe and stripper guide move freely with the mandrel until the base portion **22** of the latter abuts the frame **13**, as shown in Figure 4. Thereafter the pipe and stripper guide are fixed against further movement. Continued movement of the ram and mandrel causes the planishing surface **19** of mandrel head **18** to force the internal upset X outwardly, and thus expands this upset into an external upset Y, as shown in Figure 5. The pipe is then removed from the apparatus and cooled.

From the foregoing description it is seen that my invention affords a simple method and apparatus for externally upsetting pipe in a single operation. The increase in wall thickness at the upset is comparable with that obtained in a single internal upsetting operation. There is no change of tools involved, but instead a single tool forms an internal upset on its instroke, and expands this upset to an external upset on its outstroke.

While I have shown and described only a single embodiment of my invention, it is apparent that modifications may arise. Therefore, I do not wish to be limited to the disclosure set forth but only by the scope of the appended claims.

I claim:

1. A method of externally upsetting the end portion of

a metal pipe comprising heating the end portion of a pipe to a forging temperature, moving a rigid mandrel into the pipe bore to form an internal upset, and withdrawing the same mandrel to expand the internal upset to an external upset.

2. A method of externally upsetting the end portion of a metal pipe comprising heating the end portion of a pipe to a forging temperature, retaining the pipe against lengthwise movement, moving an annularly recessed rigid mandrel into the pipe bore to form an internal upset with a single instroke of the mandrel, and withdrawing the mandrel to expand the internal upset to an external upset with a single outstroke of the same mandrel.

3. A method of externally upsetting the end portion of a metal pipe comprising heating the end portion of a pipe to a forging temperature, closing dies on the end portion of the pipe and retaining the pipe against lengthwise movement, moving an annularly recessed rigid mandrel into the pipe bore and an abutment against the end face thereof to form an internal upset with a single instroke of the mandrel, opening the dies, and withdrawing the mandrel to expand the internal upset to an external upset with a single outstroke of the same mandrel.

4. A method of externally upsetting the end portion of

a metal pipe comprising heating the end portion of a pipe to a forging temperature, closing dies on the end portion of the pipe and retaining the pipe against lengthwise movement, moving an annularly recessed rigid mandrel into the pipe bore and an abutment against the end face thereof to form an internal upset with a single instroke of the mandrel, opening the dies and releasing the pipe for lengthwise movement, withdrawing the mandrel and abutting the end face of the pipe to expand the internal upset to an external upset with a single outstroke of the same mandrel.

References Cited in the file of this patent

UNITED STATES PATENTS

1,295,430	Carlson	Feb. 23, 1919
1,325,073	Boyd	Dec. 16, 1919
1,566,645	Breeze	Dec. 22, 1925
2,027,406	Spatta	Jan. 14, 1936
2,053,975	Spatta	Sept. 8, 1936
2,146,461	Betterton	Feb. 7, 1939
2,548,702	Chamberlain	Apr. 10, 1952
2,728,135	Rockwell	Dec. 27, 1955