Feb. 13, 1934. M. A. ACHESON 1,947,179

ELECTRON DISCHARGE APPARATUS

Filed Feb. 21, 1929

Fig. 1.

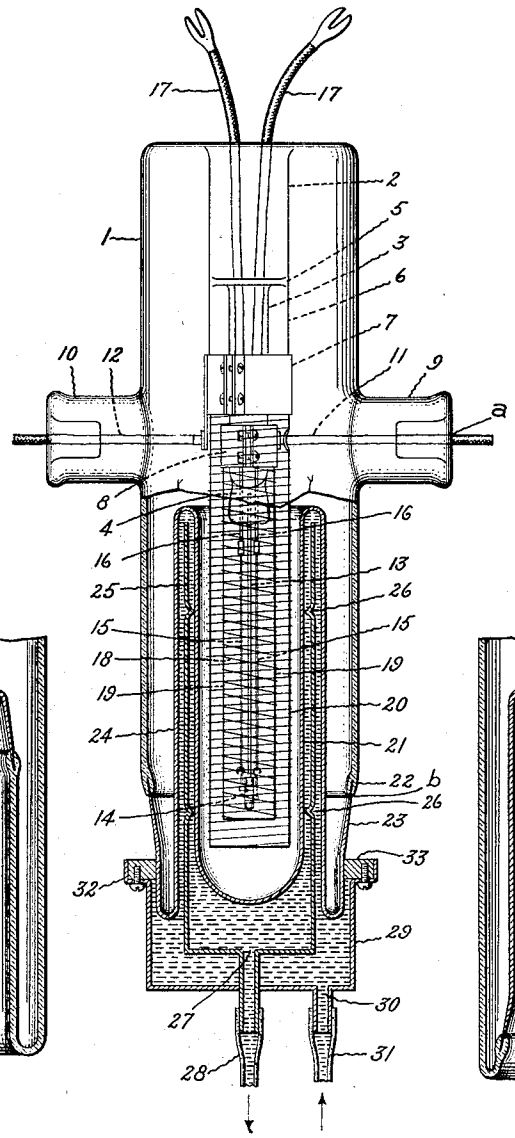

Fig. 3.

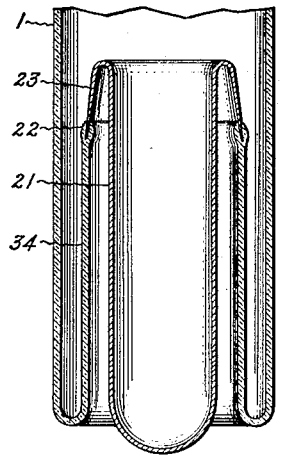

Fig. 2.

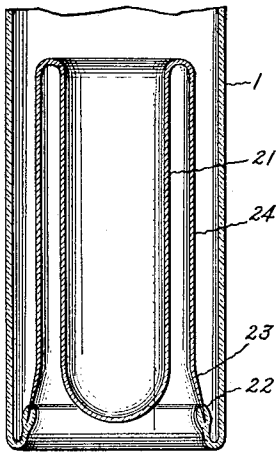

Inventor:
Marcus A. Acheson,
by Charles E. Tullos
His Attorney.

Patented Feb. 13, 1934 1,947,179

UNITED STATES PATENT OFFICE

1,947,179

ELECTRON DISCHARGE APPARATUS

Marcus A. Acheson, Schenectady, N. Y., assignor to General Electric Company, a corporation of New York

Application February 21, 1929. Serial No. 341,781

6 Claims. (Cl. 250—27.5)

The invention relates to thermionic devices and in particular to transmitting tubes of the power type.

In the design of power tubes employed as oscillators or amplifiers, it is found desirable to reduce interelectrode capacity or the effects thereof to a minimum, in order to operate at as low a wave length as possible. The term "interelectrode capacity" is intended to include the capacity residing in the tube between the electrodes, lead-in conductors or other metallic members which may give rise to uncontrolled feed-back energy or which may preclude the effective tuning of associated circuits to oscillations of extremely high frequency. Heretofore, there has been proposed the use of screen grids, also various other capacity neutralizing arrangements which, while effective to a substantial degree, nevertheless do not entirely remove or completely eradicate the undesirable reactive effects. The latter are particularly noticeable in the case of power tubes employed as amplifiers, oscillators or the like, which are called upon to generate or translate high frequency currents of considerable amplitude. In tubes of this character, the construction heretofore employed usually necessitated grid and anode elements, also lead-in conductors of much greater length than are actually needed from an operation standpoint and to this extent added to the internal capacity of the device and also to the inductance introduced into the circuits. In the prior art tubes, the portion of each electrode beyond the active surface serves simply as a combined support and lead-in conductor for the active portion and must be of a length sufficient to preserve the minimum insulation distance for the voltage employed, as measured along the glass envelope between the grid lead-in and the metal sealing cone which usually constitutes a portion of the anode. Furthermore, in these tubes it is customary to construct the entire anode as a rectilinear extension of the envelope so that in case the plate member is of considerable length the overall dimensions of the tube may be such as to require a supporting structure of special design for the tube which may occupy a great deal of space.

One of the objects of my invention is to devise a tube having a construction in which the length of the grid of the anode and of the respective lead-in conductors is reduced to a minimum without sacrificing in any substantial degree the length of insulation between the various charged members to the end that the capacity between the metallic members, also their inductance, and the overall length of the tube are minimized. A more general object is to improve the construction and operating characteristics of thermionic devices, particularly power tubes employed for transmission purposes. These objects are attained by a novel design of one of the electrodes specifically the anode, which takes the general form of a reentrant member. For a more complete understanding of the invention reference should be had to the accompanying drawing in which Fig. 1 is an elevational view partly in cross section of a tube embodying the improved anode while Figs. 2 and 3 represent modifications of the anode structure.

Referring to the drawing, numeral 1 designates an evacuated envelope, preferably of cylindrical shape, closed at one end by a flare seal and at the other end by an anode constructed in the manner described hereinafter. To the flare seal there is fused a reentrant stem 2 which is reduced in diameter to form the portion 3, terminated by a press 4. The stem 2 also carries by means of a ring seal 5, a glass cylinder 6 which is embraced by and forms a support for the grid clamp 7. There is a grid clamp 8 secured in any suitable manner to the glass portion 3; this clamp is for an additional grid as will be explained hereinafter. The envelope is formed with two oppositely directed arms 9, 10 through which are sealed lead-in conductors 11, 12 connected respectively to the grid clamps 7, 8. A rod 13 is sealed in the press 4 and has affixed to its lower end a piece of insulating refractory material 14 from which may be supported in any suitable manner, two V-shaped filament strands 15 (shown in edge view) terminating in lead-in conductors 16, 16. These conductors may also be fused in the stem and for convenience in making the connection thereto a pair of flexible cable wires 17, 17 may be provided. The grid clamp 8 supports an electrostatic control member in the form of a wire helix 18 wound about a plurality of stay wires 19, 19 which are arranged equidistantly about and secured to the clamp. A screen grid 20, connected to clamp 7, is of a construction similar to the control grid and is arranged between the latter and the anode 21. The purpose of the screen grid is to intercept the electrostatic lines of force which ordinarily would radiate from the control grid and the anode giving rise to undesirable capacity effects. The grid 20 usually extends a considerable distance beyond the control grid and is closed at the bottom in any suitable manner, the more effectively electrostatically to screen the latter.

The anode which constitutes the subject of the present invention, as illustrated in Fig. 1, takes the general form of a reentrant member in which the metal-to-glass seal may be brought down to the lower end of the anode. The seal consists of a hermetic union between the glass bead 22 and a metal sealing ring 23 which may be formed integral with the body of the anode in the manner shown; the sealing ring may be arranged in rectilinear relation with respect to the envelope as shown in Fig. 1. The anode proper is preferably of copper and comprises a double walled cylindrical member 24 of an approximately U-shaped cross section, having a length somewhat greater than the active length of the filament and grid electrodes. The inner anode wall is closed at the bottom preferably by a semi-spherical portion to form a chamber of suitable dimensions within which the electrodes may be positioned. In the space between the walls there is arranged a cylindrical partition 25 to form two compartments that are adapted to contain a cooling fluid such as water, oil or air. The proper position of the partition in the double walled portion of the anode may be maintained by one or more projections 26 which engage the exterior surface of the inner anode wall. In order to provide an inlet and outlet for the cooling fluid, thereby assuring thorough circulation by means of a pump if desired (not shown), the lower end of the partition cylinder is closed except for a small opening 27 which communicates with a piece of flexible tubing 28. The lower end of the anode is also closed by a casing 29 having an opening 30 which leads to a tubing 31. The casing 29 may be held in position with respect to the tube by a flange 32 secured to a ring 33 which fits tightly about the exterior surface of the anode at the base of the sealing cone. The cooling fluid may be pumped through the inlet 31 traveling up the outer side of the circular partition and then down through the inner compartment to the outlet 28 thereby offering a long path of contact with the anode, effectively to abstract heat.

It is evident that the minimum insulation distance as measured along the envelope between the points *a*—*b* which represent areas between which a considerable potential difference resides, is preserved notwithstanding a marked decrease in the overall length of the tube. It is apparent that the reentrant construction of the anode materially reduces the length of the anode and grid including the portion which serves as a support and lead-in conductor over the usual construction, thus minimizing interelectrode capacity effects and also enabling the screen grid completely to shield these electrodes from one another. The combined effect of the screen grid and improved anode construction renders the device capable of generating extremely high frequency oscillations when connected in appropriate circuits although it is to be understood that if desired, the screen grid may be omitted as may also, the arrangement for providing the cooling means.

Instead of forming the sealing ring as a rectilinear extension of the envelope shown in Fig. 1, the sealing ring may constitute a rectilinear extension of the anode. Thus in Fig. 2, the ring 23 is sealed in the bead 22 formed at the lower edge of the envelope which is turned inwardly for a relatively short distance and in a direction reverse to that of the main portion of the envelope. The anode proper which is integral with the sealing ring is reentrant with respect to the envelope as in the case of Fig. 1, and doubles back on itself to extend in the same direction as the envelope.

Fig. 3 is still another form which the anode may take in accordance with the principles of my invention. As shown in this figure, the outer metallic wall of the anode shown in the preceding figures is displaced by an extended portion 34 of the glass envelope which carries a bead 22 for sealing purposes. The seal in this case is located at the upper end of the anode instead of at the lower end as exemplified in the embodiments shown in Figs. 1 and 2. It will be understood that the grid and cathode electrodes may be mounted within the chambers formed by the anodes as in the case of Fig. 1 and if desired, the outer surface of each anode member may be cooled by a suitable fluid.

It will be noted that each of the anode constructions illustrated in Figs. 2 and 3 offers the same advantages as are set forth in connection with Fig. 1 with respect to reducing the length of the combined supporting members and lead-in conductors and hence decreasing interelectrode capacity, while preserving the minimum insulation distance between the grid lead and the sealing cone. It is evident that the invention is not predicated upon a particular length of the anode chamber, in fact, the anode may extend considerably beyond the end of the glass envelope or be shortened to form a hemispherical configuration, the positions of the electrodes which cooperate with the anode being modified accordingly.

What I claim as new and desire to secure by Letters Patent of the United States, is:

1. A thermionic device comprising an evacuated envelope closed by a metal member adapted to serve as an electrode, one portion of said member constituting a rectilinear extension of the envelope and another portion of said member being oppositely directed with respect to said one portion, said oppositely directed portion comprising a double-walled member adapted to receive a cooling fluid, and a partition mounted between the walls of said double-walled member for directing the flow of cooling fluid through said member.

2. An anode for a thermionic device comprising a plurality of cylinders joined together at one end, the space between the cylinders being adapted to contain a cooling fluid, a partition in said space for directing the flow of cooling fluid through the anode, one of the cylinders at the other end being terminated by a sealing ring which parallels the outer surface of the anode, and another of said cylinders at the said other end being closed and adapted to receive cooperating electrodes.

3. An anode for a thermionic device comprising a plurality of concentrically arranged members of closed perimeter joined at one end, the space between said members being adapted to receive a cooling fluid, one of said members at the other end being adapted to be sealed to an envelope and another of said members at the said other end being closed and adapted to receive cooperating electrodes, a partition mounted in said space between said members to constrain the cooling fluid into a circulatory path past the anode.

4. An anode for a thermionic device comprising a plurality of concentrically arranged members of closed perimeter joined at one end, the space between said members being adapted to

receive a cooling fluid, one of said members at the other end being adapted to be sealed to an envelope and another of said members at the said other end being closed and adapted to receive cooperating electrodes, a partition mounted in said space between said members to constrain the cooling fluid into a circulatory path past the anode, said partition being closed at one end except for a fluid opening and the outermost of the said concentrically-arranged members being closed at the corresponding end except for a fluid opening.

5. Thermionic apparatus comprising an evacuated envelope terminating at one end in a reentrant stem and at the other end solely in a metallic ring which extends in a direction rectilinear with respect to the envelope, an electrode joined integrally to said ring, the active surface of the electrode being closed at one end to provide a chamber, an electrode supported by said stem and arranged within said active chamber, a lead-in conductor attached to said last-mentioned electrode and sealed in the envelope whereby the insulation distance to voltage breakdown is measured along the envelope from the said conductor to the said ring, said electrode which is formed integral with the ring extending within the envelope in a direction opposite to that of the ring so as to reduce interelectrode capacity and inductance effects to a minimum while preserving the proper insulation distance.

6. Thermionic apparatus comprising an evacuated envelope terminating at one end in a reentrant stem and at the other end solely in a metallic ring which extends in a direction rectilinear with respect to the envelope, an anode joined integrally to said ring, the active surface of the anode being closed at one end to provide a chamber, filament and grid members supported by said stem and arranged within the active anode chamber, a lead-in conductor attached to the grid member and sealed in the envelope whereby the insulation distance to voltage breakdown is measured along the envelope from the said conductor to the said ring, said anode extending within the envelope in a direction opposite to that of the ring so as to reduce the length of anode and grid members to a minimum while preserving the proper insulation distance.

MARCUS A. ACHESON.