Aug. 9, 1938. H. J. L. FRANK ET AL 2,126,183

METHOD OF MAKING ELECTRICAL CONNECTERS

Filed June 24, 1935 2 Sheets-Sheet 1

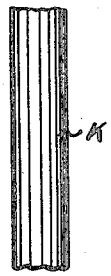

Fig. 1.

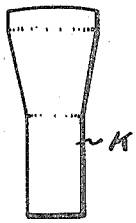

Fig. 2.

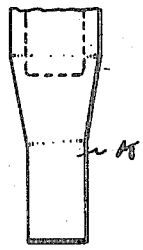

Fig. 4.

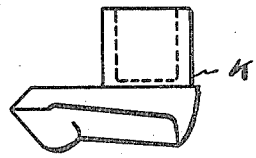

Fig. 6.

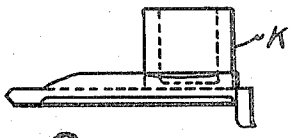

Fig. 9.

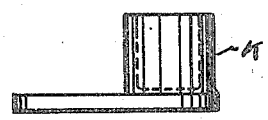

Fig. 12.

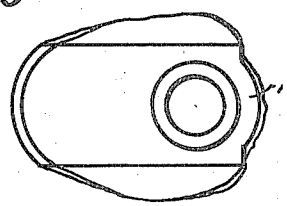

Fig. 10.

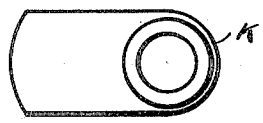

Fig. 13.

Fig. 14.

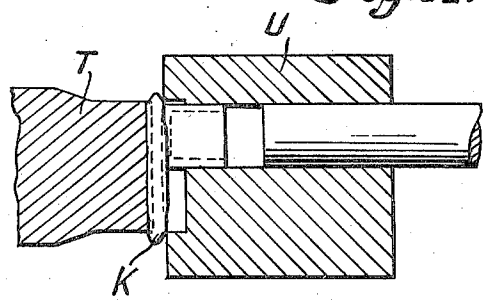

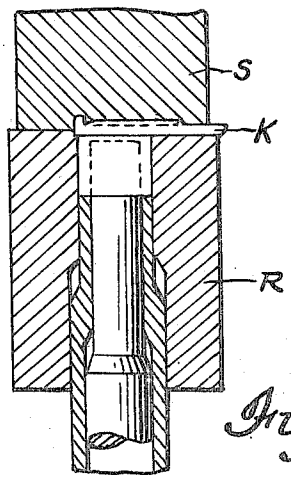

Fig. 11.

INVENTOR.
Harrison J. L. Frank &
BY Joseph A. Messing
Daniel G. Cullen.
ATTORNEY.

Aug. 9, 1938. H. J. L. FRANK ET AL 2,126,183

METHOD OF MAKING ELECTRICAL CONNECTERS

Filed June 24, 1935 2 Sheets-Sheet 2

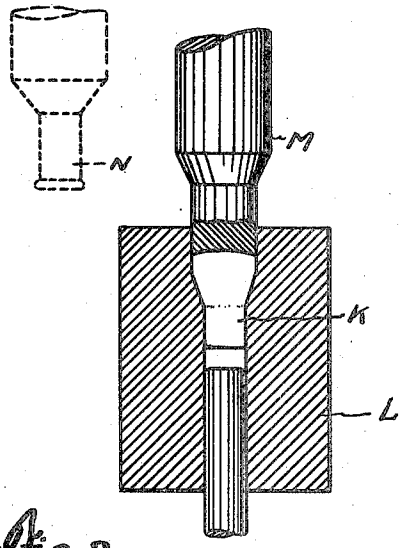

Fig. 3.

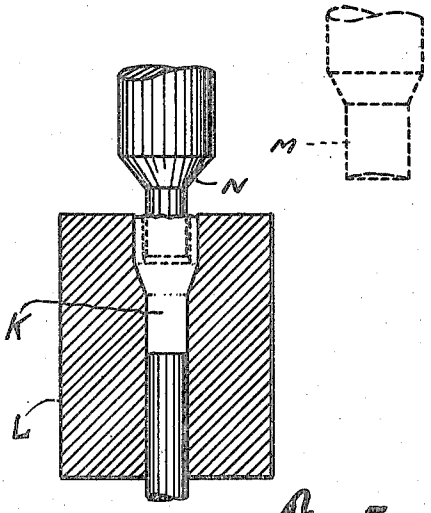

Fig. 5.

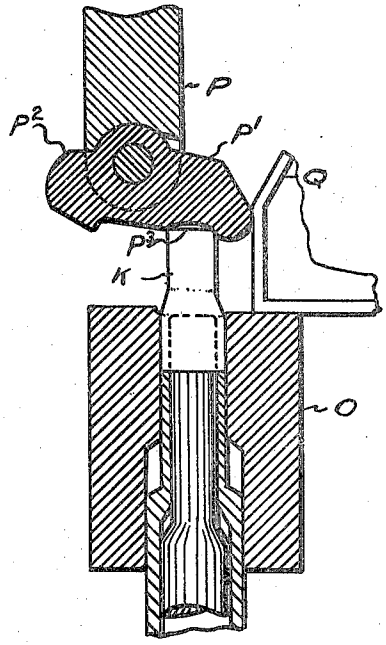

Fig. 7.

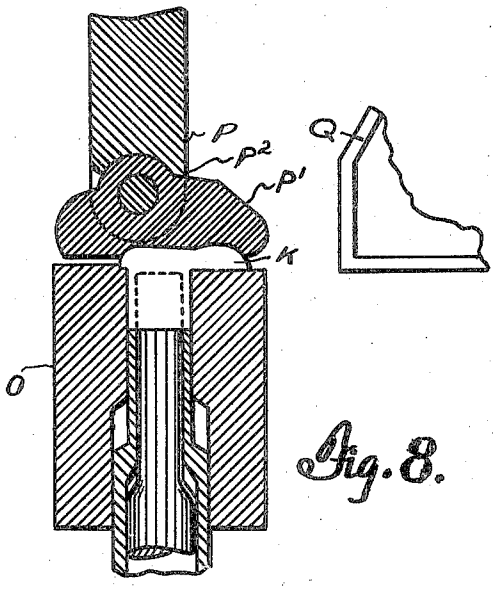

Fig. 8.

INVENTOR.
Harrison J. L. Frank
BY Joseph A. Messina
Daniel Sullen
ATTORNEY.

Patented Aug. 9, 1938

2,126,183

UNITED STATES PATENT OFFICE

2,126,183

METHOD OF MAKING ELECTRICAL CONNECTERS

Harrison J. L. Frank and Joseph A. Messing, Detroit, Mich.

Application June 24, 1935, Serial No. 28,116

4 Claims. (Cl. 29—155.55)

This application relates to a novel method for making devices, such as electrical connecters.

For an understanding of the details of the method of manufacture described herein, reference should be had to the appended drawings disclosing the various stages of such method. In these drawings,—

Fig. 1 shows a billet from which a one piece connecter blank is formed;

Fig. 2 shows the billet of Fig. 1 after it is given a first punching, in the die and with the punch of Fig. 3;

Fig. 4 shows the part of Fig. 2 after it is given another punching, in the die and with the punch of Fig. 5.

Fig. 6 shows the part of Fig. 4 after it is bent over and mashed down in the die and with the punch of Figs. 7–8;

Figs. 9–10 show the part of Fig. 6 after it is flattened down in the die and with the punch of Fig. 11.

Figs. 12–13 show the part of Figs. 9–10 after it is trimmed in the die and with the punch of Fig. 14.

A one piece electrical connecter, shown in Figs. 12–13, may be made from bar stock by the method herein shown in the following manner; a billet K (Fig. 1) is placed in the die L and punched with the punches M and N of Figs. 3 and 5 successively, first to fill the die and be dimensioned externally and to go into the shape of Fig. 2 and then to be stretched and extruded around the small end of punch N and go into the shape of Fig. 4, wherein it will have a cavity which is to form the cavity of the connecter and wherein it has an axial shank or extension which is to form the strap of the connecter.

Thereupon the part of Fig. 4 is mashed down into the shape of Fig. 6 in the die O and with the punch P of Figs. 7–8, the movement of the punch P being guided by the movable rigid guide Q. It is observed that when punch P descends, part P′ tilts back and forces the end of part K to the right (Fig. 7) pivoting at P2 off center of part K. Then guide Q moves to the left as shown to force part P′ down so that its cup P3 fits right over the end of part K, after which part Q returns to clear the part P′. Then the extension part is flattened down into the shape of Figs. 9–10 in the die R and with the punch S of Fig. 11, after which the roughage or excess is trimmed off by a trim punch T cooperating with a trim die U, Fig. 14, to provide the connecter blank of Figs. 12–13.

The cup of the blank may be appropriately cross drilled and tapped and the strap may be pierced.

We claim:

1. A method of making a cup shaped part having an eccentric strap at and arranged in the plane of its closed end which comprises striking a billet of rod stock axially to enlarge one end of the billet, again striking the enlarged end axially, this time with a punch, to form an axial cup forming depression in such enlarged end, then pushing against the other end of the billet axially and laterally, with a compound motion, to mash and flatten and bend over such other end and form it into a strap transverse to the axis of the cup and eccentric thereof.

2. A method of making a tube having one end closed and having an eccentric strap at and arranged in the plane of its closed end which comprises striking a billet of rod stock axially to enlarge one end of the billet, again striking the enlarged end axially, this time with a punch, to form an axial tube forming depression in such enlarged end, then pushing against the other end of the billet axially and laterally, with a compound motion, to mash and flatten and bend over such other end and form it into a strap transverse to the axis of the tube and eccentric thereof.

3. A method of making a cup shaped part having an eccentric strap at and arranged in the plane of its closed end which comprises striking a billet of stock axially to enlarge one end of the billet, again striking the enlarged end axially, this time with a punch, to form an axial cup forming depression in such enlarged end, then pushing against the other end of the billet axially and laterally, with a compound motion, to mash and flatten and bend over such other end and form it into a strap transverse to the axis of the cup and eccentric thereof, and finally trimming such strap by striking it with a die against a die block, the die having the desired shape for the strap.

4. A method of making a tube having one end closed and having an eccentric strap at and arranged in the plane of its closed end which comprises striking a billet of rod stock axially to enlarge one end of the billet, again striking the enlarged end axially, this time with a punch, to form an axial tube forming depression in such enlarged end, then pushing against the other end of the billet axially and laterally, with a compound motion, to mash and flatten and bend over such other end and form it into a strap transverse to the axis of the tube and eccentric thereof, and finally trimming such strap by striking it with a die against a die block, the die having the desired shape for the strap.

JOSEPH A. MESSING.
HARRISON J. L. FRANK.