Sept. 1, 1931. B. D. GREENLAW 1,821,011

RIP STRING ENVELOPE

Filed June 13, 1931

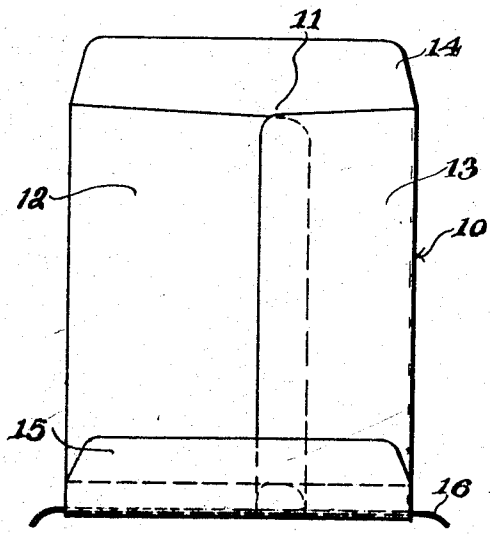

Fig. 1.

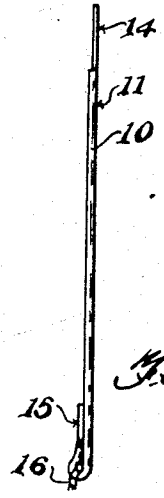

Fig. 2.

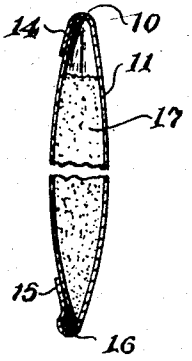

Fig. 3.

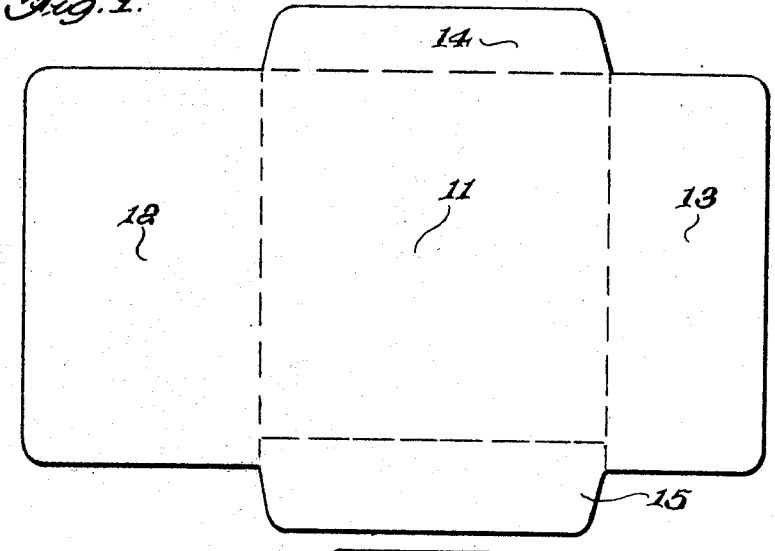

Fig. 4.

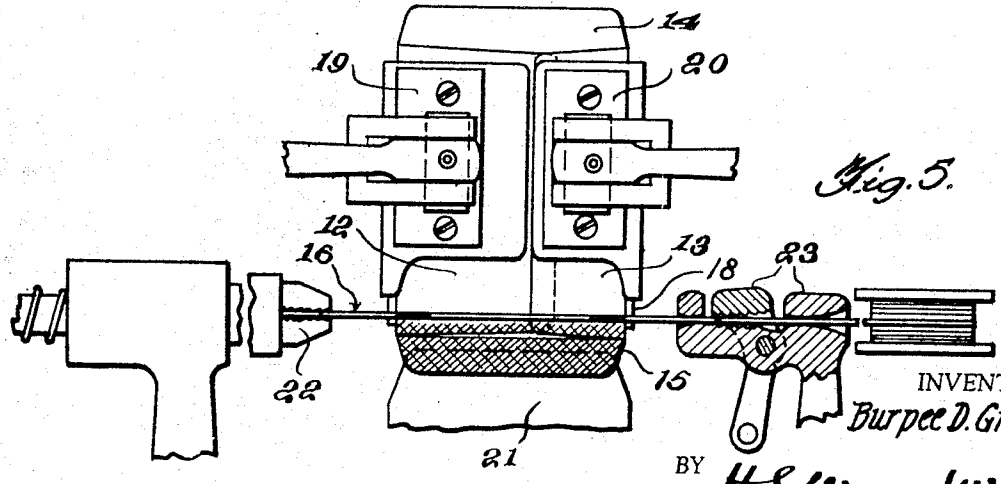

Fig. 5.

INVENTOR:
Burpee D. Greenlaw,
BY H. L. Woodward,
ATTORNEY.

Patented Sept. 1, 1931

1,821,011

UNITED STATES PATENT OFFICE

BURPEE D. GREENLAW, OF FITCHBURG, MASSACHUSETTS, ASSIGNOR TO THE BROWN BAG FILLING MACHINE COMPANY, OF FITCHBURG, MASSACHUSETTS, A CORPORATION OF MASSACHUSETTS

RIP STRING ENVELOPE

Application filed June 13, 1931. Serial No. 544,211.

The invention relates to envelopes for packaging articles and goods of various kinds, in which a rip string is incorporated, and particularly has for an object to provide an envelope specially suited to contain food products in such manner that a complete sealing of the contents may be attained, using simple paper stock or the like, without the effectiveness of the security of the package being affected by the inclusion of a simple straight strand rip cord opener, there being required no complicated convolutions in the cord, nor multiple folding of the envelope required to effect this complete seal while retaining the advantages of the simple straight cord. On this account, my envelope is peculiarly desirable for putting up samples of powders or other pulverized materials, and for packaging the unit materials for individual servings of food and beverages. It has been used for enclosing cocoa for a cup of beverage, with eminent success and satisfaction. In this kind of use it makes a strong appeal to the housewife's sense of cleanliness and purity to know that the cord and the attaching glue are entirely without the container as originally prepared and away from the food contents. In addition to safety, the device obviates liability of peculiar or unpleasant flavors being imparted to the foods by the adhesive or the string.

A special object of the invention is to provide means which will cleanly sever the container so that the contents may be discharged with a minimum of diversion and spilling. This is of great importance in packages of pulverulent materials.

It is also an aim to so form the package that, while the severing strand is out of the contents space in the package, there is a minimum liability of adhesion between the opposed walls of the envelope at the severed edge due to the need for using adhesive adjacent the extremities of these walls to afford a tight seal.

It is a further aim to present an envelope especially suited to be filled in automatic machines known as the Brown bag filling machine based on the patent to Cummings, No. 539,171, the patent to Barter, No. 1,164,975 and others.

The invention involves additional objects, advantages and features of invention, partly residing in the structure and arrangement of parts, and the method pursued in making the article, as will be understood from the following description and accompanying drawings, wherein

Figure 1 is a back view of the envelope embodying my invention,

Figure 2 is a lateral edge view of the envelope.

Figure 3 is a longitudinal sectional view of the envelope.

Figure 4 is a plan of the blank for the envelope.

Figure 5 is a back view of the envelope in the first stage of manufacture.

These is illustrated an envelope 10, formed customarily of paper, such as "glassine", a translucent or semi-transparent stock, although other fabrics are applicable to use therefor. The blank for the envelope comprises a face area or front wall area 11, the boundaries of which indicate the creases on which the flaps are folded, a large side flap 12, a narrow side flap 13, a top flap 14 and a bottom tongue 15. The side flaps are adapted to overlap slightly so that they may be secured together therebetween to form a back wall, as shown in Figure 1. It is important to note that the side flaps extend at the bottom longitudinally beyond the area 11 and when they are folded in and secured the article comprises substantially a flattened tube with the top flap 14 and tongue 15 laid flat therewith as continuations of the front wall. In the next operation, a cord or string 16 is coated with adhesive on a part, and then, while the flattened tube is laid upon a suitable support, the cord is held taut across and upon the tube as a clamp, on a line at right angles to the longitudinal axis of the tube and near one end of the tube, and slightly inward of the ends of the overlapped side flaps 13 and 12. The adjacent projecting extreme exterior end portions of the side flaps and the tongue 15 are then coated with adhesive and folded inward over the string while the latter is held

taut, the string thus serving as a former or holder and creaser in manufacture at the same time that it becomes incorporated in the envelope as a permanent part thereof for use in opening the package when the contents are required. This has been found of great advantage in manufacture of the envelope, as I have found it possible to remove the clamping member from the envelope machine and provide means to hold my rip cord taut upon the envelope at the line of the fold, in place of such clamping member while the end fold is made, and then sever the cord as desired. The other end of the tube with the top flap 14 is left open. The ends of the cord are then cut off so that a short end portion projects at one or each side of the envelope.

The envelope is now ready for filling, which is done on a familiar automatic machine in which a measure after being filled is moved to discharge through a funnel which has been inserted into the open end of the envelope. The flap 14 is then gummed in the filling machine and folded down and the package delivered from the machine.

There is a peculiar advantage in my method of folding the bottom of the envelope over the cord, lying in the fact that the crease there is more rounded than where it is clamped by mechanical grippers, pressers and the like. There is also obviated much danger of damage to the envelope by plungers and other mechanical devices. In addition, contrary to the condition involved in envelopes where the cord is laid in the crease of a single thickness of paper, there is a minimum liability of abrasion of the envelope on a line over the cord by the cord pressing the paper against objects and surfaces which would tend to wear away the material excessively. In the present instance the two thicknesses tend to oppose sharp bending aroud the cord, so that material on a very narrow zone over the cord is not caused to sustain the entire pressure of abutting materials.

In this construction of envelope it will be noted that the container proper has front and back walls (Fig. 3) which converge below the contents and lie pressed tightly together, and that the cord 16 is lying immediately against one side of these converged and contacting parts, without any excess of paper or other material between the cord and the immediate contents-retaining walls of the package. The application of adhesive to the cord may be varied as desired. The amount applied is only sufficient to act as an adhesive between the outer fibers of the cord and the immediately contacting paper of the envelope. If the adhesive is applied only for short distances on the cord at intervals or adjacent the side edges of the envelope only, the effect will be the same in opening manipulation, as described below.

To open the package, a projecting end of the cord is grasped in one hand while the adjacent corner of the envelope is grasped in the other and the cord drawn longitudinally away from the bottom of the package. The cord thus tears through both walls of the package, completely severing them evenly throughout the width of the package if the cord is pulled entirely away. By having a portion of both the front and back walls of the envelope extend around the cord at the fold, the possibility of adhesive working back between them into the contents space is obviated, and a complete freedom of the two sides at the severed edges thus insured. The cord used is preferably a good cotton or linen thread, but other materials may be used, including metal, fibre, or otherwise.

If only the tongue 15 were folded over and secured upon the cord, there would be a certain amount of cementing of the front and back walls of the envelope together by the adhesive applied to the string, preventing proper opening of the package. Consequently, folding both front and back portions a distance from the ends of the back wall portion of the flattened tube, insures against the possibility of such adhesion as the adhesive cannot get from the cord into the envelope.

The holding of the string taut over the envelope and the folding of the envelope thereover may be done manually, but it is preferably done by a suitable machine. In Figure 5 the envelope is shown upon a support or platen 18 of such a machine while the side folders 19 and 20 have been operated to close the side flaps 12 and 13, the top flap being left extended so that no crease is formed thereat. The bottom flap or tongue 15 is shown as having been gummed, and a back folder 21 is shown, adapted to fold the lower part of the envelope over the string 16 while the latter presses against the envelope so as to cause the formation of the bend of the envelope fabric directly against and around the string. The string holds the envelope in place by pressing down upon the platen, and prevents displacement of the end portion of the envelope during the final folding operation. The string is held by grippers 22 and 23, and by which it is pressed upon the stock, after being drawn from the spool 24.

It is an important advantage of my invention that, while having a rip string incorporated in an envelope with the string exposed for ready observation and grasping, still, the contents may be completely sealed. In prior envelopes where a string is left so exposed, it has extended from within the container proper, and usually there is some clearance around the string where it passes out of the envelope so that pulverulent materials could escape. My envelope is therefore

specially suitable to packaging of such materials.

I claim:—

1. An article for the purposes described comprising a fabric container having front and back walls in contact at a line of fold and extending beyond said line, a flexible rip strand cemented to the outside of one wall of the container at said line and having a part for manipulation, the wall parts extending beyond said line, being folded over the strand and secured to the wall of the container immediately thereadjacent, whereby the strand is held immediately against the container wall at one boundary, and when pulled will sever both front and back walls of the container at the line of fold.

2. The method of forming a container of the character described consisting in producing a flattened tube, coating a flexible severing member with adhesive, disposing the flattened tube upon a support, holding the severing member taut against the side of the tube in a line across one end of the tube as a clamp so as to hold the tube against the support at said line, bending the projecting end part of the tube against and around the taut severing member and securing the folded end against the adjacent wall of the container.

3. A container of the character described comprising a blank of flexible manually tearable material folded to form a sealed contents space, and having at least one infolded edge-closing part secured to the body of the container a distance from the fold, a flexible rip strand of stronger material incorporated upon an outside face of the container wall exterior to said sealed space on a line between said fold and the line of securement of said infolded part.

4. A container of manually tearable material having front and back walls meeting at and both extending beyond a line of fold forming one edge boundary of the container, at least one of the infolded wall portions being secured to the body of the container beyond the fold, and a rip string at the infolded portion of the container outward of the fold, and spaced from said secured part.

In testimony whereof I affix my signature.

BURPEE D. GREENLAW.