Aug. 5, 1941. J. W. SCHMID 2,251,426

SYSTEM FOR SUPPLYING FEED WATER TO BOILERS

Filed March 8, 1940 3 Sheets-Sheet 1

Fig. 1.

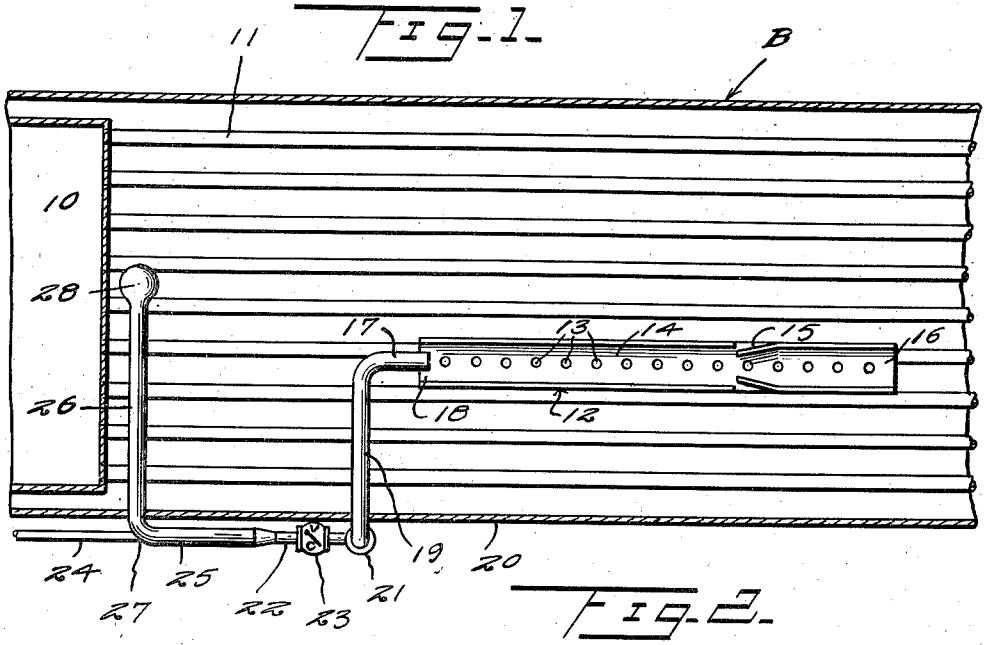

Fig. 2.

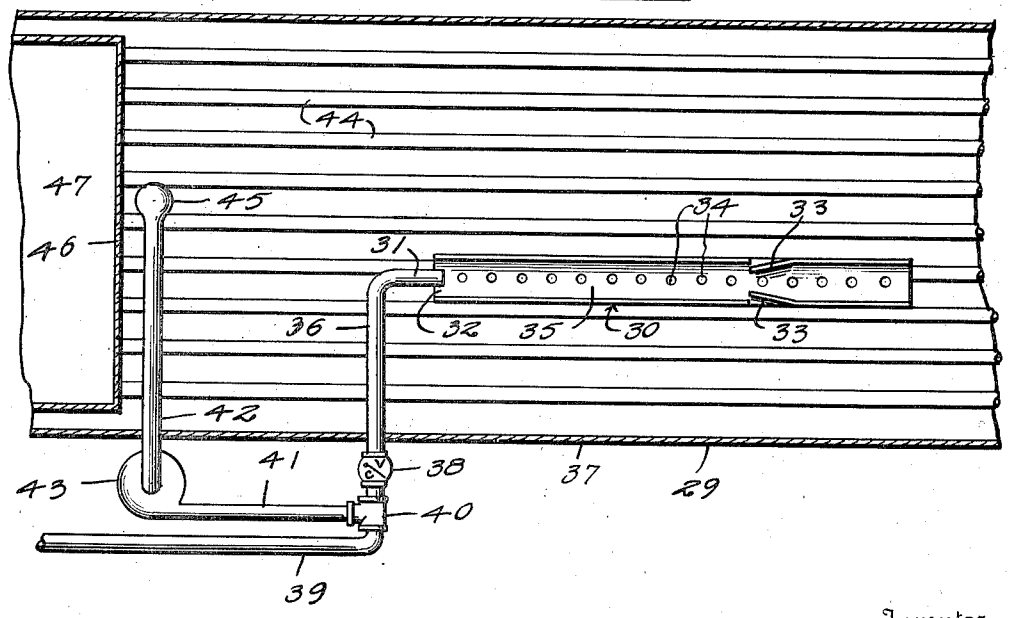

Inventor

JULIAN W. SCHMID

By Kimmel & Crowell

Attorneys

Aug. 5, 1941. J. W. SCHMID 2,251,426

SYSTEM FOR SUPPLYING FEED WATER TO BOILERS

Filed March 8, 1940 3 Sheets-Sheet 2

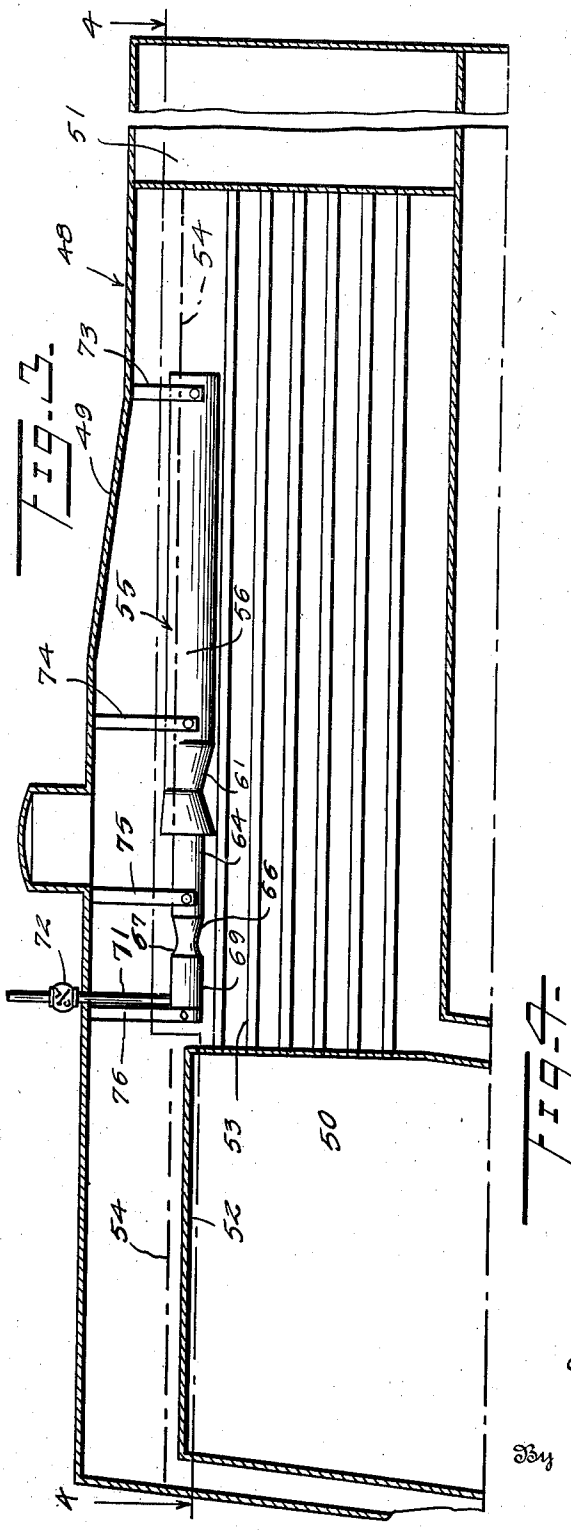

FIG. 3.

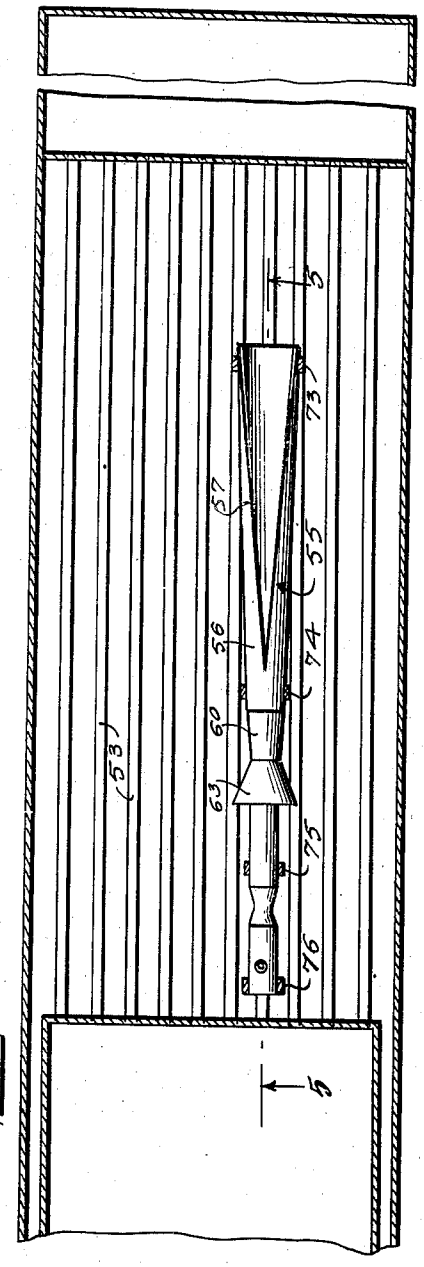

FIG. 4.

Inventor

JULIAN W. SCHMID

By Kimmel & Crowell

Attorneys

Aug. 5, 1941. J. W. SCHMID 2,251,426

SYSTEM FOR SUPPLYING FEED WATER TO BOILERS

Filed March 8, 1940 3 Sheets-Sheet 3

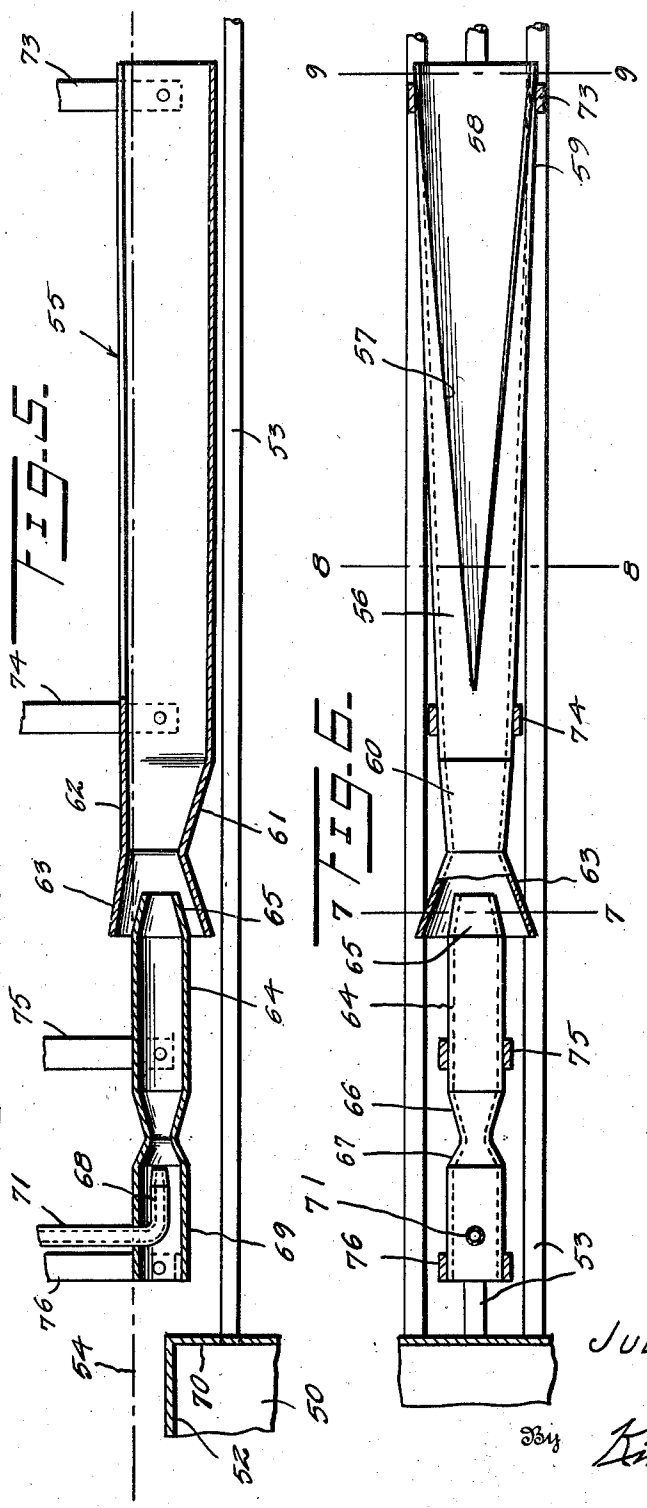

Fig. 5.

Fig. 6.

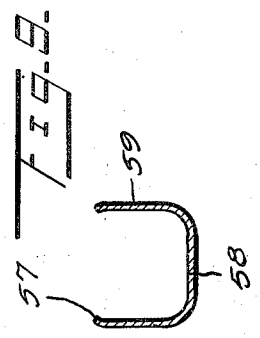

Fig. 8.

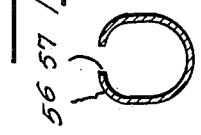

Fig. 4.

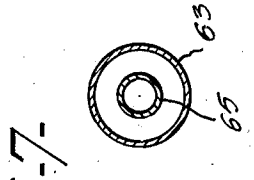

Fig. 7.

Inventor

JULIAN W. SCHMID

By Kimmel & Crowell

Attorneys

Patented Aug. 5, 1941

2,251,426

UNITED STATES PATENT OFFICE

2,251,426

SYSTEM FOR SUPPLYING FEED WATER TO BOILERS

Julian W. Schmid, Springfield, Mo.

Application March 8, 1940, Serial No. 323,029

7 Claims. (Cl. 122—414)

This invention relates to steam boilers and more particularly to a means for preventing pitting within the boiler. This invention is a continuation-in-part of my copending application, Serial No. 253,665, for Prevention of pitting of steam boilers, filed January 30, 1939.

An object of this invention is to provide an improved system and means for discharging feed water into the boiler to thereby raise the pH of the feed water within the boiler so as to substantially eliminate pitting.

Another object of this invention is to provide a system and means for discharging feed water into a boiler whereby the feed water is mixed with a greater portion of boiler water before the feed water is finally discharged into the boiler, and at the same time the temperature of the feed water is raised through commingling with the boiler water.

Under recognized principles of water treatment for boiler use there is an excess of alkalinity over hardness or scale forming salts. When the water is properly treated, the hardness that remains in the feed water is precipitated in the boiler in the form of a soft sludge that does not adhere to the boiler parts and does not form scales. The excess alkalinity concentrates in the boiler and at the higher temperature inside the boiler part of the carbonate excess is converted into caustic soda. In a boiler carrying 200 lbs. gauge pressure, this carbonate excess continues until 75 or 80% is caustic soda and 20 or 25% is sodium carbonate. While it is possible to treat water for boiler use and raise its pH value above the pitting point before it enters the boiler, thus preventing pitting, this is not always practical or even desirable, as when water with low hardness and dissolved solids and low pH is treated with enough chemical to correct the low pH before it enters the boiler, the concentration inside the boiler increases to a point where it interferes with the proper operation of the boiler, causing foaming and danger of caustic embrittlement of the boiler parts. With this invention only a moderate excess of alkalinity over hardness is maintained in the feed water, and the pH is raised above the pitting point by mixing it with the boiler water containing caustic soda. This is done by the CO_2, and the CO_2 liberated by the decomposition of bicarbonates in the feed water readily combines in the pipe and trough of this device with the caustic soda of the boiler water forming normal sodium carbonate. This normal carbonate is discharged from the trough into the boiler where it is slowly converted until 75 or 80% is caustic soda. Any dissolved oxygen that may be in the feed water is driven off in the trough and is carried from the boiler with the steam. In the ordinary method of putting feed water into a boiler, especially where there is a small amount of circulation of water in the boiler, as in the case of a locomotive when it is standing still and the pH of the feed water is below the pitting point, the mixture of the feed water in the boiler water is not sufficient to prevent pitting without using excessive treatment. This is shown by the fact that when there is pitting in a boiler most of it is near the point where the feed water enters the boiler and in the path and direction of circulation of the feed water after it enters the boiler. As the feed water mixes with the boiler water, the pH is raised and the pitting diminishes. This invention by thoroughly mixing the boiler water with the feed water uses the caustic soda of the boiler water to raise the pH of the resulting mixture above pitting point before it comes in contact with the metal parts of the boiler.

A still further object of this invention is to provide a system and means which will greatly reduce foaming. This will result from the calcium and magnesium of the incoming feed water being precipitated as calcium carbonate and magnesium hydroxide more rapidly and completely by the higher pH value of the mixture and in the presence of recirculated sludge, already in the boiler water so that a better floc is obtained. Also the nearly uniform mixture of chemical compounds throughout the boiler and the uniform temperature of the boiler water will allow a higher concentration of dissolved solids in the water thus causing less foaming.

A further object of this invention is to provide a system and means whereby the dissolved oxygen and the CO_2 may be discharged into the steam above the water level so that the oxygen and the CO_2 gas may be taken from the boiler with the steam.

To the foregoing objects and to others which may hereinafter appear, the invention consists of the novel constructions, combination and arrangement of parts as will be more specifically referred to and illustrated in the accompanying drawings wherein is shown an embodiment of the invention, but it is to be understood that changes, variations and modifications may be resorted to which fall within the scope of the invention as claimed.

In the drawings:

Figure 1 is a fragmentary horizontal sectional

view of a boiler structure having a device constructed according to an embodiment of this invention mounted therein.

Figure 2 is a similar view by showing a modified form of structure to prevent the pitting in the boiler.

Figure 3 is a fragmentary vertical section of a boiler embodying another modification of this invention.

Figure 4 is a fragmentary sectional view taken on the line 4—4 of Figure 3.

Figure 5 is an enlarged sectional view taken on the line 5—5 of Figure 4.

Figure 6 is a top plan partly in section of the structure shown in Figure 5.

Figure 7 is a sectional view taken on the line 7—7 of Figure 6.

Figure 8 is a sectional view taken on the line 8—8 of Figure 6.

Figure 9 is a sectional view taken on the line 9—9 of Figure 6.

Referring to the drawings and first to Figure 1, the character B designates generally a boiler structure having a fire box 10 at one end and a plurality of tubes 11 which are connected at one end to the fire box and which communicate at opposite ends with the usual smoke box.

In order to provide a means whereby the incoming feed water may be mixed with boiler water prior to the discharge of the feed water into the boiler, I have provided a trough generally designated as 12 which is positioned within the boiler B at a point above the uppermost of the tubes 11 and with the lower portion of the trough 12 disposed slightly above the uppermost of the tubes 11. In other words, the trough 12 is partly disposed within the boiler water and a portion of the trough 12 projects upwardly above the normal water level. This water level is slightly above the top of the crown sheet which is positioned above the fire box 10. The trough 12 comprises a bottom wall 14 which is provided with a plurality of longitudinally spaced apart openings or holes 13. The specific construction of the trough 12 is more clearly shown in my copending application, Serial No. 253,665. The trough 12 is open at each end and at a point between the ends thereof the trough 12 is provided with opposed and inwardly projecting by-pass members 15. These by-pass members 15 are disposed in rearwardly convergent relation and are adapted to by-pass a quantity of the water in the trough into the boiler water. In this manner the entire amount of feed water moving lengthwise of the trough 12 will not be discharged over or beyond the forward or discharge end 16 of the trough 12.

A discharge nozzle 17 is positioned within the boiler B and extends partly into the intake end 18 of the trough 12. The discharge nozzle 17 is adapted to discharge the incoming feedwater and a quantity of boiler water, as will be hereinafter described in the trough 12 so that the mixture of feed and boiler water will move lengthwise of the trough 12 in the same direction as the circulation of boiler water within the boiler B.

The nozzle 17 is connected to a pipe 19 which extends through a wall 20 of the boiler B and the pipe 19 is connected at its outer end to a coupling 21. A pipe 22 is connected to the coupling 21 and a rearwardly closing check valve 23 is interposed in the pipe 22. A feed water pipe 24 is connected at its forward end to an enlarged pipe 25 which is connected to the pipe 23. Preferably the feed pipe 24 is constructed in the form of a nozzle which is disposed within the pipe 25 so that when the feed water is discharged from the pipe 24 into the pipe 25 a suction will be formed in the pipe 25. A boiler water pipe 26 is connected at one end to the pipe 25 at a point exteriorly of the boiler B, the pipe 26 being connected to the pipe 25 by a coupling 27. The inner end of the boiler water pipe 26 terminates in a downwardly opening suction head 28 which is adapted to be disposed slightly below the normal water level in the boiler B so that the suction formed in the outer pipe 25 will cause the boiler water to be drawn inwardly through the head 28, through the pipe 26 and then be mixed with the feed water in the mixing pipe or tube 25. The rearwardly closing check valve 23 will prevent any water beyond the check valve to flow rearwardly thereof through the pipe 22.

Referring now to Figure 2, the numeral 29 designates generally a boiler structure similar to that shown in Figure 1 and the numeral 30 designates a trough which is positioned within the boiler 29, the details of the trough 30 being similar to the details of the trough 12. A nozzle 31 extends into the intake end 32 of the trough 30 and is adapted to discharge a mixture of boiler and feed water into the trough 30 so that the direction of movement of the incoming water in the trough 30 will be the same as the direction of circulation of the boiler water in the boiler 29. The trough 30 is provided with by-pass members 33 forwardly of the rear end 32 thereof and a plurality of bottom openings 34 are provided in the bottom wall 35 of the trough 30. This trough 30 has the lower portion thereof projecting into the boiler water and the open upper portion thereof extends above the normal water level. In this manner any dissolved oxygen or CO_2 gas rising from the water in the trough 30 will be mixed or commingled with the steam so that this dissolved oxygen and CO_2 gas will be carried out of the boiler with the steam. The nozzle 31 is connected to a pipe 36 which extends through a wall 37 of the boiler 29 and a check valve 38 is connected to the pipe 36 exteriorly of the wall 37. The check valve 38 is a rearwardly or outwardly closing valve so that the pressure within the boiler 29 will not cause the water in the pipe 36 to flow outwardly.

A feed water pipe 39 is connected to a T-coupling 40 which is connected at one side to the pipe 36 outwardly of the valve 38. A boiler water pipe comprising pipe sections 41 and 42 is connected to the coupling 40 and the two pipe sections 41 and 42 are connected to pump 43. The pump 43 is adapted to be operated in any suitable manner and is adapted to force boiler water to flow through the pipe sections 42 and 41 to the coupling 40 in which the boiler water is mixed with the incoming feed water from the pipe 39. The pipe section 42 extends inwardly through the wall 37 above the uppermost of the tubes 44 in the boiler 29 and the pipe 42 terminates at its inner end in a downwardly directed suction head 45. The suction head 45 is positioned closely adjacent the forward wall 46 of the fire box 47 and terminates slightly below the normal water level so that when the pump 43 is operated the boiler water will be withdrawn through the suction head 45 and discharged into the coupling 40 where the boiler water is mixed

with the incoming feed water and forced inwardly through the mixing pipe 36 and discharged from the nozzle 31 into the trough 30. By using a pump 43 any desired proportion of boiler water may be withdrawn from the boiler 29 for mixture with the incoming feed water. In this manner the incoming feed water will be heated by the boiler water to the desired degree so that when the combined mixture of boiler and feed water is discharged into the trough 30 the temperature of this mixture will be only slightly below the temperature of the water within the boiler 29.

The provision of the openings 34 in the trough 30 will permit some steam generated below the trough 30 to enter through the bottom wall 35 thereof so that the temperature of the mixture of boiler and feed water will be raised thereby before this mixture finally enters the boiler water.

Referring now to Figures 3 and 8, inclusive, the numeral 48 designates generally a conventional boiler structure embodying an outer shell or wall 49, a fire box 50 at one end thereof and a smoke box 51 at the other end. A crown sheet 52 is positioned over the top of the fire box 50 and a plurality of tubes 53 communicate the fire box 50 with the smoke box 51. The dot and dash line indicated by the numeral 54 designates the normal water level of the water in the boiler 48.

A trough or mixing member 55 is disposed within the boiler 48 and comprises an elongated tubular body 56 which as shown in Figure 4 is flared forwardly and is provided in its upper side with a V-shaped or flared opening 57. As shown in Figures 8 and 9, the tubular member 56 is gradually spread out so that at the forward end thereof the tubular member 56 assumes the configuration of a U having a substantially flat bottom wall 58 and vertical side walls 59. The forward end of the tubular member 56 has a rearwardly reducing extension 60 which may be formed integrally therewith and which forms a substantial Venturi tube. This Venturi member 60 is preferably formed with an upwardly inclined lower wall 61 as shown in Figures 3 and 5 and a substantially horizontal upper wall 62. A funnel-shaped or frusto-conical intake member 63 is connected at its apex to the reduced rear end of the mixing member 60 and this funnel-shaped member 63 has only a very slight portion thereof projecting above the water level 54 as shown more clearly in Figure 5.

A second mixing tube 64 is disposed rearwardly of the intake member 63 and is of a substantially smaller diameter than the rear diameter of the intake member 63. The mixing tube 64 at its forward end is provided with a reduced nozzle 65 which is positioned within the intake member 63 as shown in Figures 4 and 5. The rear end of the mixing tube 64 is provided with a reduced portion 66 which merges into a rearwardly flared portion 67 forming an intake mouth. The intake mouth or member 67 and the reduced portion 66 form a rear Venturi tube and a feed water discharge nozzle 68 is disposed axially of the intake member 67. The nozzle 68 is disposed within an intake tube 69 which extends rearwardly of and communicates with the intake member 67. The rear end of the intake tube 69 terminates at a point closely adjacent the forward wall 70 of the fire box 50 and this intake tube 69 is positioned substantially entirely below the normal water level 54. An intake feed pipe 71 is connected to the nozzle 68 and at right angles to the intake tube 69. A check valve 72 is connected to the pipe 71 exteriorly of the top wall 49 of the boiler 48 and the feed pipe 71 is adapted to be connected to a suitable source of feed water supply. The forward mixing member 55 is supported within the boiler 48 by means of a plurality of brackets or suspending bars 73 and 74 which are secured to the boiler wall 49 and to the mixing member 55. The mixing tube 64 and the intake tube 69 are supported horizontally in the boiler 48 by means of depending brackets or bars 75 and 76, respectively.

During the normal operation of the boiler 48, the water circulates from the crown sheet 52 forwardly in the direction of the smoke box 51. The feed and boiler water mixing structure hereinbefore described is disposed horizontally within the boiler 48 with the intake end thereof rearmost so that the operation of the hereinbefore described mixing structure will act as a means to accelerate the circulation of the water within the boiler 48.

In the use and operation where the structure shown in Figure 1 is used, the force of the incoming feedwater through the feed water pipe 24 which is discharged into the mixing pipe or member 25 will form a suction in this mixing pipe 25 and thereby draw boiler water from the suction head 28 through the boiler water pipe 26. The boiler water from the pipe 26 will be mixed with the feed water in the mixing member 25 so that the temperature of the feed water will be raised in proportion to the quantity of boiler water which is drawn from the boiler B. After the mixture of boiler and feed water passes the check valve 23, it will pass through the pipe 19 and will have the temperature thereof raised through the contact with the pipe 19 which is positioned within the boiler B. The mixture of boiler and feed water will then be discharged from the nozzle 17 in the same direction as the normal flow or circulation of boiler water in the boiler B. After the mixture of boiler and feed water has been discharged from the nozzle 17, the current set-up in the trough 12 will draw in additional boiler water through the intake end 19 of the trough 12 and the temperature thereof will be raised by the steam entering the trough through openings 13. This entire mixture will pass longitudinally and forwardly through the trough 12, a portion of this complete mixture being withdrawn or by-passed by means of the vanes or by-passing members 15 which are carried by the vertical walls of the trough 12. After this mixture passes the outlet or discharge end 16 of the trough 12, it will commingle with the remaining boiler water. Any dissolved oxygen or CO_2 caused by mixture of the feed water with the boiler water will rise from the trough 12 and any CO_2 gas generated in the trough 12 will also rise and commingle with the steam above the trough 12.

The structure shown in Figure 2 operates in a somewhat similar manner to that shown in Figure 1 except that the quantity of boiler water which is mixed with the feed water may be controlled to the desired extent by controlling the operation of the pump 43 which withdraws boiler water from the boiler 29 and forces this water into the coupling 40 and the mixing pipe 36.

The structure shown in Figures 3 to 9, inclusive, operates somewhat similar to that shown in Figure 1. However, the feed water is discharged under pressure from the discharge nozzle 68 into the Venturi structure formed by the

oppositely flared portions 67 and 66. This structure will form a suction in the intake pipe 69 so as to force boiler water to move inwardly of the intake tube 69. This boiler water will be mixed with the feed water discharged from the nozzle 68. By providing the forwardly flared portion 66 the feed water will more thoroughly mix with the boiler water and by providing a second reduced end 65 at the forward end of the mixing tube 64, the velocity of the mixture of boiler and feed water is again increased so that a second suction will be formed at the discharge end of the nozzle 65. This suction will draw in additional boiler water through the rearwardly flared intake member 63 which will enter the mixing tube 56 from the forwardly flared member 60. The mixture of boiler and feed water will then move longitudinally of the mixing member 56 and any dissolved oxygen or CO_2 gas in the mixture which is moving longitudinally through the tube 56 will be discharged through the opening 57 and thus be mixed with the steam which is partially present in the upper portion of the mixing member 56. This steam is present by reason of the fact that the upper portion of the mixing member 56 and the upper portion of the tube members 60 and 63 are also slightly above the normal water level. By providing the several nozzles in the mixing structure hereinbefore described, the velocity of the incoming feed water which is mixed with the boiler water is such as to draw in a greater portion of boiler water than is possible with a structure such as that shown in Figure 1. The direction of movement of the incoming feed water through the mixing structure hereinbefore described is in the same direction as the normal direction of circulation of the boiler water so that the incoming feed water will accelerate rather than retard the circulation of water in the boiler. Furthermore, by providing the intake member 63 forwardly of the mixing member 64, a quantity of sludge is also drawn into the mixing member 56.

What I claim is:

1. In a boiler, an upwardly opening trough open at each end, means supporting the trough in the boiler, a pipe discharging into one end of said trough, the opposite end of said pipe being open and positioned within the boiler below the normal water level, a pump interposed in said pipe, and means discharging feed water into said pipe between said pump and the discharge end of said pipe.

2. In a boiler, an upwardly opening trough open at each end and provided with a plurality of openings in the bottom thereof, a feed pipe discharging into one end of said trough, suction means connected to said pipe and communicating with the boiler water for withdrawing boiler water from the boiler and mixing the boiler water with the feed water in said feed pipe, and means between the ends of said trough for discharging a portion of the water therein into the boiler water.

3. In a boiler, an upwardly opening trough open at each end, means supporting the trough in the boiler, a feed pipe discharging into one end of said trough, and suction means connected to said pipe for withdrawing boiler water from the boiler and mixing the boiler water with the feed water in said feed pipe.

4. In a boiler, a combined boiler water and feed water mixing structure comprising a trough positioned in the boiler and provided with open opposite end and an open top, a nozzle discharging into one end of said trough, a pipe connected at one end to said nozzle and extending laterally through a wall of the boiler, a coupling connected to said pipe, a feed water pipe connected to said coupling, a boiler water pipe connected to said coupling and extending interiorly of the boiler, a suction head carried by said boiler water pipe, and a pump interposed in said boiler water pipe whereby to control the quantity of boiler water withdrawn from the boiler for mixture with the feed water.

5. In a boiler, an upwardly opening trough open at each end and communicating at each end with the boiler water, a combined boiler water and feed water mixing pipe discharging into one end of said trough, boiler water suction means communicating with said mixing pipe and said boiler for supplying boiler water to the mixing pipe, and a feed water supply means correlated with said mixing pipe for discharging feed water into said mixing pipe for simultaneous mixture of the feed water with the boiler water.

6. In a boiler, an open ended, upwardly opening horizontal trough positionable with at least a portion thereof below the normal boiler water level and communicating at each end thereof with the boiler water, a mixing pipe discharging into one end of said trough and extending laterally and outwardly of the boiler, a boiler water pipe having an open inner end disposed below the normal boiler water level and extending outwardly of the boiler, a tubular member connecting the extended ends of said mixing and boiler water pipes together, and means for discharging feed water into said tubular member whereby the discharge of feed water will draw boiler water into said tubular member for mixture therein and subsequent discharge of the mixture into said trough, the discharge of the mixture into said trough also drawing additional boiler water into said one end of said trough.

7. In a boiler, a combined boiler water and feed water mixing structure comprising a horizontally disposed trough-like mixing member open at each end and also open at the top thereof for the major portion of the length thereof, the open top portion of said member constituting a trough and the remaining portion constituting a mixing member communicating at one end with the trough and at the other end with the boiler water, means supporting said member with the open top portion thereof above the normal level of the boiler water, a second mixing member smaller in transverse section than said first mixing member and discharging at one end thereof into one end of said first mixing member, a boiler water conducting pipe extending axially from said second mixing member, a reduced connection between said boiler water pipe and said second mixing member, a combined feed water discharge and suction nozzle correlated with and disposed axially of said reduced connection, and a feed water pipe connected with said nozzle.

JULIAN W. SCHMID.