(No Model.)

C. A. WRIGHT.

CARD GILDING MACHINE.

No. 363,936. Patented May 31, 1887.

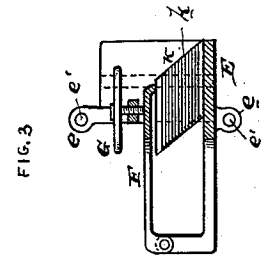

FIG. 3

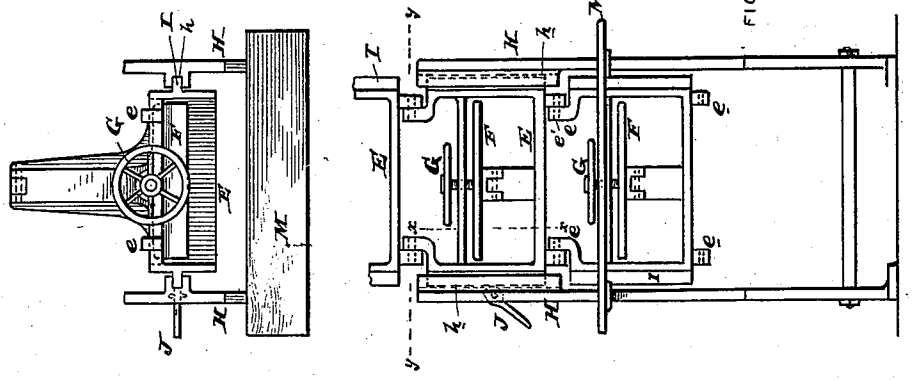

FIG. 2

FIG. 4

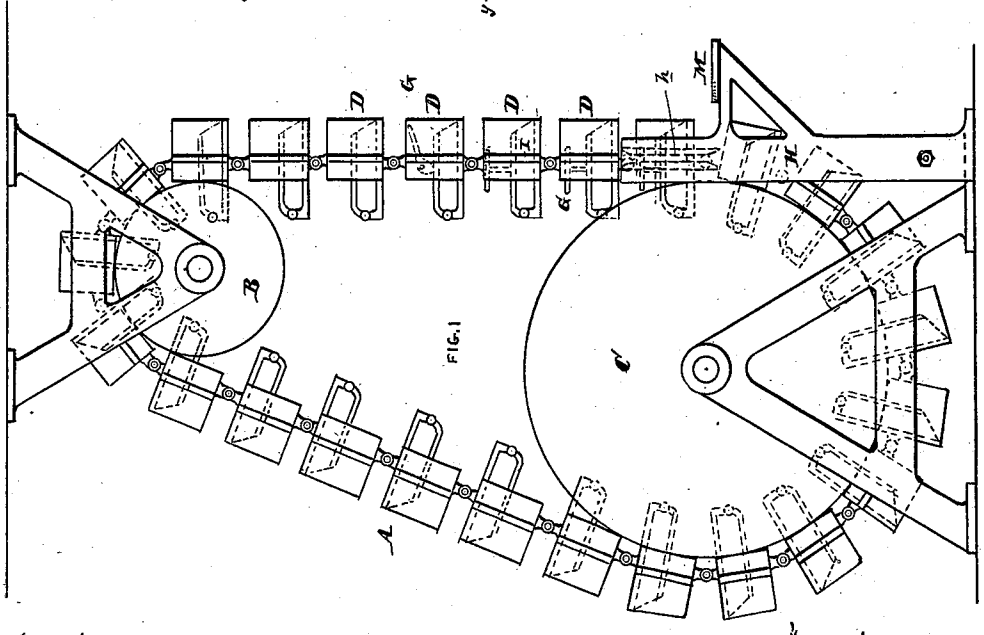

FIG. 1

Attest

E. M. Breckinridge.

E. McDermott.

Inventor

Chas. A. Wright

By his atty

[illegible]

N. PETERS, Photo-Lithographer, Washington, D. C.

UNITED STATES PATENT OFFICE.

CHARLES A. WRIGHT, OF PHILADELPHIA, PENNSYLVANIA.

CARD-GILDING MACHINE.

SPECIFICATION forming part of Letters Patent No. 363,936, dated May 31, 1887.

Application filed January 22, 1887. Serial No. 224,084. (No model.)

To all whom it may concern:

Be it known that I, CHARLES A. WRIGHT, of the city and county of Philadelphia, and State of Pennsylvania, have invented an Improvement in Card-Gilding Machines, of which the following is a specification.

My invention relates to a class of machines especially adapted to gilding edges of bevel-edged cards, though it may be adapted to cards of other shapes. The object in view is to reduce as much as possible the time consumed in gilding a large number of cards, to make the work more uniform, and to reduce the labor upon the work.

In the drawings, Figure 1 is a side elevation of a card-gilding machine embodying my improvements. Fig. 2 is a front elevation of the clamps shown in the custody of the guide-frames. Fig. 3 is a cross-section of Fig. 2 on line *x x*, and Fig. 4 is a cross-section of Fig. 2 on line *y y*.

A represents a chain of card-clamps, D, which passes over wheels or drums B and C. This chain of clamps may travel horizontally or vertically, or, if desired, obliquely, the vertical arrangement being preferable, owing to the more limited floor-space required. The clamps D consist, essentially, of a frame, E, preferably T-shaped, having a wide base and rear extension, to which is hinged a vertically-adjustable clamp plate, F, also preferably T-shaped and adapted to be raised and lowered by a screw, G, or other suitable device, as shown. This clamp may be very similar in appearance to a letter-press, except that the plate F is preferably of less width than the base of the frame E.

K represents a stack of cards, having their front oblique edges arranged so as to form a continuous surface, *k*, and these cards are clamped between the plate F and base of the frame E, as shown in Fig. 3. These frames E are provided with hinged lugs *e* at top and bottom, by which they are coupled together by pins *e'* to form the endless chain A. The sides of the frame E may have guides I, which run in grooves *h* on brackets H, arranged at the position where the operator gilds the cards, to prevent the clamps from vibrating during the act of gilding. To prevent the descent or vertical movement of the clamps prematurely, the frame H may have an eccentric or other suitable clamp, J, which grips the clamp and holds it rigid in the guides.

M is the operator's table, which is supported by the brackets H in front of the clamps, but sufficiently low to enable the gilder to work above it.

In operating, the chain of clamps may be arranged vertically or horizontally, as desired; but the former is preferred, owing to the smaller floor-space required. As the clamps are moved around, they come below the operator's table, where the stacked cards may be inserted in the clamps, or, if already inserted, they may be gilded.

While the machine is especially adapted to bevel-edged cards, it may also be used for straight-edged cards. As the clamps come in succession before the operator's table, they are guided by the vertical guides, and thus held against lateral displacement; and to prevent any jarring or vertical movement the said clamps are locked in such guides until the completion of the gilding or clamping operation. One clamp never leaves the guides until the next adjacent clamp enters them.

It is evident that while I prefer the construction herein set out, I do not limit myself to the details thereof, as they may be varied in many ways without departing from my invention.

Having now described my invention, what I claim as new, and desire to secure by Letters Patent, is—

1. In a card-gilding machine, the combination of a chain of card-clamps, suitable guides therefor, whereby they may be moved one after the other past the operator, and a lock to secure said chain of clamps in any desired position.

2. In a card-gilding machine, the combination of a chain of card-clamps, suitable guides therefor, whereby they may be moved one after the other past the operator, a lock to secure said chain of clamps in any desired position, and a stationary operator's table, before which the clamps are guided.

3. In a card-gilding machine, the combination of two guide wheels or cylinders arranged at a distance apart and an endless chain of card-clamps supported by said wheels or cylinders and adapted to be moved about them.

4. In a card-gilding machine, the combination of two guide wheels or cylinders arranged at a distance apart, an endless chain of card-clamps supported by said wheels or cylinders, adapted to be moved about them, and a guide for said clamps at one place in their travel to steady them.

5. In a card-gilding machine, the combination of two guide wheels or cylinders arranged at a distance apart, an endless chain of card-clamps supported by said wheels or cylinders and adapted to be moved about them, a guide for said clamps at one place in their travel to steady them, and a lock to prevent movement to said clamps when it is desired to operate on the cards held by them.

6. In a card-gilding machine, the combination of two guide wheels or cylinders arranged at a distance apart, an endless chain of card-clamps supported by said wheels or cylinders, adapted to be moved about them, and a stationary operator's table, before which the card-clamps are caused to travel.

7. In a card-gilding machine, the combination of a chain of card-clamps, suitable guides therefor, whereby they may be moved one after the other past the operator, the said clamps each consisting of a frame which is hinged or linked to adjacent frames, a movable jaw carried by the frame, and a screw or equivalent device to force said movable jaw down upon the cards.

8. In a card-gilding machine, the combination of two guide wheels or cylinders arranged at a distance apart, an endless chain of card-clamps supported by said wheels or cylinders and adapted to be moved about them, the said clamps each consisting of a frame which is hinged or linked to adjacent frames, a movable jaw carried by the frame, and a screw or equivalent device to force said movable jaw down upon the cards.

9. In a card-gilding machine, the combination of two guide wheels or cylinders arranged at a distance apart, an endless chain of card-clamps supported by said wheels or cylinders and adapted to be moved about them, the said chain of clamps consisting of a series of T-shaped skeleton frames hinged or linked together, a T-shaped loose clamp-jaw hinged to the rear extension of the skeleton frames, and hand clamp-screws or their equivalent carried by the frames and adapted to force the loose jaw down upon the cards.

10. In a card-gilding machine, a series of independent card-clamps arranged end to end, said clamps consisting of a clamp-frame, a loose clamping-jaw, and a clamping-screw or its equivalent carried entirely by the clamp to which it belongs and independent of the adjacent clamps, substantially as and for the purpose specified.

In testimony of which invention I hereunto set my hand.

CHARLES A. WRIGHT.

Witnesses:
R. M. HUNTER,
S. W. REEVES.