Nov. 11, 1941. F. J. LENOX 2,262,242

CONTAINER

Filed March 24, 1938 2 Sheets-Sheet 1

Fig. 1

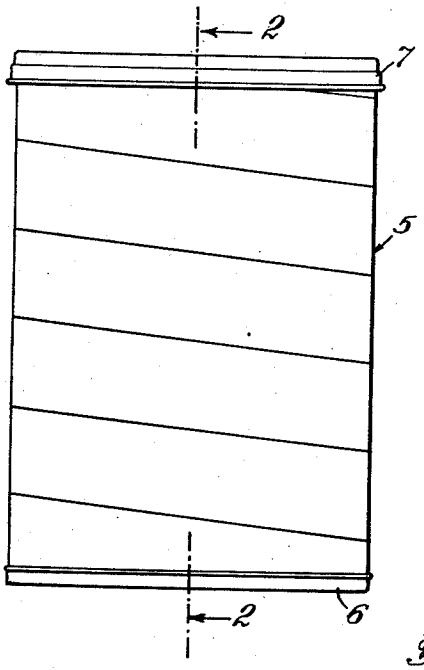

Fig. 2.

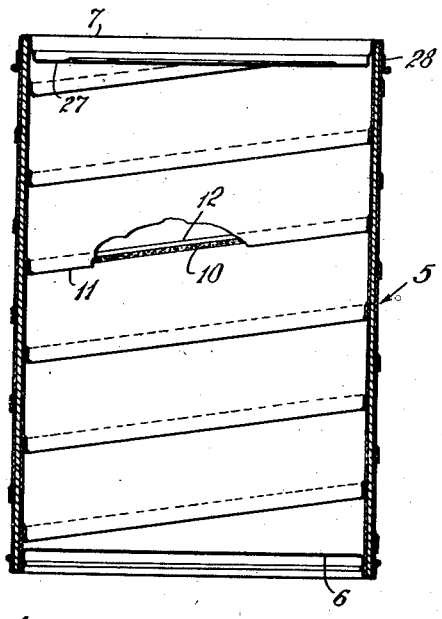

Fig. 4.

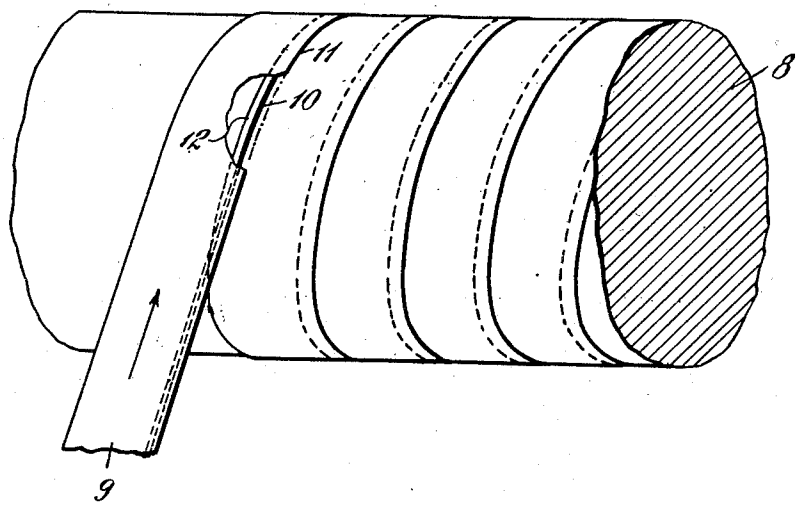

INVENTOR
Frank J. Lenox
BY
Dennie Davis Morris & Edmonds
ATTORNEYS

Nov. 11, 1941. F. J. LENOX 2,262,242

CONTAINER

Filed March 24, 1938 2 Sheets-Sheet 2

Fig. 3,

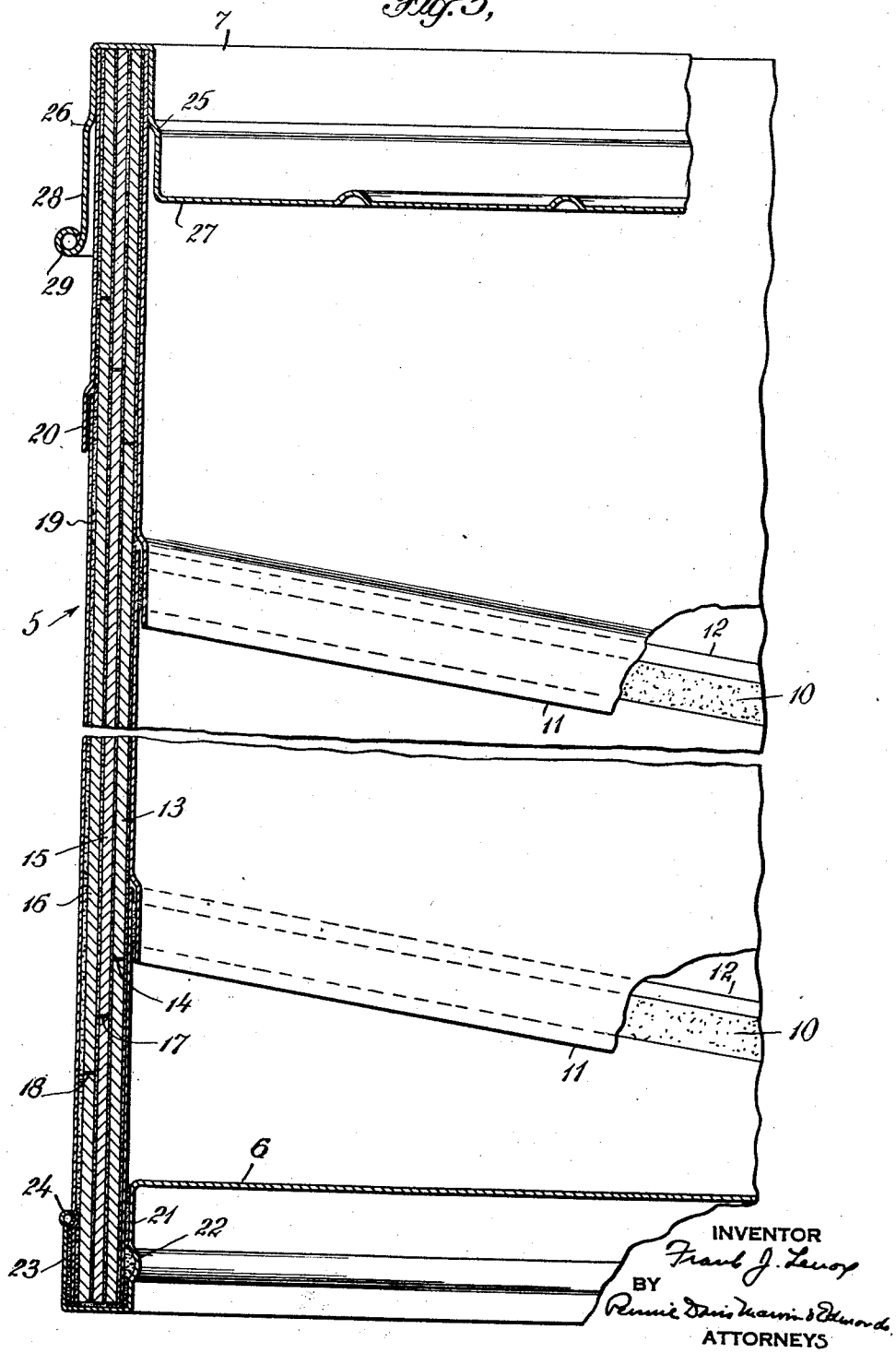

INVENTOR
Frank J. Lenox
BY
Rennie Davis Harris & Edwards
ATTORNEYS

Patented Nov. 11, 1941

2,262,242

UNITED STATES PATENT OFFICE

2,262,242

CONTAINER

Frank J. Lenox, Jackson Heights, N. Y.

Application March 24, 1938, Serial No. 197,809

3 Claims. (Cl. 93—39.1)

This invention relates to helically wound paper containers with metal ends, adapted for use in shipping and storing various bulk materials, particularly those having an oily or greasy constituent for which it has been necessary to use metal containers heretofore.

One of the difficulties with metal containers, aside from their relatively high cost, is their tendency to "sweat," thus necessitating the use of a liner and involving additional expense to avoid contact of the "sweat" with products and especially foodstuffs which tend to rancidity or other spoilage if subjected to moisture.

Another undesirable feature of metal containers is that because of their high cost attempts are made to salvage and re-use them for other products, especially foodstuffs. Usually the containers are not sterilized or even cleaned after the intial use. Such re-use of containers is undesirable from the standpoint of public health, since it frequently leads to contamination of foodstuffs, or even spoilage thereof.

It is the object of the present invention to afford a relatively inexpensive container of substantial strength, adapted to withstand the abuse involved in shipment, and to afford in such a container imperviousness to oil and grease, so that materials, and particularly foodstuffs, of an oily or greasy nature may be shipped therein without danger of seepage of the oil or grease and without difficulty due to "sweating." Owing to the relatively low cost of such containers, there is little or no inducement to re-use them when the original contents are removed. Furthermore, there is a considerable saving in the initial cost of the containers.

Helically wound paper containers are manufactured by winding layers of paper stock in helical form upon a mandrel to afford a continuous cylinder of predetermined diameter, which may be cut then into lengths of size to provide the desired capacity. Metal bottoms and covers are then applied to the truncated cylinders, to provide the finished containers. The paper stock is usually of an inexpensive character, such as chip, news stock, or strawboard. Such materials are porous and not, therefore, impervious to grease and oil, which readily pass, by capillary action, through the material. To make such containers oil and greaseproof, it is necessary to provide an initial layer of an oil and grease-impervious material such as synthetic parchment, glassine, or metal foil. This material is wound helically upon the mandrel before the layers of paper are applied thereto.

In the winding of the various layers upon the mandrel, it is necessary to apply glue in order that the layers may be secured together under the pressure of a moving belt. If a layer of glue is applied to the outer surface of a thin sheet such as is used for the impervious lining of the container, the sheet will wrinkle and curl and cannot be fed successfully to the mandrel. Furthermore, a more serious difficulty is met by reason of the extrusion of glue beyond the lapped edge of the sheet when pressure is applied thereto by the belt. The glue is extruded on the under side and reaches the surface of the mandrel. It is frequently necessary to stop the winding machine to replace rolls of paper which are being fed or to repair the machine, and any adhesive which has reached the surface of the mandrel will set and thus hold the paper cylinder affixed thereto. In that case, it is necessary to cut the adhered cylinder from the mandrel and to wash the mandrel with a suitable solvent for the glue. Obviously this entails considerable losses, and it is necessary, therefore, to avoid any operation which permits extrusion of glue onto the mandrel in order to permit satisfactory and economical operation.

I have discovered that the thin sheet of oil and grease-resistant material which forms the liner of the container may be applied successfully to the mandrel without danger of adhering thereto and that the paper forming the body of the container may be applied likewise to afford containers which are adapted for the purposes of the invention, provided that the adhesive is applied only in a band along the overlying edge of the material, the band being sufficiently narrower than and spaced from the edge of the material so that none of the adhesive will be squeezed by pressure past the underlying edge of the lap and onto the mandrel. By properly adjusting the width and position of the strip of adhesive with reference to the width of the lap, I successfully avoid all of the difficulty heretofore experienced in attempting to apply oil and grease-impervious layers as the foundation and lining for helically wound paper containers. The next succeeding layer, which is a part of the body of the container, may be coated with adhesive on both sides, for example by passing it through a bath of the adhesive. When wound on the underlying impervious sheet, it will adhere thereto and will seal any pinholes or minute imperfections without permitting any of the adhesive to be extruded onto the mandrel. Usually several layers of paper are applied to break the helical

joints, and each may be coated with adhesive on both sides except the outer or covering layer, which usually is of relatively thin paper designed particularly to give the container a finished and attractive appearance.

In addition to a sealed lining which is impervious to oily and greasy materials which may be applied without danger of adhering to the mandrel, I have provided an improved bottom of metal which is secured to the truncated cylinder by suitable adhesive material and is adapted to afford a satisfactory sealed closure. I have also improved the cover to adapt it for application to containers made from paper materials which because of their nature vary somewhat in thickness and may, in certain cases, be slightly out of round when the container is finished. The cover is adapted to adjust itself readily to any slight differences in dimension, so that a satisfactory closure for the container is maintained.

The invention will be more readily understood by reference to the following detailed description in connection with the accompanying drawings, illustrating a preferred embodiment of the invention. In the drawings,

Fig. 1 is an elevation of a completed container;

Fig. 2 is a section on the line 2—2 of Fig. 1;

Fig. 3 is an enlarged sectional view illustrating the structure of a typical container, certain details being slightly out of proportion in order that the subject matter may be clearly illustrated, and showing the approved structure of the top and bottom of the container; and

Fig. 4 is a fragmentary view in perspective illustrating the helical application of the lining to the mandrel.

Referring to the drawings, 5 indicates the body of a container of paper material having a bottom 6 and a cover 7 of metal. In forming the container, a mandrel 8 is employed. Machines adapted for the forming of paper containers by helical winding are well-known in the art, and the details thereof, including the belt which draws the paper onto the mandrel and applies pressure to the successive layers of paper material, need not be illustrated. As the paper is laid on the mandrel, the belt advances the formed cylinder.

In accordance with the invention, a strip 9 of material which is substantially impervious to oil and grease, such as artificial or vegetable parchment, glassine or metal foil, is applied continuously and helically to the mandrel with a strip 10 of adhesive applied between the overlying edge 11 and the underlying edge 12. As previously indicated, the width of the strip of adhesive is adjusted with respect to the lap so that when pressure is applied by the belt the adhesive will not be squeezed past the underlying edge 12 and onto the mandrel 8. Thus, the winding may be conducted more or less continuously, without any danger of applying adhesive directly to the mandrel, thus causing the finished cylinder or the lining thereof to stick to the mandrel.

As the layer of lining material 9 is applied continuously by helical winding upon the mandrel, the successive layer 13 of chip, news stock, strawboard, or other suitable paper material, is similarly applied, with the edges abutting as indicated at 14. In the case of this layer, both sides are coated with adhesive, for example by passing the strip of material through a bath of adhesive, and as the strip is applied it adheres to the lining 9, the adhesive on the inner side serving to seal any pinholes or other imperfections in the lining without extruding the adhesive onto the mandrel. Similarly, layers 15 and 16 may be applied with the abutting edges staggered, as indicated at 17 and 18, each layer having adhesive on both sides. It will be understood that any number of layers may be employed and that they may vary in thickness and in width, the drawing being merely an illustration of the typical container. Finally, a cover sheet 19 is applied without adhesive on its outer surface, and preferably with lapped joints 20 in order to give the container a finished appearance. As the application of the several layers affords a completed cylinder, the latter may be advanced on the mandrel and sections may be cut therefrom to afford truncated cylinders of various sizes, depending upon the desired capacity of the containers which are made therefrom.

To complete the container, I provide a bottom 6 of suitable metal such as tin plate formed preferably with a depending portion 21 having a channel 22 and a portion 23 which is adapted to be bent or seamed about the lower edge of a section of the cylinder built up as hereinbefore described. In applying the bottom, I employ a suitable adhesive. Various materials may be employed for this purpose, but I prefer one known in the trade as "flexible glue." In applying the bottom, a layer of the glue is applied to the depending portion 21 at the circumference of the bottom, and is permitted to stand until a film forms on the surface, which prevents the glue from running. Thereupon the bottom may be inverted and placed upon the edge of the truncated cylinder which is to form a container, and the portion 23 may be spun over the edge with the usual equipment employed for this purpose, so that the bead 24 is forced into contact with the outer surface of the cylinder and the glue is forced into the side channel 22. The glue forms a complete seal for the bottom, which is impervious to seepage or oil and grease.

Other sealing material commonly used in the can industry, such as sodium silicate and thermoplastic materials including various products such as rubber and lacquers, may be substituted for "flexible glue." The method of application of such materials may differ somewhat from the practice in the case of "flexible glue," but such methods are well known in the art and need not be described in detail.

The cover 7 is designed so that it can be applied easily to the body of the channel, even though the mouth of the container may be out of round or there may be variations in the thickness of the body. The cover is a channel-shaped member with shoulders 25 and 26 and inner and outer skirts 27 and 28, the latter having a bead 29. When the cover is pressed down upon the upper edge of the container, the skirts which are separated by a distance greater than the maximum thickness of the container wall, readily engage the edge which is borne into its proper configuration by the shoulders 25 and 26, so that the edge enters the upper channel portion of the cover, forming a sufficiently tight joint to afford the necessary seal for the container, preventing the entrance of moisture, dirt and other possible contaminating material.

The container as described is adapted particularly for the packing and shipment of bulk foodstuffs such as shredded cocoanut. The oily nature of this material is well-known, and it has not been possible heretofore to ship shredded

cocoanut in other than metal containers. It may be shipped and handled in containers as described herein, without danger of disseminating the oily constituent into the body of the container, since the lining is sufficiently oil and grease-proof to prevent any capillary transfer through the walls. All difficulty with sweating is avoided, and this is particularly desirable in the packing of shredded cocoanut because the "sweat" has a tendency to cause rancidity.

The container as described can be used for shipping numerous other food products, such, for example, as frozen eggs, potato chips, etc., and for other non-edible materials. It may be employed satisfactorily for products which are not oily or greasy, although it is designed particularly as a container, to prevent the escape of oil and grease, for materials having such constituents.

Although I have mentioned the paper materials best suited for the purpose of the invention, it is not limited to any particular materials, since any flexible stock adapted to be cut and applied in the manner described and capable of affording the desired rigidity and, in the case of the lining, imperviousness to oil and grease, may be utilized for the purpose of the invention.

Various changes may be made in the form and arrangement and the structural details of the container, without departing from the invention or sacrificing any of the advantages thereof.

I claim:

1. The method of making containers which comprises winding a layer of oil and grease-resistant material helically on a mandrel with overlapping edges, applying adhesive between the overlying edge and the underlying edge of the material in a band spaced from the edge of the material which lies next to the mandrel and sufficiently narrower than the lap so that none of the adhesive will be squeezed by pressure to the underlying edge and onto the mandrel, helically winding and adhesively securing layers of flexible material of substantial thickness and strength with the edges abutting and successive layers overlapping the abutting edges, severing sections from the hollow cylinder thus formed, and securing bottom closures to the separate sections.

2. In the method of making containers by helically winding paper stock, the step of providing a lining for the container which comprises winding a layer of oil and grease-resistant material helically on a mandrel with overlapping edges, and applying adhesive between the overlying edge and the underlying edge of the material in a band spaced from the edge of the material which lies next to the mandrel and sufficiently narrower than the lap so that none of the adhesive will be squeezed by pressure to the underlying edge and onto the mandrel.

3. In the method of making containers by helically winding paper stock, the step of providing a lining for the container which comprises winding a layer of oil and grease-resistant material helically on a mandrel with overlapping edges, and applying adhesive between the overlying edge and the underlying edge of the material, said adhesive being spaced from the edge of the material which lies next to the mandrel, the amount of adhesive applied being such that pressure exerted on the lining by the winding of the paper stock thereon will not cause the adhesive to be squeezed to the underlying edge of the lining material and onto the mandrel.

FRANK J. LENOX.