United States Patent [19]

Randell

[11] **3,811,789**

[45] **May 21, 1974**

[54] **ROTODYNAMIC FLUID MACHINES**

[75] Inventor: **Forrest Thomson Randell,** Cathcart, Scotland

[73] Assignee: **Weir Pumps Limited,** Cathcart, Glasgow, Scotland

[22] Filed: **July 9, 1973**

[21] Appl. No.: **366,315**

Related U.S. Application Data

[63] Continuation-in-part of Ser. No. 243,669, April 13, 1972, abandoned.

[52] **U.S. Cl.** **415/1,** 415/53, 415/178, 60/646, 60/657

[51] **Int. Cl.** **F01d 1/00**

[58] **Field of Search** 415/53, 1, 178; 165/70, 165/11; 60/107

[56] **References Cited**

UNITED STATES PATENTS

1,385,115	7/1921	Cone	415/53
3,213,798	10/1965	Carswell	415/176
3,356,290	12/1967	Lehmann	415/176
3,370,542	2/1968	Harvey	415/176
3,651,866	3/1972	Lileg	415/176

Primary Examiner—C. J. Husar

Attorney, Agent, or Firm—Nathaniel A. Humphries, Esq.

[57] **ABSTRACT**

In a rotodynamic fluid pump installation wherein the pump includes a casing having an inlet and outlet for pumped fluid, leakage fluid such as for example as occurs at the glands and bearing surfaces of the pump is withdrawn from the casing, cooled, and recycled to the pump inlet to reduce cavitation at low pump loads.

18 Claims, 4 Drawing Figures

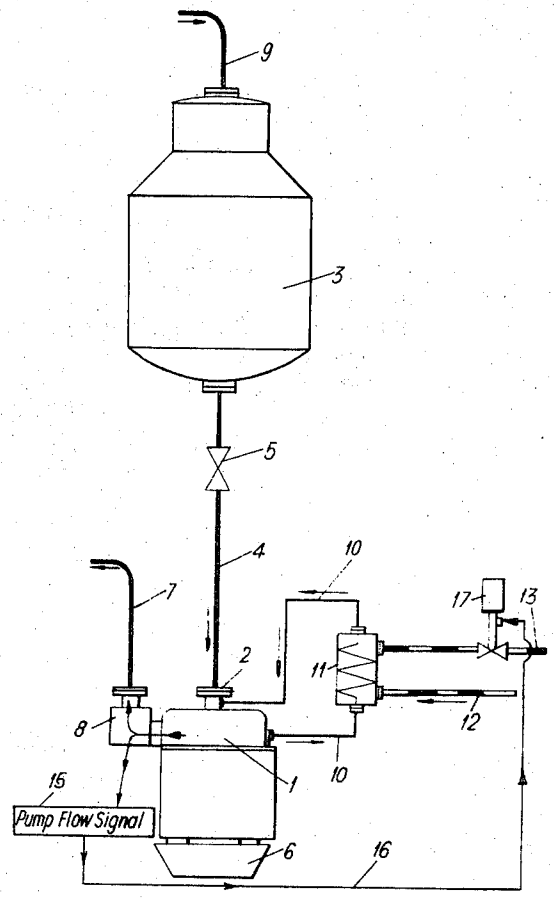

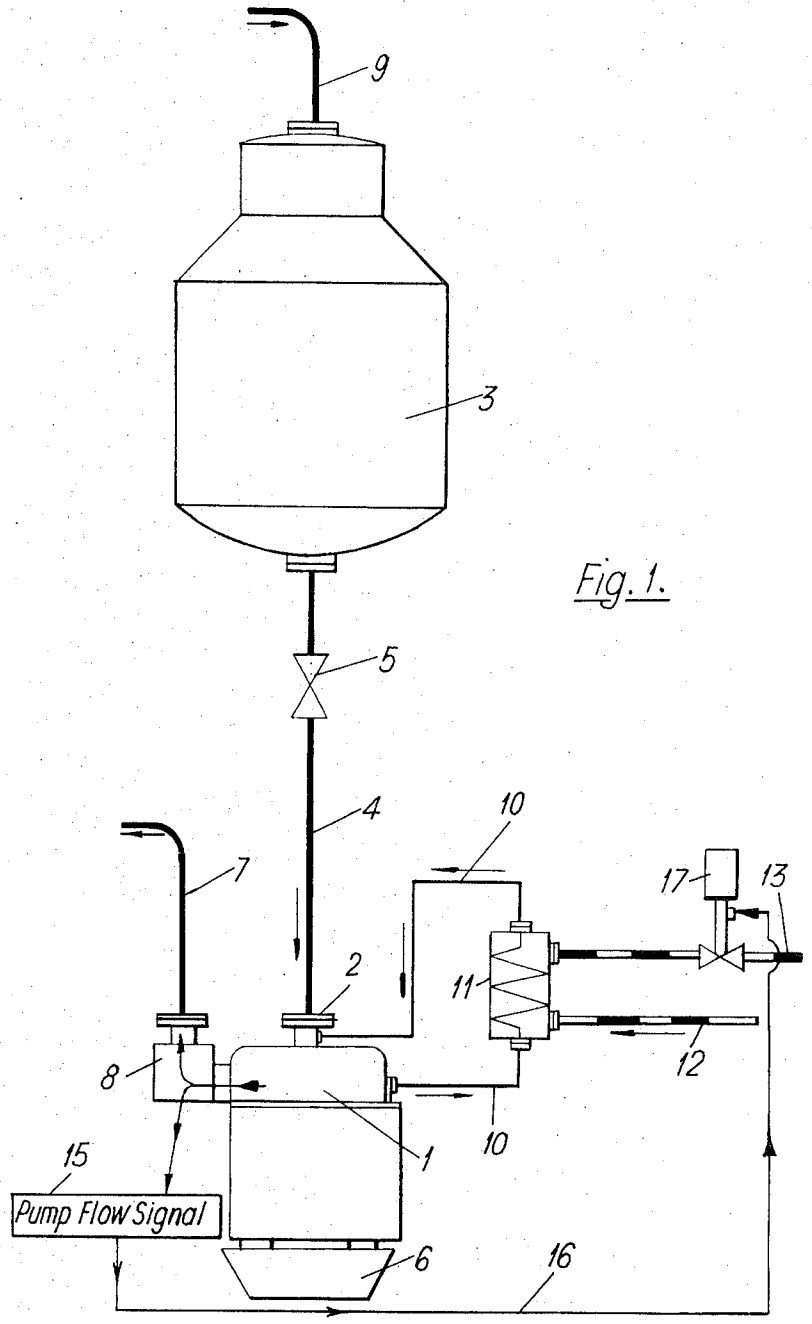

Fig. 1.

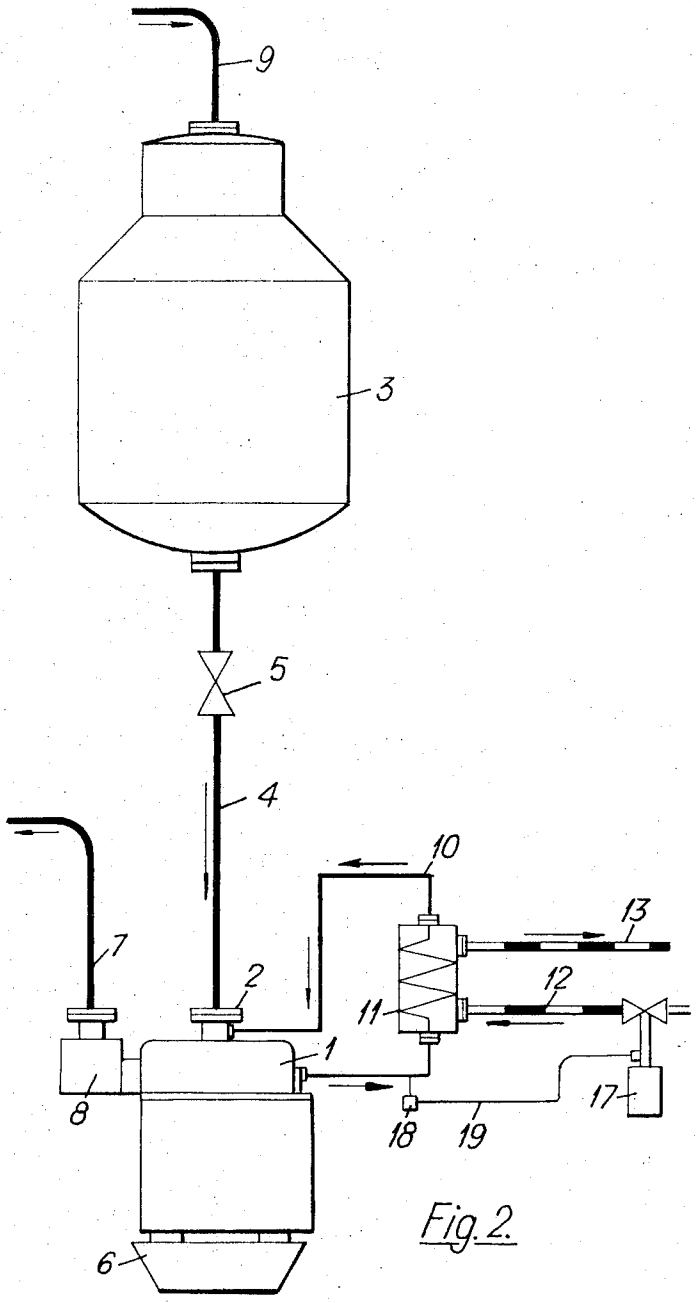

Fig. 2.

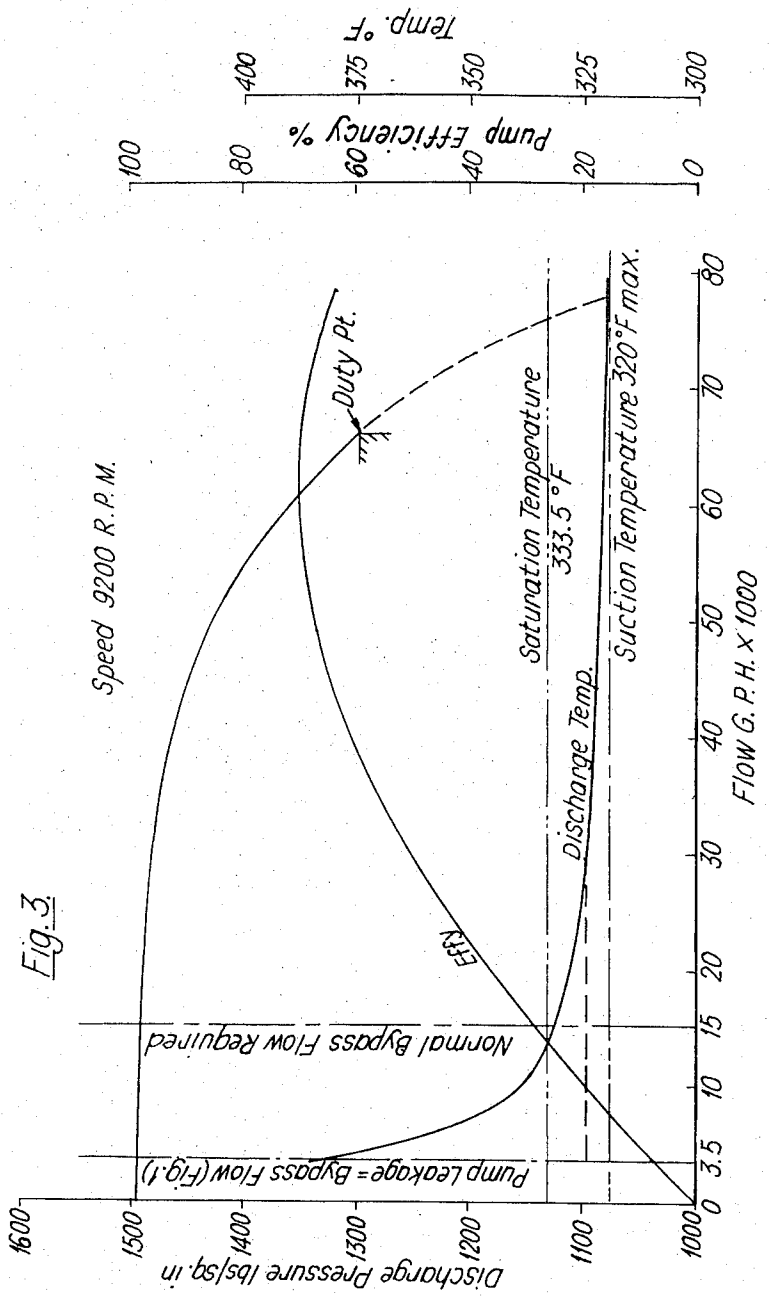
Temp. °F
400
375
350
325
300
Pump Efficiency %
100
80
60
40
20
0
Duty Pt.
Speed 9200 R.P.M.
Saturation Temperature
333.5 °F
Suction Temperature 320°F max.
Discharge Temp.
EFF
Normal Bypass Flow Required
Pump Leakage = Bypass Flow (Fig. 1)
Discharge Pressure lbs/sq. in
1600
1500
1400
1300
1200
1100
1000
0
3.5
10
15
20
30
40
50
60
70
80
Flow G.P.H. x 1000

Fig. 3

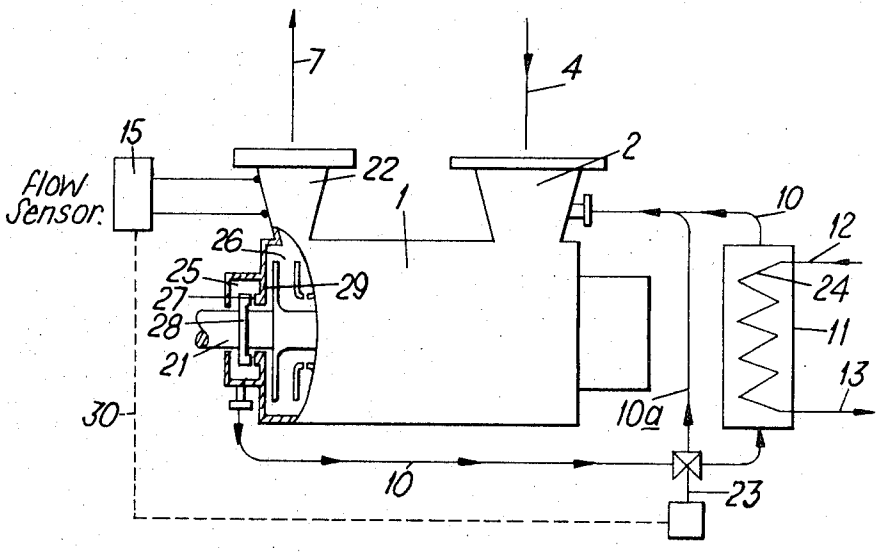

Fig. 4.

ROTODYNAMIC FLUID MACHINES

This application is a continuation-in-part of my application Ser. No. 243,669 filed Apr. 13, 1972, now abandoned.

The present invention relates to rotodynamic fluid machines, in particular rotodynamic pumps.

When a rotodynamic pump is operating at low load, the efficiency losses within the pump are constituted by a heat loss which is absorbed by the work fluid treated by the pump. It is a feature of rotodynamic pumps that at low leads a sharp rise in temperature occurs for a small change in flow. If the consequent rise in temperature of the work fluid increases beyond the absolute saturation temperature for the particular pressure of the fluid, then undesirable cavitation can occur in the pump due to "flashing" of the fluid at the throttling surfaces of the pump.

In a previously proposed arrangement, in order to prevent the pump from cavitating due to a temperature rise beyond that allowable, a recirculation line was provided to recycle discharge from the pump at a location in the discharge conduit upstream of a non-return discharge valve to a deaerator (or heater storage tank), the recirculation line including a fluid pressure reducing orifice. The discharge valve was provided with a manual or automatic control to ensure recirculation of discharge through the recirculation line during periods of light load or shut-off. The recirculation comes into operation with continuous bleed back to the deaerator, the quantity of bypass varying between 5 to 20 per cent of the pump's normal capacity.

It is an object of the present invention to provide an improved method of obviating or mitigating this undesirable cavitation in pumps working at light load.

According to the present invention, a method of reducing cavitation at low loads in a rotodynamic fluid machine including a casing having an inlet and an outlet for work fluid, comprises withdrawing leakage fluid from the casing, cooling the withdrawn fluid, and recycling the cooled fluid to the inlet.

Further according to the present invention, a rotodynamic fluid machine including a casing having an inlet and an outlet for work fluid, is provided with a recirculation line for recycling leakage fluid from the casing to the inlet, and heat-exchanging means in the recirculation line for cooling the recycling fluid.

Embodiments of the present invention will now be described by way of example with reference to the accompanying drawings in which:

FIG. 1 shows schematically a rotodynamic pump installation according to one embodiment of the present invention;

FIGS. 2 and 4 show schematically rotodynamic pump installations according to further embodiments of the present invention: and

FIG. 3 shows graphs of the operational characteristics of a pump installation according to the present invention.

Referring to FIG. 1, a rotodynamic pump 1 is located with its impeller shaft (not shown) vertical, and has its suction inlet 2 fed with feed fluid, such as water, from a deaerator 3 located vertically above the pump, the interconnecting conduit 4 between the deaerator 3 and the pump suction inlet 2 including a control valve 5. The pump impeller shaft is driven by a steam turbine 6 but any other suitable power source could be used

such as for example an electric motor. The discharge from the pump 1 is delivered through an outlet conduit 7, and via a non-return discharge valve 8, to the required receiver (not shown), say as boiler feed. The deaerator 3 is fed with condensate from a suitable source (not shown) via a supply line 9, such as for example from the condenser of a steam turbine.

Hydraulic leakage will occur in the pump 1, for example at the glands and bearing surfaces of the pump 1, and it is a feature of the present pump arrangement that this leakage is collected and returned via a recycling conduit 10 to the suction inlet 2 of the pump 1 for admixture with the feed water. Further, a heat exchanger 11 is intercalated in the recycling conduit 10 to cool the recycled leakage water; secondary cooling fluid (for example cold water) is delivered to and discharged from the heat exchanger 11 by an inlet conduit 12 and discharge conduit 13 respectively. The leakage flow is passed through the heat exchanger 11.

It is an object of the present pump arrangement to ensure that the temperature of the water passing through the pump 1 does not approach too closely the absolute saturation temperature of the water for the particular pressure of the water, this likelihood occurring particularly when the pump is operating at low load. Thus a flow sensor 15 is provided to measure the outflow from the pump 1 and is operatively connected by signal line 16 to a control valve 17 in the secondary cooling water conduit system 12, 13. In particular, the control valve 17 is located in the discharge conduit 13 of the system, which location is advantageous in that it ensures that the heat exchanger is adequately filled with cooling water during pump operation; but alternatively it will be appreciated that the isolating valve could be satisfactorily located in the inlet conduit 12. The control arrangement is such that a signal is taken from the main control loop so that when the discharge flow is unsatisfactory, particularly at very low pump loads, the sensor 15 signals the control valve 17 so that cooling fluid is delivered to the heat exchanger to cool the recycled fluid by the required amount. The addition of the cooled leakage water to the feed water, reduces the temperature of the feed water passing to the pump impeller so that the maximum temperature reached by the water in the pump can be controlled to avoid cavitation due to increase of the water temperature above the absolute saturation temperature.

In a particular example (see FIG. 3), the pump is supplied with feed at 93 psig at 320°F, and the absolute saturation temperature at this pressure is 333.5°F. It is arranged that the rise of water temperature within the pump does not approach within 5 F degrees of this saturation temperature, to avoid "flashing." The recycled leakage water is therefore cooled to ensure that the water temperature within the pump does not exceed this desired value, i.e. 5 F degrees below saturation temperature.

In the second embodiment of the present invention shown in FIG. 2, a pump installation is provided similar to that in FIG. 1 and like items of the two installations have like reference numerals. However, in the arrangement of FIG. 2, the sensed condition is the temperature of the leakage water, which leakage water temperature is indicative of the temperature within the pump. Thus, a temperature sensor 18 is located in the recycling conduit prior to entry to the heat exchanger to sense the temperature of the leakage water as discharged from

the pump **1**, and the sensor **18** is operatively connected via signal line **19** to the control valve **17** in the secondary cooling fluid inlet conduit **12.** When the temperature of the leakage fluid increases above a predetermined level, the control valve **17** is actuated so that cooling fluid is delivered to the heat exchanger to cool the recycled fluid by the required amount. Again, the maximum temperature reached by the water in the pump is controlled to avoid cavitation due to increase of the water temperature above the absolute saturation temperature.

The set point accuracy of the sensor **13** is within **2** F degrees and can be supplied and protected from maladjustment by a sealed protective cover. On failure of the temperature sensor **18** or motivating supply to the control valve, the cooling supply will be admitted, thus preventing any abnormal rise in temperature, i.e. cooling valve is fail safe.

The above pump arrangement according to the present invention is protected under all operational conditions, and has the following advantages over the previously proposed system:

a. It has higher operating efficiency at light load.
b. It is silent in operation and does not require pressure breakdown through an orifice.
c. It enables the use of small-bore lines by virtue of the reduced fluid capacity involved.
d. The cost of a bypass valve and a recirculation line to deaerator is avoided — a considerable cost advantage.
e. It is self-protecting.

Further, by the above described arrangements according to the present invention, only that heat at low feed supply flows which could cause dangerous overheating at its source is removed. The arrangement improves the system efficiency. This differs from the arrangement say wherein the feed from the deaerator to pump suction is cooled by the provision of a cooler in the feed line: by the present arrangement the supply feed temperature can be maintained as high as the system heat recovery will allow to improve the overall heat balance of the system, and the arrangement has the advantage of gaining on the normal system heat loss by the difference in flows and radiation losses from the bypass recirculation pipework.

Whereas in the first described embodiment of the present invention, the rate of outflow of discharged fluid from the pump was measured, it could be arranged alternatively for the control valve to be actuable through some other condition of the discharged fluid.

In the embodiment of the present invention shown in FIG. **4,** a rotodynamic pump **1** is of the multi-stage type and is particularly intended for a ship-board installation: the pump can be arranged with its impeller shaft **21** horizontal and is driven by any suitable drive means. A heat exchanger **11** is again provided in the leakage recirculation line **10** but a by-pass conduit **10***a* is additionally provided to enable the leakage liquid to bypass the heat exchanger **11** at suitable circumstances as explained later. A diversionary control valve **23** in the line **10** can be set to direct the leakage liquid through the heat exchanger **11** or through the heat exchanger by-pass conduit **10***a*, but the valve **23** could be arranged to deliver portions of the leakage liquid through the heat exchanger **11** and the by-pass conduit **10***a*. The cooling liquid inlet and discharge conduits **12** and **13** do not include a flow control valve, so that a substantially constant flow of cooling liquid which in the present embodiment can conveniently be sea water (brine) passes through the cooling conduit **24** of the heat exchanger **11** and such a constant cooling liquid flow has decided advantages as will be explained later.

The inlet of the recirculation line **10** is connected to a leakage chamber **25** of the pump casing located at a high pressure end **26** of the pump, and entry to this chamber **25** is via an annular expansion clearance **27** located between a disc **28** on the impeller shaft **21** and the end wall **29** of the final stage of the pump. Consequently, high pressure leakage liquid flowing from end **26** to the chamber **25** is reduced in pressure by the expansion clearance **27.**

A flow sensor **15** is located at the pump discharge **22** to measure the pump discharge flow and is operatively connected to the control valve **23** by line **30.** The arrangement is such that at normal loads on the pump **1** (as indicated by sensor **15**) the leakage fluid is recycled direct to the pump inlet **2** via the by-pass conduit **10***a*, but when the pump load falls so that there is the distinct possibility that water flowing through the pump may approach the saturation temperature of the water for the particular pressure of the water (i.e. the critical temperature may be reached) then the leakage liquid is passed through the heat exchanger **11** thus protecting the pump **1** from handling saturated fluid.

If the leakage liquid temperature is high, for example above 212°F, and if the coolant flow through the heat exchanger **11** were stopped or considerably reduced say by a malfunction of the coolant flow control valves **17** of the FIGS. **1** and **2** arrangements then the coolant in the heat exchanger **11** would in time reach or very nearly reach the temperature of the recycled liquid. Now if the coolant is sea water, salt would be deposited on the heat exchange surfaces and such deposits considerably reduce the efficiency of the heat exchanger. In the FIG. **3** arrangement, the continuous flow of coolant inhibits salt deposition and provides a self-cleaning effect on the heat exchange surfaces.

Whereas in the FIG. **4** arrangement, leakage flow control was through the flow sensor **15,** it would of course be possible to have as an alternative control through a temperature sensor in the recirculation line **10.** Further, in any of the previous embodiments, leakage temperature (or flow) control could be achieved alternatively by (*a*) coupled temperature sensors in the pump suction and recirculation line, or (*b*) coupled temperature sensor in the pump recirculation line and pressure sensor in the pump suction or recirculation line.

However applicant believes that control simply through pump discharge flow to be preferable, since the arrangement is simpler and probably more accurate.

I claim:

1. A method of reducing cavitation at low loads in a rotodynamic fluid machine including a casing having an inlet and an outlet for work fluid comprising withdrawing leakage fluid from the casing, cooling the withdrawn fluid, by passing the leakage through the heat exchanger, regulating the cooling of the withdrawn fluid, and recycling the leakage fluid to the inlet.

2. A method as claimed in claim **1,** including sensing a condition of the fluid discharged from the machine,

and cooling said withdrawn fluid if the condition is unsatisfactory.

3. A method as claimed in claim 2, wherein the flow of discharged fluid is sensed.

4. A method as claimed in claim 1, including determining the temperature of the work fluid within the machine casing and cooling said withdrawn fluid if the temperature is unsatisfactory.

5. A method as claimed in claim 4, wherein the temperature of the withdrawn fluid is measured, and the withdrawn fluid is cooled in dependence on the temperature of the fluid, which temperature is indicative of the temperature of the work fluid within the machine casing.

6. A method of reducing cavitation at low loads in a rotodynamic fluid machine including a casing having an inlet and an outlet for work fluid, and a shaft mounted impeller within the casing, comprising withdrawing leakage fluid from the casing, controlling the flow of the withdrawn leakage fluid so that at least a portion of the flow passes through any one of (*a*) a heat exchanger serving to cool the portion and (*b*) a by-pass conduit of the heat exchanger, and recycling the withdrawn leakage fluid to the inlet.

7. A method as claimed in claim 6, wherein the leakage fluid is withdrawn from a pressure reduction chamber located at a discharge end of the casing.

8. A method as claimed in claim 6, wherein the flow of the withdrawn leakage fluid is controlled in dependence on the discharge fluid of work fluid from the casing outlet.

9. In a rotodynamic fluid machine comprising a casing having an inlet and an outlet for work fluid, and an impeller mounted on a shaft within the casing; apparatus for reducing cavitation at low loads in the fluid machine comprising a recirculation line for recycling leakage fluid from the casing to the inlet, heat-exchanging means in the recirculation line for cooling the recycling fluid and regulating means to regulate the rate of heat transfer in the heat exchanger, and consequently the temperature of leakage fluid flowing to the casing inlet.

10. Apparatus as claimed in claim 9, including sensing means for sensing the outflow of discharged fluid from the machine, and the regulating means are comprised by a control valve for regulating the flow of cooling fluid to the heat exchanger, the outflow sensing means being operatively connected to the control valve so that the temperature of the recycled leakage fluid is adjusted in accordance with the rate of outflow of work fluid from the fluid machine.

11. Apparatus as claimed in claim 10, wherein the control valve is located in a discharge conduit for the outflow of cooling fluid from the heat exchanger.

12. Apparatus as claimed in claim 10, wherein the control valve is located in an inlet conduit for the passage of cooling fluid from the heat exchanger.

13. Apparatus as claimed in claim 9, including temperature sensing means for measure the temperature of the recycling leakage fluid, and the regulating means are comprised by a control valve for regulating the flow of cooling fluid to the heat exchanger, the temperature sensing means being operatively connected to the control valve so that the temperature of the recycling leakage fluid is adjusted in accordance with the temperature of the leakage fluid at the outlet from the fluid machine.

14. Apparatus as claimed in claim 13, wherein the control valve is located in a discharge conduit for the outflow of cooling fluid from the heat exchanger.

15. Apparatus as claimed in claim 13, wherein the control valve is located in an inlet conduit for the passage of cooling fluid to the heat exchanger.

16. A rotodynamic fluid machine comprising a casing having an inlet and an outlet for work fluid, a shaft-mounted impeller within the casing; and apparatus for reducing cavitation at low loads in the machine comprising a recirculation line for recycling leakage fluid from the casing to the inlet, heat-exchanger means in the recirculation line including a primary conduit for the passage of leakage fluid and a secondary conduit serving for the throughflow of cooling fluid, a by-pass conduit of the recirculation line by-passing the heat exchanger means, and a control valve serving to control diversionary flow of leakage fluid through the heat exchanger means and the by-pass conduit so as to control the temperature of the leakage fluid passing to the casing inlet.

17. Apparatus as claimed in claim 16, wherein the casing includes a chamber at a high-temperature discharge end of the machine receiving leakage fluid from the high-pressure end, the chamber including means to reduce the pressure of the leakage fluid passing into the chamber, and the recirculation line is fluidly connected to said chamber so that leakage fluid is recycled from the chamber to the casing inlet.

18. Apparatus as claimed in claim 16, including sensing means for sensing the rate of outflow of discharged work fluid from the casing outlet operatively connected to the control valve so that the diversionary flow of leakage fluid is controlled in accordance with the rate of outflow of work fluid from the fluid machine.

* * * * *

UNITED STATES PATENT OFFICE
CERTIFICATE OF CORRECTION

Patent No. 3,811,789 Dated May 21, 1974

Inventor(s) Forrest Thomson Randell

It is certified that error appears in the above-identified patent and that said Letters Patent are hereby corrected as shown below:

Column 4, line 63,"the" (second occurrence)

should be -- a --.

Signed and sealed this 1st day of October 1974.

(SEAL)
Attest:

McCOY M. GIBSON JR.
Attesting Officer

C. MARSHALL DANN
Commissioner of Patents

FORM PO-1050 (10-69)

USCOMM-DC 60376-P69
☆ U.S. GOVERNMENT PRINTING OFFICE : 1969 O—366-334.