(12) INTERNATIONAL APPLICATION PUBLISHED UNDER THE PATENT COOPERATION TREATY (PCT)

(19) World Intellectual Property Organization
International Bureau

(43) International Publication Date
01 November 2018 (01.11.2018)

WIPO | PCT

(10) International Publication Number
WO 2018/199170 A1

(51) International Patent Classification:
G02B 7/08 (2006.01) *H01L 41/08* (2006.01)
H02N 2/02 (2006.01)

(21) International Application Number:
PCT/JP2018/016825

(22) International Filing Date:
25 April 2018 (25.04.2018)

(25) Filing Language: English

(26) Publication Language: English

(30) Priority Data:
2017-090411 28 April 2017 (28.04.2017) JP

(71) Applicant: **CANON KABUSHIKI KAISHA** [JP/JP]; 30-2,Shimomaruko 3-chome,Ohta-ku, Tokyo, 1468501 (JP).

(72) Inventors: **HAYASHI Jumpei**; C/O CANON KABUSHIKI KAISHA, 30-2,Shimomaruko 3-chome,Ohta-ku, Tokyo, 1468501 (JP). **TANAKA Hidenori**; C/O CANON KABUSHIKI KAISHA, 30-2,Shimomaruko 3-chome,Ohta-ku, Tokyo, 1468501 (JP). **WATANABE Takayuki**; C/O CANON KABUSHIKI KAISHA, 30-2,Shimomaruko 3-chome,Ohta-ku, Tokyo, 1468501 (JP). **KOYAMA Shinya**; C/O CANON KABUSHIKI KAISHA, 30-2,Shimomaruko 3-chome,Ohta-ku, Tokyo, 1468501 (JP). **FURUTA Tatsuo**; C/O CANON KABUSHIKI KAISHA, 30-2,Shimomaruko 3-chome,Ohta-ku, Tokyo, 1468501 (JP). **KUBOTA Makoto**; C/O CANON KABUSHIKI KAISHA, 30-2,Shimomaruko 3-chome,Ohta-ku, Tokyo, 1468501 (JP).

(74) Agent: **ABE TAKUMA** et al.; C/O CANON KABUSHIKI KAISHA, 30-2,Shimomaruko 3-chome,Ohta-ku, Tokyo, 1468501 (JP).

(81) Designated States *(unless otherwise indicated, for every kind of national protection available)*: AE, AG, AL, AM, AO, AT, AU, AZ, BA, BB, BG, BH, BN, BR, BW, BY, BZ, CA, CH, CL, CN, CO, CR, CU, CZ, DE, DJ, DK, DM, DO, DZ, EC, EE, EG, ES, FI, GB, GD, GE, GH, GM, GT, HN, HR, HU, ID, IL, IN, IR, IS, JO, KE, KG, KH, KN, KP, KR, KW, KZ, LA, LC, LK, LR, LS, LU, LY, MA, MD, ME, MG, MK, MN, MW, MX, MY, MZ, NA, NG, NI, NO, NZ, OM, PA, PE, PG, PH, PL, PT, QA, RO, RS, RU, RW, SA, SC, SD, SE, SG, SK, SL, SM, ST, SV, SY, TH, TJ, TM, TN, TR, TT, TZ, UA, UG, US, UZ, VC, VN, ZA, ZM, ZW.

(84) Designated States *(unless otherwise indicated, for every kind of regional protection available)*: ARIPO (BW, GH, GM, KE, LR, LS, MW, MZ, NA, RW, SD, SL, ST, SZ, TZ, UG, ZM, ZW), Eurasian (AM, AZ, BY, KG, KZ, RU, TJ, TM), European (AL, AT, BE, BG, CH, CY, CZ, DE, DK, EE, ES, FI, FR, GB, GR, HR, HU, IE, IS, IT, LT, LU, LV, MC, MK, MT, NL, NO, PL, PT, RO, RS, SE, SI, SK, SM, TR), OAPI (BF, BJ, CF, CG, CI, CM, GA, GN, GQ, GW, KM, ML, MR, NE, SN, TD, TG).

(54) Title: VIBRATOR, METHOD FOR MANUFACTURING THE SAME, VIBRATION WAVE DRIVING DEVICE, VIBRATION WAVE MOTOR, OPTICAL DEVICE, AND ELECTRONIC DEVICE

[Fig. 2A]

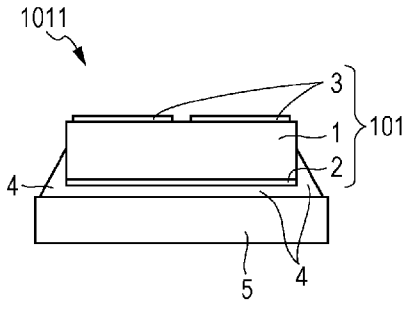

(57) Abstract: There is provided a vibrator in which peeling is less likely to occur between including a piezoelectric element and a vibration plate. A vibrator includes a piezoelectric element and a vibration plate, and the piezoelectric element includes a piezoelectric ceramic formed into a substantially rectangular parallelepiped shape, and electrodes. A portion of one or more side surfaces of the piezoelectric element and a portion of the vibration plate are covered by resin.

WO 2018/199170 A1

[Continued on next page]

Published:
— *with international search report (Art. 21(3))*
— *with amended claims (Art. 19(1))*

Description

Title of Invention: VIBRATOR, METHOD FOR MANUFACTURING THE SAME, VIBRATION WAVE DRIVING DEVICE, VIBRATION WAVE MOTOR, OPTICAL DEVICE, AND ELECTRONIC DEVICE

Technical Field

[0001] The present invention relates to a vibrator, a method for manufacturing the vibrator, and devices including the vibrator, namely, a vibration wave driving device, a vibration wave motor, an optical device, and an electronic device.

Background Art

[0002] Various studies and developments have been made for reduced size and weight of vibrators including piezoelectric elements. PTL 1 discloses a vibration-type drive device (ultrasonic motor) including a small vibrator that is driven by combined vibration using a combination of two different out-of-plane vibration modes. A vibrator typically includes a piezoelectric element and a vibration plate that adheres to the piezoelectric element with an elastic resin layer interposed therebetween.

Citation List

Patent Literature

[0003] PTL 1: Japanese Patent Laid-Open No. 2004-297910

Summary of Invention

Technical Problem

[0004] A reduction in the size of a vibrator, that is, a reduction in the size of a piezoelectric element and a vibration plate, results in an increase in the ratio of the area occupied by ends of the piezoelectric element to the area of a bonding region where the piezoelectric element and the vibration plate are bonded to each other. In the vibrator disclosed in PTL 1, which is driven by combined vibration using a combination of two different out-of-plane vibration modes, due to the driving principle, antinodal lines of vibration in the two out-of-plane vibration modes are located at the ends of the piezoelectric element. For these reasons, if a vibration wave motor including the vibrator is driven continuously, peeling is likely to occur starting from the ends of the piezoelectric element. In addition to this issue, environmental measures has recently had to be urgently taken, which require the use of lead-free piezoelectric ceramics instead of lead zirconate titanate (PZT) commonly used as a lead-based piezoelectric ceramic material of piezoelectric elements. However, piezoelectric elements using lead-free piezoelectric ceramics, which tend to be stiffer and subjected to larger temperature

changes than lead-based materials, are more likely to experience the peeling phenomenon described above because the difference in stiffness between the piezoelectric elements and vibration plates is likely to vary.

[0005] The present invention provides a vibrator with reduced occurrence of peeling between a piezoelectric element and a vibration plate thereof even when the vibrator includes a lead-free piezoelectric ceramic.

Solution to Problem

[0006] A vibrator according to an aspect of the present invention includes a piezoelectric element and a vibration plate. The piezoelectric element includes a piezoelectric ceramic formed into a substantially rectangular parallelepiped shape, and electrodes. A portion of one or more side surfaces of the piezoelectric element and a portion of the vibration plate are covered by resin.

Advantageous Effects of Invention

[0007] According to aspects of the present invention, it may be possible to provide a vibrator that is environmentally safe with reduced occurrence of peeling between a piezoelectric element and a vibration plate thereof, and a method for manufacturing the vibrator. It may also be possible to provide devices including the vibrator, namely, a vibration wave driving device, a vibration wave motor, an optical device, and an electronic device.

[0008] Further features of the present invention will become apparent from the following description of exemplary embodiments with reference to the attached drawings.

Brief Description of Drawings

[0009] [fig.1]Fig. 1 is a schematic diagram illustrating a piezoelectric element according to an embodiment of the present invention.

[fig.2A]Fig. 2A is a schematic diagram illustrating an example of a vibrator according to the embodiment of the present invention.

[fig.2B]Fig. 2B is a schematic diagram illustrating an example of the vibrator according to the embodiment of the present invention.

[fig.3A]Fig. 3A is a schematic diagram illustrating an example of the vibrator according to the embodiment of the present invention.

[fig.3B]Fig. 3B is a schematic diagram illustrating an example of the vibrator according to the embodiment of the present invention.

[fig.3C]Fig. 3C is a schematic diagram illustrating an example of the vibrator according to the embodiment of the present invention.

[fig.3D]Fig. 3D is a schematic diagram illustrating an example of the vibrator according to the embodiment of the present invention.

[fig.3E]Fig. 3E is a schematic diagram illustrating an example of the vibrator

according to the embodiment of the present invention.

[fig.3F]Fig. 3F is a schematic diagram illustrating an example of the vibrator according to the embodiment of the present invention.

[fig.4A]Fig. 4A is a schematic diagram illustrating an example of the vibrator according to the embodiment of the present invention.

[fig.4B]Fig. 4B is a schematic diagram illustrating an example of the vibrator according to the embodiment of the present invention.

[fig.5A]Fig. 5A is a schematic diagram illustrating an example of a vibrator according to a comparative example.

[fig.5B]Fig. 5B is a schematic diagram illustrating an example of the vibrator according to the comparative example.

[fig.6A]Fig. 6A is a schematic diagram illustrating an example of two out-of-plane vibration modes of the vibrator according to the embodiment of the present invention.

[fig.6B]Fig. 6B is a schematic diagram illustrating an example of the two out-of-plane vibration modes of the vibrator according to the embodiment of the present invention.

[fig.7]Fig. 7 is a schematic diagram illustrating an example of the vibrator according to the embodiment of the present invention.

[fig.8]Fig. 8 is a schematic diagram illustrating a vibration wave driving device according to an embodiment of the present invention.

[fig.9]Fig. 9 is a schematic diagram illustrating a vibration wave motor according to an embodiment of the present invention.

[fig.10]Fig. 10 is a schematic diagram illustrating an optical device according to an embodiment of the present invention.

Description of Embodiments

[0010] A vibrator according to an embodiment of the present invention includes a piezoelectric element and a vibration plate. The piezoelectric element includes a lead-free piezoelectric ceramic formed into a substantially rectangular parallelepiped shape, and electrodes. A portion of one or more side surfaces of the piezoelectric element and a portion of the vibration plate are covered by resin. An embodiment of the present invention can provide a vibrator that is environmentally safe with reduced occurrence of peeling between a piezoelectric element and a vibration plate thereof.

[0011] The vibrator according to the embodiment of the present invention includes a piezoelectric element and a vibration plate that adheres to the piezoelectric element with a resin layer interposed therebetween.

[0012] The piezoelectric element and the vibration plate adhere to each other with an elastic resin layer interposed therebetween and are integrated into a single unit. Thus, the vibrator according to the embodiment of the present invention can generate a bending

vibration traveling wave in an out-of-plane direction (hereinafter referred to as out-of-plane vibration).

[0013] Fig. 1 is a schematic diagram illustrating a piezoelectric element included in a vibrator according to an embodiment of the present invention. A piezoelectric element 101 includes a single-piece lead-free piezoelectric ceramic 1 formed into a substantially rectangular parallelepiped shape, and a plurality of electrodes (a first electrode 2 and second electrodes 3) disposed on the piezoelectric ceramic 1.

[0014] The piezoelectric ceramic 1 is a bulk (sintered body) having a substantially uniform composition, which is obtained by firing a raw material powder. The piezoelectric ceramic 1 is a ceramic that exhibits a piezoelectric constant d_{31} greater than or equal to 10 pm/V in absolute value or a piezoelectric constant d_{33} greater than or equal to 30 pC/N at 20°C when subjected to polarization processing.

[0015] The term "single-piece" refers to a seamless body having a substantially uniform composition.

[0016] The term "substantially rectangular parallelepiped shape" is used to include an exactly rectangular parallelepiped shape and any other rectangular parallelepiped-like shape such as a rectangular parallelepiped shape with chamfered sides.

[0017] The piezoelectric constant of the piezoelectric ceramic 1 can be determined by computation using the density and resonant and antiresonant frequencies of the piezoelectric ceramic 1 in accordance with the Japan Electronics and Information Technology Industries Association (JEITA) standard (EM-4501). In the following, this method is referred to as a resonance-antiresonance method.

[0018] The density of the piezoelectric ceramic 1 can be measured by using, for example, Archimedes method. The resonant frequency and the antiresonant frequency can be measured with an impedance analyzer. Instead of the resonance-antiresonance method, a piezoelectric constant measurement device that uses the Berlincourt method as a measurement principle may be used to measure the piezoelectric constant of the piezoelectric ceramic 1.

[0019] The piezoelectric ceramic 1 preferably contains a perovskite metal oxide. This is because the piezoelectric ceramic 1, which contains a perovskite metal oxide, can have a higher piezoelectric constant than any other metal oxide having a crystal structure.

[0020] The plurality of electrodes (the first electrode 2 and the second electrodes 3) are each made of a conductive material having a thickness of about 5 nm to 10 μm. This is because the plurality of electrodes serve to apply voltages to the piezoelectric ceramic 1. The material of the plurality of electrodes is not particularly limited, and examples of the material include metals such as Ti, Pt, Au, Ni, Pd, Ag, and Cu, and compounds thereof. A silver paste is preferably used since it has low cost and sufficient conductivity. When a silver paste is used, the plurality of electrodes can be produced by

applying the silver paste to the piezoelectric ceramic 1 in a desired pattern and drying or burning the piezoelectric ceramic 1. The first electrode 2 can be used as a common ground electrode, for example, and the second electrodes 3 can be used as electrodes for applying drive voltages, for example.

[0021] Figs. 2A and 2B are schematic diagrams illustrating the vibrator according to the embodiment of the present invention. A resin layer 4 extends from a bonding region where the piezoelectric element 101 and a vibration plate 5 are bonded to each other and covers at least a portion of one or more side surfaces of the piezoelectric element 101, which are approximately perpendicular to a surface of the piezoelectric element 101 that adheres to the vibration plate 5. This configuration can prevent the occurrence of peeling between the piezoelectric element 101 and the vibration plate 5.

[0022] The bonding region represents a region 41 illustrated in Fig. 2B where the surface of the piezoelectric element 101 that adheres to the vibration plate 5 (this surface is hereinafter referred to as the adhering surface) is in contact with the vibration plate 5. When the piezoelectric element 101 is smaller than the vibration plate 5, the area of the adhering surface represents the area of the bonding region. If the vibration plate 5 has a hole such as a through-hole, the area of the bonding region is determined by subtracting the area of the hole from the area of the adhering surface.

[0023] In the vibrator according to the embodiment of the present invention, resin may be disposed in a region where the vibration plate 5 and the piezoelectric element 101 face each other, and an area coverage ratio that is a ratio of an area of the resin disposed in the region to an area of the region is preferably greater than or equal to 60%.

[0024] Setting the area coverage ratio to be within the range described above can result in it being less likely that peeling will occur between the piezoelectric element 101 and the vibration plate 5. The area coverage ratio can be measured by using, for example, a photographic image obtained by an ultrasonic imaging device. If the area coverage ratio is less than 60%, the adherence of the piezoelectric element 101 to the vibration plate 5 may be insufficient, which can result in it being more likely that peeling will occur between the piezoelectric element 101 and the vibration plate 5.

[0025] Figs. 3A to 3F are schematic diagrams illustrating the vibrator according to the embodiment of the present invention, as viewed from a different angle from that illustrated in Figs. 2A and 2B.

[0026] Fig. 3A illustrates a vibrator 1011 as viewed from a surface of the piezoelectric element 101 having the second electrodes 3. As illustrated in Fig. 3A, at least a portion of one or more side surfaces of the piezoelectric element 101 is covered by the resin layer 4, which can result in it being less likely that the vibrator 1011 will have peeling between the piezoelectric element 101 and the vibration plate 5. The term "side surfaces of the piezoelectric element approximately perpendicular to the adhering

surface" refers to four surfaces other than the adhering surface and a surface opposite the adhering surface, that is, four surfaces of the piezoelectric element other than the surface having the first electrode 2 and the surface having the second electrodes 3.

[0027] Figs. 3B, 3C, and 3D also illustrate the vibrator 1011 as viewed from the surface of the piezoelectric element 101 having the second electrodes 3. As illustrated in Figs. 3B and 3C, the resin layer 4 preferably covers a pair of opposing side surfaces of the piezoelectric element 101. Since the piezoelectric element 101 included in the vibrator 1011 has a single-piece substantially rectangular parallelepiped shape, symmetrical vibration (vibration having line symmetry) is generated in the vibrator 1011 in the long-side and short-side directions of the piezoelectric element 101 in accordance with the expansion and contraction of the piezoelectric element 101. Thus, a pair of opposing side surfaces of the piezoelectric element 101 is covered by the resin layer 4, which provides efficient vibration that is not affected by vibration other than desired vibration (i.e., unwanted vibration) without impairing symmetry of vibration. As a result, it can be less likely that peeling will occur between the piezoelectric element 101 and the vibration plate 5. More preferably, as illustrated in Fig. 3D, the resin layer 4 covers all the side surfaces of the piezoelectric element 101.

[0028] Figs. 3E and 3F also illustrate the vibrator 1011 as viewed from the surface of the piezoelectric element 101 having the second electrodes 3. The resin layer 4 may cover some of the side surfaces of the piezoelectric element 101 in the manner illustrated in Fig. 3F or may cover three side surfaces of the piezoelectric element 101 in the manner illustrated in Fig. 3E.

[0029] In the vibrator according to the embodiment of the present invention, the ratio of the maximum height of resin disposed in a portion of a side surface of the piezoelectric element 101 to the height of the side surface of the piezoelectric element 101 is preferably greater than or equal to 5% and less than or equal to 70%. Setting the ratio of the maximum height of resin to the height of the piezoelectric element 101 to be within the range described above can result in it being less likely that peeling will occur between the piezoelectric element 101 and the vibration plate 5. The ratio of the maximum height of resin to the height of the piezoelectric element 101 will be described with reference to Figs. 4A and 4B. Fig. 4A is a schematic sectional view of the vibrator according to the embodiment of the present invention, as viewed from the long-side side of the adhering surface of the piezoelectric element 101. In Fig. 4A, the resin layer 4 extends on the short-side side of the adhering surface of the piezoelectric element 101. Fig. 4B is a schematic diagram illustrating the vibrator according to the embodiment of the present invention, as viewed from the long-side side of the adhering surface of the piezoelectric element 101. In Fig. 4B, the resin layer 4 extends on the long-side side of the adhering surface of the piezoelectric element 101. The ratio of the

maximum height of resin to the height of the piezoelectric element 101 is defined as the ratio of a maximum height B of the resin layer 4 to a length A of a side surface of the piezoelectric element 101 in a height direction of the piezoelectric element 101. A ratio greater than 70% may hinder the vibration of the vibrator 1011. Figs. 5A and 5B are schematic sectional views of a vibrator according to a comparative example, which is not included in the present invention, as viewed from the long-side side of the adhering surface of the piezoelectric element 101, and illustrate a ratio less than 5%, by way of example. In an example illustrated in Fig. 5B, the piezoelectric ceramic 1, which has been subjected to a so-called chamfering process, is illustrated. In Figs. 5A and 5B, the resin layer 4 covers none of the side surfaces of the piezoelectric element 101. A ratio less than 5% may cause insufficient adherence of the piezoelectric element 101 to the vibration plate 5, which can result in it being more likely that peeling will occur between the piezoelectric element 101 and the vibration plate 5. The ratio of the maximum height of resin to the height of the piezoelectric element 101 can be measured by using, for example, a photographic image obtained with an optical microscope.

[0030] In the vibrator according to the embodiment of the present invention, resin disposed in a region where the vibration plate 5 and the piezoelectric element 101 face each other preferably has a maximum thickness of greater than or equal to 0.5 μm and less than or equal to 10 μm. Setting the maximum thickness to be within the range described above can result in a sufficient mechanical strength of the resin layer 4. In addition, vibration generated from the piezoelectric element 101 can be efficiently transmitted to the vibration plate 5. The maximum thickness can be determined by measuring a cross section of the vibrator 1011 by using a photographic image obtained with, for example, a scanning electron microscope (hereinafter referred to as an SEM). If the maximum thickness is greater than 10 μm, vibration generated from the piezoelectric element 101 may not sufficiently be transmitted to the vibration plate 5. If the maximum thickness is less than 0.5 μm, in contrast, the mechanical strength of the resin layer 4 may be insufficient, which can result in it being more likely that peeling will occur between the piezoelectric element 101 and the vibration plate 5.

[0031] In the vibrator according to the embodiment of the present invention, furthermore, the resin layer 4 is preferably disposed only on a flat surface of the vibration plate 5 that faces the piezoelectric element 101. This configuration enables vibration generated in accordance with the expansion and contraction of the piezoelectric element 101 to be efficiently transmitted to the vibration plate 5. If the resin layer 4 is located out of the plane of the vibration plate 5, the vibration generated in accordance with the expansion and contraction of the piezoelectric element 101 may not be sufficiently transmitted to the vibration plate 5.

[0032] The resin layer 4 preferably includes epoxy-based resin. An epoxy-based resin has higher water resistance and heat resistance than any other resin.

[0033] The thickness of the piezoelectric ceramic 1 in a direction extending along the side surfaces of the piezoelectric element 101 is preferably greater than or equal to 0.28 mm and less than or equal to 2.0 mm. Setting the thickness to be within the range described above can result in a sufficient mechanical strength of the piezoelectric ceramic 1 and can provide efficient transmission of vibration generated from the piezoelectric element 101 to the vibration plate 5. If the thickness is greater than 2.0 mm, the required voltage for causing the piezoelectric element 101 to vibrate may be increased. If the thickness is less than 0.28 mm, in contrast, the mechanical strength of the piezoelectric ceramic 1 may be insufficient.

[0034] In the vibrator according to the embodiment of the present invention, preferably, the vibration plate 5 generates two nodal lines of a first vibration mode (vibration mode A) such that the two nodal lines do not intersect each other and three nodal lines of a second vibration mode (vibration mode B) such that the three nodal lines do not intersect each other, and the two nodal lines of the first vibration mode intersect the three nodal lines of the second vibration mode. In addition, the resin layer 4 preferably covers a portion where at least either antinodal lines of the first vibration mode or antinodal lines of the second vibration mode are generated.

[0035] Figs. 6A and 6B are schematic diagrams illustrating out-of-plane vibration modes of the vibrator according to the embodiment of the present invention. The vibration plate 5 has projection portions 51. The projection portions 51 allow vibration generated by the vibrator 1011 to be efficiently transmitted to a contact body (e.g., a driven body described below).

[0036] The out-of-plane vibration mode illustrated in Fig. 6A is one of the two out-of-plane vibration modes (this out-of-plane vibration mode is hereinafter referred to as mode A). The mode A is the first-order out-of-plane vibration mode in the short-side direction (arrow Y direction) of the substantially rectangular parallelepiped (rectangular) vibrator 1011 and has two nodal lines substantially parallel to the long-side direction (arrow X direction) of the vibrator 1011. The two nodal lines do not intersect each other.

[0037] In the vibrator according to the embodiment of the present invention, preferably, the vibration plate 5 includes a plate portion and a support portion, and the plate portion and the support portion are integrated into a single unit. Fig. 7 is a schematic diagram illustrating the vibrator according to the embodiment of the present invention. The vibrator includes support portions 6. The support portions 6, which are located out of the plane of the vibration plate 5, are connected to the vibration plate 5 and are made of the same material as that of the vibration plate 5. This configuration allows the vibrator

to be applied to a piezoelectric device such as a vibration wave motor described below without hindering vibration generated from the vibrator. As illustrated in Fig. 7, each of the support portions 6 has a hole into which a fixing portion fits, thereby providing a piezoelectric device with diverse structural designs.

[0038] The piezoelectric ceramic 1 preferably has a lead content less than 1000 ppm. That is, the piezoelectric ceramic 1 is preferably a lead-free piezoelectric ceramic. Most existing piezoelectric ceramics contain lead zirconate titanate (PZT) as a main component. Thus, it has been noted that, for example, if a piezoelectric element including such a piezoelectric ceramic is disposed of and subjected to acid rain or left exposed to severe environmental conditions, the lead component in the piezoelectric ceramic can be absorbed and precipitated in the soil and can disrupt an ecosystem's nature balance. However, if a piezoelectric element with a lead content less than 1000 ppm is disposed of and subjected to acid rain or left exposed to severe environmental conditions, the influences of the lead component included in the piezoelectric ceramic on the environment are negligible. The lead content of the piezoelectric ceramic can be measured by using the weight of lead relative to the total weight of the piezoelectric ceramic, which is determined by using X-ray fluorescence (XRF) analysis or inductively-coupled plasma (ICP) emission spectroscopic analysis, for example.

[0039] The piezoelectric ceramic 1 preferably includes barium titanate or a substitute therefor in terms of high piezoelectric constant and comparatively easy manufacturing. Examples of barium titanate or a substitute therefor include compositions such as barium titanate ($BaTiO_3$), barium calcium titanate ((Ba, Ca)TiO_3), barium zirconate titanate (Ba(Ti, Zr)O_3), barium calcium zirconate titanate ((Ba, Ca)(Ti, Zr)O_3), sodium niobate-barium titanate ($NaNbO_3$-$BaTiO_3$), bismuth sodium titanate-barium titanate ((Bi, Na)TiO_3-$BaTiO_3$), and bismuth potassium titanate-barium titanate ((Bi, K)TiO_3 - $BaTiO_3$), and materials containing these compositions as main components. Above all, barium calcium zirconate titanate ((Ba, Ca)(Ti, Zr)O_3) or sodium niobate-barium titanate ($NaNbO_3$-$BaTiO_3$) is preferably contained as a main component, in terms of achievement of both the piezoelectric constant and mechanical quality factor of the piezoelectric ceramic 1. In terms of enhanced mechanical quality factor or insulation, the piezoelectric ceramic 1 preferably contains manganese or bismuth as an element other than a main component.

Method for Manufacturing Vibrator

[0040] While a method for manufacturing a vibrator according to an embodiment of the present invention is not particularly limited, a typical method will be described hereinafter.

[0041] A piezoelectric element included in the vibrator is obtained by providing a single-piece piezoelectric ceramic formed into a substantially rectangular parallelepiped shape

with a plurality of electrodes. The single-piece piezoelectric ceramic formed into a substantially rectangular parallelepiped shape is obtained by, for example, firing a raw material powder having a desired metal element and processing the resulting sintered body into a desired shape. The plurality of electrodes can be disposed on the single-piece piezoelectric ceramic formed into a substantially rectangular parallelepiped shape by, for example, sputtering or applying a metal paste and drying or burning the piezoelectric ceramic.

[0042] The piezoelectric element needs to be subjected to polarization processing to exhibit piezoelectricity. The polarization processing may be performed before or after a step of causing the piezoelectric element to adhere to the vibration plate described below. Note that when the polarization processing is performed before the adhering step, the subsequent steps need to be performed at a temperature less than or equal to the Curie temperature of the piezoelectric ceramic. The reason for this is to avoid depolarization of the piezoelectric ceramic to prevent piezoelectricity from being lost.

[0043] Then, the piezoelectric element is made to adhere to the vibration plate. In the adhering process, for example, a resin precursor having flowability is applied to a bonding surface of the piezoelectric element or the vibrator. The term "flowability", as used herein, refers to the unstable, flowing ability. The resin precursor is a resin before being cured, which indicates a liquid adhesive. The adhesive may be a so-called one- or two-part adhesive. In addition, the resin precursor may be applied to either the bonding surface of the piezoelectric element or the bonding surface of the vibrator.

[0044] Then, the resin precursor is cured. In the curing process, the piezoelectric element and the vibration plate are brought into pressure contact with each other with the resin-precursor-applied surface interposed therebetween. If a sufficient amount of the resin precursor is applied, pressure contact between the piezoelectric element and the vibration plate enables the resin precursor to protrude from the adhering surface toward at least a portion of the side surfaces of the piezoelectric element approximately perpendicular to the adhering surface. If an insufficient amount of the resin precursor is applied, the resin precursor does not protrude toward the side surfaces, which is not desirable. Examples of a method for allowing the resin precursor to protrude toward a desired side surface include inclining the resin-precursor-applied surface in a desired direction from the horizontal direction, and disposing the piezoelectric element at an end of the vibration plate to prevent the resin precursor from protruding toward the end of the vibration plate. Other examples include making the vibration plate water-repellent to prevent the resin precursor from protruding toward a specific surface, and removing a protrusion of the resin precursor. In the pressure contact process, a certain amount of pressure such that prevents the piezoelectric element from moving relative to the vibration plate and that ensures that the piezoelectric element is not cracked

needs to be applied. When the resin precursor is a thermosetting adhesive, the vibrator is heated with the piezoelectric element and the vibration plate being brought into pressure contact, thereby reducing the curing time. In the heating process, as described above, the heating temperature needs to be determined taking into account the Curie temperature of the piezoelectric ceramic.

[0045] The plurality of electrodes may also be provided with a power feeding member, if necessary. The power feeding member provides electrical continuity between a voltage input unit (e.g., a power supply) and the vibrator.

Vibration Wave Driving Device

[0046] A vibration wave driving device according to an embodiment of the present invention includes the vibrator described above and a power feeding member. With this configuration, a vibration wave driving device can be provided in which peeling is less likely to occur between a piezoelectric element and a vibration plate.

[0047] Fig. 8 is a schematic diagram illustrating a vibration wave driving device according to an embodiment of the present invention. As illustrated in Fig. 8, voltage input units 9 are provided to apply voltages to the vibrator 1011 through a power feeding member 7 and through electrical wiring 71 included in the power feeding member 7. The piezoelectric element 101 includes two drive phase electrodes 31. An alternating voltage V1 is applied to the right-hand drive phase electrode 31, and an alternating voltage V2 is applied to the left-hand drive phase electrode 31.

[0048] When the alternating voltages V1 and V2 are applied at a frequency near the resonant frequency of the mode A in such a manner as to have the same amplitude and phase, the entirety of the piezoelectric element 101 (the drive phase electrodes 31) expands and contracts. As a result, the vibrator 1011 generates vibration of the mode A. When the alternating voltages V1 and V2 are applied at a frequency near the resonant frequency of the mode B in such a manner as to have the same amplitude and phases that are shifted by 180°, the portion of the piezoelectric element 101 corresponding to the right-hand drive phase electrode 31 contracts. Along with this, the portion of the piezoelectric element 101 corresponding to the left-hand drive phase electrode 31 expands, or the portion of the piezoelectric element 101 corresponding to the left-hand drive phase electrode 31 contracts, along with which the portion of the piezoelectric element 101 corresponding to the right-hand drive phase electrode 31 expands. As a result, the vibrator 1011 generates vibration of the mode B. In this way, when only each mode is generated, the resonant frequency of the mode can be measured with an impedance analyzer, for example.

[0049] At this time, if the phase difference between the alternating voltages V1 and V2 is a phase difference θ between 0° and 180° ($0° < \theta < 180°$), composite vectors (V1 + V2) and (V1 - V2) are orthogonal. This indicates that vibration of the mode A and vibration

of the mode B are simultaneously generated and the phase difference between the two vibrations is shifted by 90°.

[0050] That is, the alternating voltages V1 and V2 have the same amplitude and have a phase difference θ other than 0° and 180° satisfying $0° < \theta < 180°$, thereby simultaneously generating vibration of the mode A and vibration of the mode B. In addition, the phase difference θ between the alternating voltages V1 and V2 is changed, thereby changing the amplitudes of the vibrations of the mode A and the mode B.

Vibration Wave Motor

[0051] A vibration wave motor according to an embodiment of the present invention includes the vibration wave driving device described above and a movable body that is in contact with the vibration plate. With this configuration, a vibration wave motor can be provided in which peeling is less likely to occur between a piezoelectric element and a vibration plate.

[0052] Fig. 9 is a schematic diagram illustrating a vibration wave motor according to an embodiment of the present invention. As illustrated in Fig. 9, a driven body (slider) 8 is disposed on the vibration plate 5 with the projection portions 51 interposed therebetween. The two projection portions 51 are preferably arranged symmetrically about an XZ plane or YZ plane passing through the center of the vibration plate 5. Thus, the reaction forces received at the projection portions 51 by the vibrator 1011 from the driven body (slider) 8 are made balanced. The driven body (slider) 8 is preferably brought into pressure contact with the leading ends of the projection portions 51. This enables the driven body (slider) 8 to move in directions indicated by an arrow in response to the elliptical motion of the projection portions 51.

Optical Device

[0053] An optical device according to an embodiment of the present invention includes the vibration wave motor described above and an optical member dynamically coupled to the movable body. In the present invention, the term "being dynamically coupled" refers to a state in which two members are directly in contact with each other such that a force generated by coordinate fluctuations, volume change, or shape change of one of the members can be transferred to the other member or a state in which two members are in contact with each other via a third member interposed therebetween. The vibration wave motor described above, the movable body, and the optical member are dynamically coupled to each other, thereby providing an optical device in which peeling is less likely to occur between a piezoelectric element and a vibration plate.

[0054] Fig. 10 is a schematic diagram illustrating an optical device (focus lens unit in a lens barrel device) according to an embodiment of the present invention. In Fig. 10, the driven body (slider) 8 is brought into pressure contact with the vibrator 1011. The

power feeding member 7 is disposed on the side of the vibrator 1011 close to the surface of the piezoelectric element 101 (not illustrated) having the second electrodes 3 (not illustrated). When desired voltages are applied to the vibrator 1011 from the voltage input units 9 (not illustrated) through the power feeding member 7, an elliptical motion is generated at the projection portions 51 (not illustrated) of the vibration plate 5.

[0055] A holding member 11 is fixed to the vibrator 1011 by welding or the like so as not to generate unnecessary vibration. A movable housing 12 is fixed to the holding member 11 by using screws 13 and is integrated with the vibrator 1011 into a single unit. These members form a vibration wave motor (ultrasonic motor). The movable housing 12 is attached to two guide members 14, thereby enabling the vibration wave motor to move in a straight line along the guide members 14 in both directions (the forward and reverse directions).

[0056] Next, a description will be given of a lens 16 (optical member) that serves as a focus lens of the lens barrel device. The lens 16 is fixed to a lens holding member 15 and has an optical axis (not illustrated) parallel to the movement direction of the vibration wave motor. Like the vibration wave motor, the lens holding member 15 moves in a straight line along the two guide members 14, described below, thereby performing focal position adjustment (focus operation). The two guide members 14 are members that enable the movable housing 12 and the lens holding member 15 to fit in with each other such that the movable housing 12 and the lens holding member 15 can move in a straight line. This configuration enables the movable housing 12 and the lens holding member 15 to move in a straight line along the guide members 14.

[0057] A coupling member 17 is a member that transmits a driving force generated by the vibration wave motor to the lens holding member 15. The coupling member 17 is attached to the lens holding member 15 so as to fit in with the lens holding member 15. This enables the lens holding member 15 to smoothly move in both directions along the two guide members 14 together with the movable housing 12.

[0058] A sensor 18 reads position information of a scale 19 stuck on a side surface portion of the lens holding member 15 to detect the position of the lens holding member 15 on the guide members 14.

[0059] The members described above are assembled in the manner described above to construct a focus lens unit in a lens barrel device.

[0060] While an optical device has been described in the context of a lens barrel device for a single-lens reflex camera, a variety of optical devices including a vibration wave motor, such as a compact camera in which a lens and a camera body are formed into a single unit and an electronic still camera, may be used, regardless of the type of camera.

Examples

[0061] A vibrator, a method for manufacturing the vibrator, a vibration wave driving device, a vibration wave motor, and an optical device according to embodiments of the present invention will be described hereinafter with reference to examples. However, the present invention is not limited to the following examples.

Example 1

[0062] First, a piezoelectric ceramic was produced by firing a metal oxide powder. As a result of measuring the composition of the piezoelectric ceramic by using X-ray fluorescence (XRF) analysis, 0.16 parts by weight of Mn in terms of metal relative to 100 parts by weight of $(Ba_{0.85}Ca_{0.15})(Ti_{0.93}Zr_{0.07})O_3$ were contained, and a lead content was less than 1000 ppm. Subsequently, analysis of the crystal structure of the piezoelectric ceramic by using X-ray diffraction (XRD) measurement indicated a perovskite structure. That is, the piezoelectric ceramic contained a perovskite metal oxide composed of a substitute for barium titanate.

[0063] Then, after the piezoelectric ceramic was ground and polished to a thickness of 0.36 mm, the piezoelectric ceramic was cut into pieces of 8.7×5.7 mm^2 in size to obtain a single-piece piezoelectric ceramic formed into a substantially rectangular parallelepiped shape. A silver paste was applied to both surfaces of the piezoelectric ceramic to form drive phase electrodes and a ground electrode, as illustrated in Fig. 8, by using screen printing to produce a piezoelectric element. The ground electrode provides electrical continuity between the front and rear surfaces of the piezoelectric element via a wrap-around electrode.

[0064] Then, a vibration plate was caused to adhere to the piezoelectric element with a resin layer interposed therebetween.

[0065] The vibration plate, which was made of magnetic stainless steel JIS SUS420J2 and had dimensions of $9.0 \times 5.8 \times 0.3$ mm^3, was used. Further, the vibration plate was provided with support portions out of a plane thereof and projection portions in the plane thereof, as illustrated in Fig. 7. An epoxy-based liquid adhesive (with a glass transition temperature of 120°C) was used as a resin precursor, and a sufficient amount of the resin precursor was applied to a bonding surface of the vibration plate by using a dispenser. Then, a ground electrode surface of the piezoelectric element and the vibration plate were brought into pressure contact with each other for 3 minutes, and the resin precursor was caused to extend from a bonding region to cover a pair of opposing side surface portions of the piezoelectric element. However, the resin precursor was not caused to extend out of the plane of the vibration plate. The piezoelectric element and the vibration plate were placed into a drying oven in this state and were held at 130°C for 60 minutes to cure the resin precursor, thereby forming a resin

layer.

[0066] Subsequently, as illustrated in Fig. 8, a power feeding member for the drive phase electrodes and the ground electrode was formed, by thermocompression bonding, on the surface of the piezoelectric element having the second electrodes to which the vibration plate did not adhere. Specifically, the power feeding member, which was formed of a flexible cable, was connected to the piezoelectric element by using an anisotropic conductive film (ACF). The conditions for thermocompression bonding were a duration of 10 seconds and a pressure of 2 MPa.

[0067] Then, the piezoelectric ceramic was subjected to polarization processing at 100°C. Specifically, each of the two drive phase electrodes of the piezoelectric element was brought into contact with a contact pin for polarization to apply a voltage by using the vibration plate as ground. At this time, direct-current voltages were applied to the piezoelectric ceramic for 30 minutes to achieve a field strength of 1.0 kV/mm.

[0068] As a result of the steps described above, a vibrator A according to the present invention (hereinafter referred to as the vibrator A) was obtained.

[0069] Then, to measure the shape of the resin layer of the vibrator A, the resin layer was observed with an optical microscope from the surface having the drive phase electrodes. As a result, as illustrated in Fig. 3D, the resin layer covered all the side surfaces.

[0070] Subsequently, a photographic image was obtained with an ultrasonic imaging device (manufactured by Hitachi Construction Machinery Co., Ltd. and commercially available under the name FS300) to measure the area coverage ratio of the resin layer within the bonding region of the vibrator A. As a result of image analysis, the area coverage ratio was 98%.

[0071] Further, the ratio of the maximum height of a resin layer formed in a portion of a side surface of the piezoelectric element of the vibrator A to the height of the side surface of the piezoelectric element, the maximum thickness of a resin layer formed in a region where the vibration plate and the piezoelectric element face each other, and the thickness of the piezoelectric ceramic in a direction extending along the side surfaces of the piezoelectric element were measured. For the purpose of the measurement, one of vibrators A was cut along a direction parallel to the long sides of the piezoelectric ceramic and the cross section of the vibrator A was observed with an SEM. As a result, the ratio of the maximum height of a resin layer formed in a portion of a side surface of the piezoelectric element to the height of the side surface of the piezoelectric element was 65%, and the maximum thickness of a resin layer formed in a region where the vibration plate and the piezoelectric element face each other was 4.2 μm. Further, the thickness of the piezoelectric ceramic in a direction extending along the side surfaces of the piezoelectric element body was 0.35 mm.

[0072] Subsequently, voltage input units were connected to the vibrator A via the power feeding member to produce a vibration wave driving device A as illustrated in Fig. 8.

[0073] The alternating voltages V1 and V2 (each having an amplitude of 10 Vpp) were applied to the vibration wave driving device A via the drive phase electrodes, and the displacement of the vibrator A was measured with a laser-Doppler vibrometer. First, when the phase difference between the alternating voltages V1 and V2 was set to 0°, out-of-plane vibration mode A with two nodal lines was generated in the vibrator A. Then, when the phase difference between the alternating voltages V1 and V2 was set to 180°, out-of-plane vibration mode B with three nodal lines, which was substantially perpendicular to the out-of-plane vibration mode A, was generated in the vibrator A. The results described above indicated that the resin layer of the vibrator A covered the antinodal lines of the vibration mode A and the antinodal lines of the vibration mode B.

Example 2

[0074] A vibrator B was produced through steps similar to those in Example 1, except that a resin layer protruding in the long-side direction of the piezoelectric element was removed before the resin layer was cured.

[0075] Then, the shape of the resin layer of the vibrator B was measured through a step similar to that in Example 1. As a result, as illustrated in Fig. 3C, the resin layer covered a pair of opposing side surface portions.

[0076] Subsequently, the area coverage ratio of the resin layer within the bonding region of the vibrator B was measured through a step similar to that in Example 1. As a result of image analysis, the area coverage ratio was 95%.

[0077] Further, the ratio of the maximum height of a resin layer formed in a portion of a side surface of the piezoelectric element of the vibrator B to the height of the side surface of the piezoelectric element was measured through a step similar to that in Example 1. In addition, the maximum thickness of a resin layer formed in a region where the vibration plate and the piezoelectric element face each other, and the thickness of the piezoelectric ceramic in a direction extending along the side surfaces of the piezoelectric element were measured. As a result, the ratio of the maximum height of a resin layer formed in a portion of a side surface of the piezoelectric element to the height of the side surface of the piezoelectric element was 61%, and the maximum thickness of a resin layer formed in a region where the vibration plate and the piezoelectric element face each other was 4.2 μm. Further, the thickness of the piezoelectric ceramic in a direction extending along the side surfaces of the piezoelectric element was 0.35 mm.

[0078] Subsequently, a vibration wave driving device B as illustrated in Fig. 8 was produced through a step similar to that in Example 1.

[0079] The alternating voltages V1 and V2 (each having an amplitude of 10 Vpp) were applied to the vibration wave driving device B via the drive phase electrodes, and the displacement of the vibrator B was measured with a laser-Doppler vibrometer. As a result, the resin layer of the vibrator B was found to cover the antinodal lines of the vibration mode B.

Example 3

[0080] A vibrator C was produced through steps similar to those in Example 1, except that a resin layer protruding in the short-side direction of the piezoelectric element was removed before the resin layer was cured.

[0081] Then, the shape of the resin layer of the vibrator C was measured through a step similar to that in Example 1. As a result, as illustrated in Fig. 3B, the resin layer covered a pair of opposing side surface portions.

[0082] Subsequently, the area coverage ratio of the resin layer within the bonding region of the vibrator C was measured through a step similar to that in Example 1. As a result of image analysis, the area coverage ratio was 96%.

[0083] Further, the ratio of the maximum height of a resin layer formed in a portion of a side surface of the piezoelectric element of the vibrator C to the height of the side surface of the piezoelectric element was measured through a step similar to that in Example 1. In addition, the maximum thickness of a resin layer formed in a region where the vibration plate and the piezoelectric element face each other, and the thickness of the piezoelectric ceramic in a direction extending along the side surfaces of the piezoelectric element were measured. As a result, the ratio of the maximum height of a resin layer formed in a portion of a side surface of the piezoelectric element to the height of the side surface of the piezoelectric element was 61%, and the maximum thickness of a resin layer formed in a region where the vibration plate and the piezoelectric element face each other was 4.2 μm. Further, the thickness of the piezoelectric ceramic in a direction extending along the side surfaces of the piezoelectric element was 0.36 mm.

[0084] Subsequently, a vibration wave driving device C as illustrated in Fig. 8 was produced through a step similar to that in Example 1.

[0085] The alternating voltages V1 and V2 (each having an amplitude of 10 Vpp) were applied to the vibration wave driving device C via the drive phase electrodes, and the displacement of the vibrator C was measured with a laser-Doppler vibrometer. As a result, the resin layer of the vibrator C was found to cover the antinodal lines of the vibration mode A.

Example 4

[0086] A vibrator D was produced through steps similar to those in Example 1, except that a resin layer protruding in the short-side direction of the piezoelectric element was

removed before the resin layer was cured.

[0087] Then, the shape of the resin layer of the vibrator D was measured through a step similar to that in Example 1. As a result, as illustrated in Fig. 3A, the resin layer covered at least a portion of the side surfaces.

[0088] Subsequently, the area coverage ratio of the resin layer within the bonding region of the vibrator D was measured through a step similar to that in Example 1. As a result of image analysis, the area coverage ratio was 97%.

[0089] Further, the ratio of the maximum height of a resin layer formed in a portion of a side surface of the piezoelectric element of the vibrator D to the height of the side surface of the piezoelectric element was measured through a step similar to that in Example 1. In addition, the maximum thickness of a resin layer formed in a region where the vibration plate and the piezoelectric element face each other, and the thickness of the piezoelectric ceramic in a direction extending along the side surfaces of the piezoelectric element were measured. As a result, the ratio of the maximum height of a resin layer formed in a portion of a side surface of the piezoelectric element to the height of the side surface of the piezoelectric element was 60%. Further, the maximum thickness of a resin layer formed in a region where the vibration plate and the piezoelectric element face each other was 6.1 μm, and the thickness of the piezoelectric ceramic in a direction extending along the side surfaces of the piezoelectric element was 0.34 mm.

[0090] Subsequently, a vibration wave driving device D as illustrated in Fig. 8 was produced through a step similar to that in Example 1.

[0091] The alternating voltages V1 and V2 (each having an amplitude of 10 Vpp) were applied to the vibration wave driving device D via the drive phase electrodes, and the displacement of the vibrator D was measured with a laser-Doppler vibrometer. As a result, the resin layer of the vibrator D was found to cover the antinodal lines of the vibration mode A.

Example 5

[0092] A vibrator E was produced through steps similar to those in Example 1, except that the piezoelectric element and the vibration plate were brought into pressure contact for 5 minutes.

[0093] Then, the shape of the resin layer of the vibrator E was measured through a step similar to that in Example 1. As a result, as illustrated in Fig. 3D, the resin layer covered all the side surfaces.

[0094] Subsequently, the area coverage ratio of the resin layer within the bonding region of the vibrator E was measured through a step similar to that in Example 1. As a result of image analysis, the area coverage ratio was 58%.

[0095] Further, the ratio of the maximum height of a resin layer formed in a portion of a side

surface of the piezoelectric element of the vibrator E to the height of the side surface of the piezoelectric element was measured through a step similar to that in Example 1. In addition, the maximum thickness of a resin layer formed in a region where the vibration plate and the piezoelectric element face each other, and the thickness of the piezoelectric ceramic in a direction extending along the side surfaces of the piezoelectric element were measured. As a result, the ratio of the maximum height of a resin layer formed in a portion of a side surface of the piezoelectric element to the height of the side surface of the piezoelectric element was 65%. Further, the maximum thickness of a resin layer formed in a region where the vibration plate and the piezoelectric element face each other was 5.3 μm, and the thickness of the piezoelectric ceramic in a direction extending along the side surfaces of the piezoelectric element was 0.35 mm.

[0096] Subsequently, a vibration wave driving device E as illustrated in Fig. 8 was produced through a step similar to that in Example 1.

[0097] The alternating voltages V1 and V2 (each having an amplitude of 10 Vpp) were applied to the vibration wave driving device E via the drive phase electrodes, and the displacement of the vibrator E was measured with a laser-Doppler vibrometer. As a result, the resin layer of the vibrator E was found to cover the antinodal lines of the vibration mode A and the antinodal lines of the vibration mode B.

Example 6

[0098] A vibrator F was produced through steps similar to those in Example 1, except that the piezoelectric element and the vibration plate were brought into pressure contact for 1 minute.

[0099] Then, the shape of the resin layer of the vibrator F was measured through a step similar to that in Example 1. As a result, as illustrated in Fig. 3D, the resin layer covered all the side surfaces.

[0100] Subsequently, the area coverage ratio of the resin layer within the bonding region of the vibrator F was measured through a step similar to that in Example 1. As a result of image analysis, the area coverage ratio was 65%.

[0101] Further, the ratio of the maximum height of a resin layer formed in a portion of a side surface of the piezoelectric element of the vibrator F to the height of the side surface of the piezoelectric element was measured through a step similar to that in Example 1. In addition, the maximum thickness of a resin layer formed in a region where the vibration plate and the piezoelectric element face each other, and the thickness of the piezoelectric ceramic in a direction extending along the side surfaces of the piezoelectric element were measured. As a result, the ratio of the maximum height of a resin layer formed in a portion of a side surface of the piezoelectric element to the height of the side surface of the piezoelectric element was 4%. Further, the maximum thickness

of a resin layer formed in a region where the vibration plate and the piezoelectric element face each other was 2.8 μm, and the thickness of the piezoelectric ceramic in a direction extending along the side surfaces of the piezoelectric element was 0.35 mm.

[0102] Subsequently, a vibration wave driving device F as illustrated in Fig. 8 was produced through a step similar to that in Example 1.

[0103] The alternating voltages V1 and V2 (each having an amplitude of 10 Vpp) were applied to the vibration wave driving device F via the drive phase electrodes, and the displacement of the vibrator F was measured with a laser-Doppler vibrometer. As a result, the resin layer of the vibrator F was found to cover the antinodal lines of the vibration mode A and the antinodal lines of the vibration mode B.

Example 7

[0104] A vibrator G was produced through steps similar to those in Example 6, except that the amount of the resin precursor was reduced by 20% when the piezoelectric element and the vibration plate were brought into pressure contact.

[0105] Then, the shape of the resin layer of the vibrator G was measured through a step similar to that in Example 1. As a result, as illustrated in Fig. 3D, the resin layer covered all the side surfaces.

[0106] Subsequently, the area coverage ratio of the resin layer within the bonding region of the vibrator G was measured through a step similar to that in Example 1. As a result of image analysis, the area coverage ratio was 92%.

[0107] Further, the ratio of the maximum height of a resin layer formed in a portion of a side surface of the piezoelectric element of the vibrator G to the height of the side surface of the piezoelectric element was measured through a step similar to that in Example 1. In addition, the maximum thickness of a resin layer formed in a region where the vibration plate and the piezoelectric element face each other, and the thickness of the piezoelectric ceramic in a direction extending along the side surfaces of the piezoelectric element were measured. As a result, the ratio of the maximum height of a resin layer formed in a portion of a side surface of the piezoelectric element to the height of the side surface of the piezoelectric element was 35%. Further, the maximum thickness of a resin layer formed in a region where the vibration plate and the piezoelectric element face each other was 0.4 μm, and the thickness of the piezoelectric ceramic in a direction extending along the side surfaces of the piezoelectric element was 0.35 mm.

[0108] Subsequently, a vibration wave driving device G as illustrated in Fig. 8 was produced through a step similar to that in Example 1.

[0109] The alternating voltages V1 and V2 (each having an amplitude of 10 Vpp) were applied to the vibration wave driving device G via the drive phase electrodes, and the displacement of the vibrator G was measured with a laser-Doppler vibrometer. As a

result, the resin layer of the vibrator G was found to cover the antinodal lines of the vibration mode A and the antinodal lines of the vibration mode B.

Example 8

[0110] A vibrator H was produced through steps similar to those in Example 1, except for the composition of the piezoelectric ceramic in which the Mn content was 0.16 parts by weight in terms of metal and, in addition, the Bi content was 0.03 parts by weight in terms of metal with respect to 100 parts by weight of $(Ba_{0.85}Ca_{0.15})(Ti_{0.93}Zr_{0.07})O_3$.

[0111] Then, the shape of the resin layer of the vibrator H was measured through a step similar to that in Example 1. As a result, as illustrated in Fig. 3D, the resin layer covered all the side surfaces.

[0112] Subsequently, the area coverage ratio of the resin layer within the bonding region of the vibrator H was measured through a step similar to that in Example 1. As a result of image analysis, the area coverage ratio was 91%.

[0113] Further, the ratio of the maximum height of a resin layer formed in a portion of a side surface of the piezoelectric element of the vibrator B to the height of the side surface of the piezoelectric element was measured through a step similar to that in Example 1. In addition, the maximum thickness of a resin layer formed in a region where the vibration plate and the piezoelectric element face each other, and the thickness of the piezoelectric ceramic in a direction extending along the side surfaces of the piezoelectric element were measured. As a result, the ratio of the maximum height of a resin layer formed in a portion of a side surface of the piezoelectric element to the height of the side surface of the piezoelectric element was 40%. Further, the maximum thickness of a resin layer formed in a region where the vibration plate and the piezoelectric element face each other was 3.0 μm, and the thickness of the piezoelectric ceramic in a direction extending along the side surfaces of the piezoelectric element was 0.35 mm.

[0114] Subsequently, a vibration wave driving device H as illustrated in Fig. 8 was produced through a step similar to that in Example 1.

[0115] The alternating voltages V1 and V2 (each having an amplitude of 10 Vpp) were applied to the vibration wave driving device H via the drive phase electrodes, and the displacement of the vibrator H was measured with a laser-Doppler vibrometer. As a result, the resin layer of the vibrator H was found to cover the antinodal lines of the vibration mode A and the antinodal lines of the vibration mode B.

Example 9

[0116] A vibrator I was produced through steps similar to those in Example 1, except for the composition of the piezoelectric ceramic in which the Bi content was 0.03 parts by weight in terms of metal with respective to 100 parts by weight of $(Ba_{0.85}Ca_{0.15})TiO_3$.

[0117] Then, the shape of the resin layer of the vibrator I was measured through a step

similar to that in Example 1. As a result, as illustrated in Fig. 3D, the resin layer covered all the side surfaces.

[0118] Subsequently, the area coverage ratio of the resin layer within the bonding region of the vibrator I was measured through a step similar to that in Example 1. As a result of image analysis, the area coverage ratio was 90%.

[0119] Further, the ratio of the maximum height of a resin layer formed in a portion of a side surface of the piezoelectric element of the vibrator I to the height of the side surface of the piezoelectric element was measured through a step similar to that in Example 1. In addition, the maximum thickness of a resin layer formed in a region where the vibration plate and the piezoelectric element face each other, and the thickness of the piezoelectric ceramic in a direction extending along the side surfaces of the piezoelectric element were measured. As a result, the ratio of the maximum height of a resin layer formed in a portion of a side surface of the piezoelectric element to the height of the side surface of the piezoelectric element was 60%. Further, the maximum thickness of a resin layer formed in a region where the vibration plate and the piezoelectric element face each other was 7.1 μm, and the thickness of the piezoelectric ceramic in a direction extending along the side surfaces of the piezoelectric element was 0.35 mm.

[0120] Subsequently, a vibration wave driving device I as illustrated in Fig. 8 was produced through a step similar to that in Example 1.

[0121] The alternating voltages V1 and V2 (each having an amplitude of 10 Vpp) were applied to the vibration wave driving device I via the drive phase electrodes, and the displacement of the vibrator I was measured with a laser-Doppler vibrometer. As a result, the resin layer of the vibrator I was found to cover the antinodal lines of the vibration mode A and the antinodal lines of the vibration mode B.

Example 10

[0122] A vibrator J was produced through steps similar to those in Example 1, except that the composition of the piezoelectric ceramic was $Pb(Zr_{0.52}Ti_{0.48})O_3$, the piezoelectric ceramic was ground and polished to a thickness of 0.42 mm, and the piezoelectric ceramic was subjected to polarization processing at a temperature of 150°C with a field strength of 2.0 kV/ mm.

[0123] Then, the shape of the resin layer of the vibrator J was measured through a step similar to that in Example 1. As a result, as illustrated in Fig. 3D, the resin layer covered all the side surfaces.

[0124] Subsequently, the area coverage ratio of the resin layer within the bonding region of the vibrator J was measured through a step similar to that in Example 1. As a result of image analysis, the area coverage ratio was 96%.

[0125] Further, the ratio of the maximum height of a resin layer formed in a portion of a side

surface of the piezoelectric element of the vibrator J to the height of the side surface of the piezoelectric element was measured through a step similar to that in Example 1. In addition, the maximum thickness of a resin layer formed in a region where the vibration plate and the piezoelectric element face each other, and the thickness of the piezoelectric ceramic in a direction extending along the side surfaces of the piezoelectric element were measured. As a result, the ratio of the maximum height of a resin layer formed in a portion of a side surface of the piezoelectric element to the height of the side surface of the piezoelectric element was 60%. Further, the maximum thickness of a resin layer formed in a region where the vibration plate and the piezoelectric element face each other was 6.8 μm, and the thickness of the piezoelectric ceramic in a direction extending along the side surfaces of the piezoelectric element was 0.41 mm.

[0126] Subsequently, a vibration wave driving device J as illustrated in Fig. 8 was produced through a step similar to that in Example 1.

[0127] The alternating voltages V1 and V2 (each having an amplitude of 10 Vpp) were applied to the vibration wave driving device J via the drive phase electrodes, and the displacement of the vibrator J was measured with a laser-Doppler vibrometer. As a result, the resin layer of the vibrator J was found to cover the antinodal lines of the vibration mode A and the antinodal lines of the vibration mode B.

COMPARATIVE EXAMPLE 1

[0128] First, a piezoelectric ceramic was produced by firing a metal oxide powder. As a result of measuring the composition of the piezoelectric ceramic by using X-ray fluorescence (XRF) analysis, 0.16 parts by weight of Mn in terms of metal relative to 100 parts by weight of $(Ba_{0.85}Ca_{0.15})(Ti_{0.93}Zr_{0.07})O_3$ were contained, and a lead content was less than 1000 ppm. Subsequently, analysis of the crystal structure of the piezoelectric ceramic by using X-ray diffraction (XRD) measurement indicated a perovskite structure. That is, the piezoelectric ceramic contained a perovskite metal oxide composed of a substitute for barium titanate.

[0129] Then, after the piezoelectric ceramic was ground and polished to a thickness of 0.36 mm, the piezoelectric ceramic was cut into pieces of 8.7×5.7 mm^2 in size to obtain a single-piece piezoelectric ceramic formed into a substantially rectangular parallelepiped shape. A silver paste was applied to both surfaces of the piezoelectric ceramic to form drive phase electrodes and a ground electrode, as illustrated in Fig. 8, by using screen printing to produce a piezoelectric element.

[0130] Then, a vibration plate was caused to adhere to the piezoelectric element with a resin layer interposed therebetween.

[0131] The vibration plate, which was made of magnetic stainless steel JIS SUS420J2 and had dimensions of $9.0 \times 5.8 \times 0.3$ mm^3, was used. Further, the vibration plate was provided with support portions out of a plane thereof and projection portions in the

plane thereof, as illustrated in Fig. 7. An epoxy-based liquid adhesive (with a glass transition temperature of 120°C) was used as a resin precursor, and the resin precursor was applied to a bonding surface of the vibration plate by using a dispenser. Then, a ground electrode surface of the piezoelectric element and the vibration plate were brought into pressure contact with each other for 3 minutes, and a rubber was placed around the piezoelectric element to prevent the resin precursor from extending from a bonding region. Thereafter, the rubber was removed and the piezoelectric element, and the vibration plate were placed into a drying oven and were held at 130°C for 60 minutes to cure the resin precursor, thereby forming a resin layer.

[0132] Subsequently, as illustrated in Fig. 8, a power feeding member for the drive phase electrodes and the ground electrode was formed, by thermocompression bonding, on the surface of the piezoelectric element having the second electrodes to which the vibration plate did not adhere. Specifically, the power feeding member, which was formed of a flexible cable, was connected to the piezoelectric element by using an anisotropic conductive film (ACF). The conditions for thermocompression bonding were a duration of 10 seconds and a pressure of 2 MPa.

[0133] Then, the piezoelectric ceramic was subjected to polarization processing at 100°C. Specifically, each of the two drive phase electrodes of the piezoelectric element was brought into contact with a contact pin for polarization to apply a voltage by using the vibration plate as ground. At this time, direct-current voltages were applied to the piezoelectric ceramic for 30 minutes to achieve a field strength of 1.0 kV/mm.

[0134] As a result of the steps described above, a vibrator K according to a comparative example was obtained.

[0135] Then, to measure the shape of the resin layer of the vibrator K, the resin layer was observed with an optical microscope from the surface having the drive phase electrodes. As a result, the resin layer covered none of the side surface portions.

[0136] Subsequently, a photographic image was obtained with an ultrasonic imaging device (manufactured by Hitachi Construction Machinery Co., Ltd. and commercially available under the name FS300) to measure the area coverage ratio of the resin layer within the bonding region of the vibrator K. As a result of image analysis, the area coverage ratio was 95%.

[0137] Further, the ratio of the maximum height of a resin layer formed in a portion of a side surface of the piezoelectric element of the vibrator K to the height of the side surface of the piezoelectric element was measured. In addition, to measure the maximum thickness of a resin layer formed in a region where the vibration plate and the piezoelectric element face each other, and the thickness of the piezoelectric ceramic in a direction extending along the side surfaces of the piezoelectric element, one of vibrators K was cut along a direction parallel to the long sides of the piezoelectric

ceramic and the cross section of the vibrator K was observed with an SEM. As a result, the ratio of the maximum height of a resin layer formed in a portion of a side surface of the piezoelectric element to the height of the side surface of the piezoelectric element was 0%. Further, the maximum thickness of a resin layer formed in a region where the vibration plate and the piezoelectric element face each other was 4.2 μm, and the thickness of the piezoelectric ceramic in a direction extending along the side surfaces of the piezoelectric element was 0.35 mm.

[0138] Subsequently, voltage input units were connected to the vibrator K via the power feeding member to produce a vibration wave driving device K as illustrated in Fig. 8.

[0139] The alternating voltages V1 and V2 (each having an amplitude of 10 Vpp) were applied to the vibration wave driving device K via the drive phase electrodes, and the displacement of the vibrator K was measured with a laser-Doppler vibrometer. First, when the phase difference between the alternating voltages V1 and V2 was set to 0°, vibration mode A with two nodal lines was generated in the vibrator K. Then, when the phase difference between the alternating voltages V1 and V2 was set to 180°, vibration mode B with three nodal lines, which is substantially perpendicular to the vibration mode A, was generated in the vibrator K. The results described above indicated that the resin layer of the vibrator K did not cover either the antinodal lines of the vibration mode A or the antinodal lines of the vibration mode B.

[0140] The results of Examples 1 to 10 and Comparative Example 1 are summarized in Table 1.

[0141]

[Table 1]

			Coverage shape as viewed from surface having first electrode	Mode of covered antinodal lines
Example 1	Piezoelectric Vibrator A	Vibration wave driving device A	Coverage Pattern 4	Vibration Mode A Vibration Mode B
Example 2	Piezoelectric Vibrator B	Vibration wave driving device B	Coverage Pattern 3	Vibration Mode B
Example 3	Piezoelectric Vibrator C	Vibration wave driving device C	Coverage Pattern 2	Vibration Mode A
Example 4	Piezoelectric Vibrator D	Vibration wave driving device D	Coverage Pattern 1	Vibration Mode A
Example 5	Piezoelectric Vibrator E	Vibration wave driving device E	Coverage Pattern 4	Vibration Mode A Vibration Mode B
Example 6	Piezoelectric Vibrator F	Vibration wave driving device F	Coverage Pattern 4	Vibration Mode A Vibration Mode B
Example 7	Piezoelectric Vibrator G	Vibration wave driving device G	Coverage Pattern 4	Vibration Mode A Vibration Mode B
Example 8	Piezoelectric Vibrator H	Vibration wave driving device H	Coverage Pattern 4	Vibration Mode A Vibration Mode B
Example 9	Piezoelectric Vibrator I	Vibration wave driving device I	Coverage Pattern 4	Vibration Mode A Vibration Mode B
Example 10	Piezoelectric Vibrator J	Vibration wave driving device J	Coverage Pattern 4	Vibration Mode A Vibration Mode B
Comparative Example 1	Piezoelectric Vibrator K	Vibration wave driving device K	No Coverage	No Mode

[0142]

[Table 2]

	Area coverage ratio of resin layer within bonding region (%)	Ratio of maximum height of resin layer formed in portion of side surface of piezoelectric element to height of side surface of piezoelectric element (%)	Maximum thickness of resin layer formed in region where vibration plate and piezoelectric element face each other (μm)	Thickness of piezoelectric ceramic in direction extending along side surfaces of piezoelectric element (mm)
Example 1	98	65	4.2	0.35
Example 2	95	61	4.2	0.35
Example 3	96	61	4.2	0.36
Example 4	97	60	6.1	0.34
Example 5	58	65	5.3	0.35
Example 6	65	4	2.8	0.35
Example 7	92	35	0.4	0.35
Example 8	91	40	3.0	0.35
Example 9	90	60	7.1	0.35
Example 10	96	60	6.8	0.41
Comparative Example 1	95	0	4.2	0.35

[0143]

[Table 3]

	Positional relationship of resin layer relative to vibration plate	Type of resin layer	Lead content of piezoelectric ceramic	Composition of piezoelectric ceramic	Presence/absence of support portions made of same material as that of vibration plate
Example 1	In plane of vibration plate	Epoxy-based resin	Less than 1000 ppm	$(Ba_{0.85}Ca_{0.15})(Ti_{0.93}Zr_{0.07})O_3$ + Mn 0.16 wt%	Present
Example 2	In plane of vibration plate	Epoxy-based resin	Less than 1000 ppm	$(Ba_{0.85}Ca_{0.15})(Ti_{0.93}Zr_{0.07})O_3$ + Mn 0.16 wt%	Present
Example 3	In plane of vibration plate	Epoxy-based resin	Less than 1000 ppm	$(Ba_{0.85}Ca_{0.15})(Ti_{0.93}Zr_{0.07})O_3$ + Mn 0.16 wt%	Present
Example 4	In plane of vibration plate	Epoxy-based resin	Less than 1000 ppm	$(Ba_{0.85}Ca_{0.15})(Ti_{0.93}Zr_{0.07})O_3$ + Mn 0.16 wt%	Present
Example 5	In plane of vibration plate	Epoxy-based resin	Less than 1000 ppm	$(Ba_{0.85}Ca_{0.15})(Ti_{0.93}Zr_{0.07})O_3$ + Mn 0.16 wt%	Present
Example 6	In plane of vibration plate	Epoxy-based resin	Less than 1000 ppm	$(Ba_{0.85}Ca_{0.15})(Ti_{0.93}Zr_{0.07})O_3$ + Mn 0.16 wt%	Present
Example 7	In plane of vibration plate	Epoxy-based resin	Less than 1000 ppm	$(Ba_{0.85}Ca_{0.15})(Ti_{0.93}Zr_{0.07})O_3$ + Mn 0.16 wt%	Present
Example 8	In plane of vibration plate	Epoxy-based resin	Less than 1000 ppm	$(Ba_{0.85}Ca_{0.15})(Ti_{0.93}Zr_{0.07})O_3$ + Mn 0.16 wt% + Bi 0.03 wt%	Present
Example 9	In plane of vibration plate	Epoxy-based resin	Less than 1000 ppm	$(Ba_{0.85}Ca_{0.15})TiO_3$ + Bi 0.03 wt%	Present
Example 10	In plane of vibration plate	Epoxy-based resin	50 mol%	$Pb(Zr_{0.52}Ti_{0.48})O_3$	Present
Comparative Example 1	In plane of vibration plate	Epoxy-based resin	Less than 1000 ppm	$(Ba_{0.85}Ca_{0.15})(Ti_{0.93}Zr_{0.07})O_3$ + Mn 0.16 wt%	Present

(EXAMPLE 11 to EXAMPLE 20)

[0144] Next, the respective vibration plates of the vibrators A to J produced in Examples 1 to 10 were each brought into contact with a driven body (slider) to produce a vibration wave motor as illustrated in Fig. 9 (Examples 11 to 20). The alternating voltages V1 and V2 (each having an amplitude of 100 Vpp) were applied to the each of the produced vibration wave motors via the drive phase electrodes. At this time, the driven body (slider) was driven to reciprocate 100 times in the direction indicated by the arrow in Fig. 9 with the phase difference θ between the alternating voltages V1 and V2 being set to 90° and -90° repeatedly 100 times in such a manner as 90° → -90° → 90° → -90°. Thereafter, a photographic image was obtained with an ultrasonic imaging

device (manufactured by Hitachi Construction Machinery Co., Ltd. and commercially available under the name FS300) to check whether peeling has occurred between the piezoelectric element and the vibration plate. The area coverage ratio of the resin layer within the bonding region after driving was measured by using a technique similar to that for the area coverage ratio of the resin layer within the bonding region before driving. The results are given in Table 4.

COMPARATIVE EXAMPLE 2

[0145] A vibration wave motor as illustrated in Fig. 9 was produced, driven, and evaluated by using the vibrator K produced in Comparative Example 1 through steps similar to those in Examples 11 to 20 (Comparative Example 2).

[0146] [Table 4]

		Area coverage ratio of resin layer within bonding region before consecutive driving (%)	Area coverage ratio of resin layer within bonding region after consecutive driving (%)	Difference between area coverage ratios before and after consecutive driving (%)
Example 11	Vibration Wave Motor A	98	98	0
Example 12	Vibration Wave Motor B	95	94	-1
Example 13	Vibration Wave Motor C	96	95	-1
Example 14	Vibration Wave Motor D	97	92	-5
Example 15	Vibration Wave Motor E	58	55	-3
Example 16	Vibration Wave Motor F	65	62	-3
Example 17	Vibration Wave Motor G	92	89	-3
Example 18	Vibration Wave Motor H	91	90	-1
Example 19	Vibration Wave Motor I	90	88	-2
Example 20	Vibration Wave Motor J	96	94	-2
Comparative Example 2	Vibration Wave Motor K	95	65	-30

[0147] According to Table 4, in the vibration wave motors A to J in Examples 11 to 20, the changes between the area coverage ratios before and after consecutive driving were less than or equal to -5%, that is, peeling was less likely to occur between the piezo-

electric element and the vibration plate. In the vibration wave motor K in Comparative Example 2, in contrast, the change between the area coverage ratios before and after consecutive driving was -30%, that is, large peeling occurred between the piezoelectric element and the vibration plate.

[0148] In Examples 11 to 20, furthermore, the changes in area coverage ratio for the vibration wave motors including the vibrators with coverage pattern 4 were comparatively small. The reason for this is considered to be that both the antinodal lines of the vibration mode A and the antinodal lines of the vibration mode B were covered.

(EXAMPLE 21 and COMPARATIVE EXAMPLE 3)

[0149] An optical device as illustrated in Fig. 10 was produced by dynamically coupling the vibration wave motor produced in Example 11, a movable body, and an optical member to each other (Example 21). Further, an optical device as illustrated in Fig. 10 was produced by dynamically coupling the vibration wave motor produced in Comparative Example 2, a movable body, and an optical member to each other (Comparative Example 3). It was observed that both optical devices performed an autofocus operation in accordance with the application of alternating voltages. In the optical device according to Comparative Example 3, however, peeling occurred between the piezoelectric element and the vibration plate after the autofocus operation was performed 100 times, and a reduction in area coverage ratio greater than or equal to 30% was observed.

[0150] While the present invention has been described with reference to exemplary embodiments, it is to be understood that the invention is not limited to the disclosed exemplary embodiments. The scope of the following claims is to be accorded the broadest interpretation so as to encompass all such modifications and equivalent structures and functions.

[0151] This application claims the benefit of Japanese Patent Application No. 2017-090411, filed April 28, 2017, which is hereby incorporated by reference herein in its entirety.

Industrial Applicability

[0152] An embodiment of the present invention can provide a vibrator in which peeling is less likely to occur between a piezoelectric element and a vibration plate. A method for manufacturing a vibrator according to another embodiment of the present invention can produce a vibrator with high yield in which peeling is less likely to occur between a piezoelectric element and a vibration plate. Further, embodiments of the present invention can provide a vibration wave driving device, a vibration wave motor, and an optical device in which peeling is less likely to occur between a piezoelectric element and a vibration plate. In addition, the vibrator according to the embodiment of the present invention is applicable to an electronic device including an electronic

component and a vibrator.

Reference Signs List

[0153] 1 piezoelectric ceramic
101 piezoelectric element
1011 vibrator
2 first electrode
21 ground electrode
3 second electrode
31 drive phase electrode
4 resin layer
41 bonding region
5 vibration plate
51 projection portion
6 support portion
7 power feeding member
71 electrical wiring
8 driven body (slider)
9 voltage input unit
11 holding member
12 movable housing
13 screw
14 guide member
15 lens holding member
16 lens
17 coupling member
18 sensor
19 scale

Claims

[Claim 1] A vibrator comprising:
a piezoelectric element; and
a vibration plate,
the piezoelectric element including
a piezoelectric ceramic formed into a substantially rectangular parallelepiped shape, and
electrodes,
wherein a portion of one or more side surfaces of the piezoelectric element and a portion of the vibration plate are covered by resin.

[Claim 2] The vibrator according to Claim 1, wherein the resin covers a pair of opposing side surfaces of the piezoelectric element.

[Claim 3] The vibrator according to Claim 1 or 2, wherein the resin is disposed in a region where the vibration plate and the piezoelectric element face each other, and
wherein an area coverage ratio is greater than or equal to 60%, the area coverage ratio being a ratio of an area of the resin disposed in the region to an area of the region.

[Claim 4] The vibrator according to any one of Claims 1 to 3, wherein a ratio of a maximum height of resin disposed in a portion of each of the one or more side surfaces of the piezoelectric element to a height of the side surface of the piezoelectric element is greater than or equal to 5% and less than or equal to 70%.

[Claim 5] The vibrator according to any one of Claims 1 to 4, wherein the resin is disposed in a region where the vibration plate and the piezoelectric element face each other, and
wherein the resin disposed in the region has a maximum thickness of greater than or equal to 0.5 μm and less than or equal to 10 μm.

[Claim 6] The vibrator according to any one of Claims 1 to 5, wherein the resin is disposed only on a flat surface of the vibration plate that faces the piezoelectric element.

[Claim 7] The vibrator according to any one of Claims 1 to 6, wherein the resin includes epoxy-based resin.

[Claim 8] The vibrator according to any one of Claims 1 to 7, wherein a thickness of the piezoelectric ceramic in a height direction extending along the one or more side surfaces of the piezoelectric element is greater than or equal to 0.28 mm and less than or equal to 2.0 mm.

[Claim 9] The vibrator according to any one of Claims 1 to 8, wherein the vibration plate generates two nodal lines of a first vibration mode such that the two nodal lines do not intersect each other and three nodal lines of a second vibration mode such that the three nodal lines do not intersect each other, the two nodal lines of the first vibration mode intersecting the three nodal lines of the second vibration mode, and wherein the resin covers a portion where at least either antinodal lines of the first vibration mode or antinodal lines of the second vibration mode are generated.

[Claim 10] The vibrator according to any one of Claims 1 to 9, wherein the vibration plate includes a plate portion and a support portion, and wherein the plate portion and the support portion are integrated into a single unit.

[Claim 11] The vibrator according to any one of Claims 1 to 10, wherein the piezoelectric ceramic has a lead content less than 1000 ppm.

[Claim 12] The vibrator according to any one of Claims 1 to 11, wherein the piezoelectric ceramic is a perovskite metal oxide including barium titanate or a substitute therefor.

[Claim 13] A method for manufacturing the vibrator according to any one of Claims 1 to 12, comprising:
bonding the piezoelectric element and the vibration plate together with a resin precursor in such a manner that a portion of the one or more side surfaces of the piezoelectric element and a portion of the vibration plate are covered by the resin precursor; and
curing the resin precursor with the piezoelectric element and the vibration plate being brought into pressure contact with each other.

[Claim 14] A vibration wave driving device comprising:
the vibrator according to any one of Claims 1 to 12; and
a power feeding member.

[Claim 15] A vibration wave motor comprising:
the vibration wave driving device according to Claim 14; and
a movable body that is in contact with the vibration plate.

[Claim 16] An optical device comprising:
the vibration wave motor according to Claim 15; and
an optical member movable by the vibration wave motor.

[Claim 17] An electronic device comprising:
an electronic component; and
the vibrator according to any one of Claims 1 to 12.

AMENDED CLAIMS
received by the International Bureau on 03 September 2018 (03.09.2018)

[Claim 1] (Amended) A vibrator comprising:
a piezoelectric element; and
a vibration plate,
the piezoelectric element including
a piezoelectric ceramic formed in a substantially rectangular parallelepiped shape, and
electrodes,
wherein a side surface of one or more side surfaces of the piezoelectric element and a portion of the vibration plate are covered by a resin, and
wherein a ratio of a maximum height of the resin disposed on the side surface to a height of the side surface is greater than or equal to 5% and less than or equal to 70%.

[Claim 2] (Amended) The vibrator according to Claim 1, wherein the resin covers a pair of the side surfaces opposing each other.

[Claim 3] (Amended) The vibrator according to Claim 1 or 2, wherein the resin is disposed on a region where the vibration plate and the piezoelectric element face each other, and
wherein an area coverage ratio is greater than or equal to 60%, the area coverage ratio being a ratio of an area of the resin disposed on the region to an area of the region.

[Claim 4] (Deleted)

[Claim 5] (Amended) The vibrator according to any one of Claims 1 to 3, wherein the resin is disposed on a region where the vibration plate and the piezoelectric element face each other, and
wherein the resin disposed on the region has a maximum thickness of greater than or equal to 0.5 μm and less than or equal to 10 μm.

[Claim 6] (Amended) The vibrator according to any one of Claims 1 to 3 and 5, wherein the resin is disposed only on a flat surface of the vibration plate that faces the piezoelectric element.

[Claim 7] (Amended) The vibrator according to any one of Claims 1 to 3, 5 and 6, wherein the resin includes an epoxy-based resin.

[Claim 8] (Amended) The vibrator according to any one of Claims 1 to 3 and 5 to 7, wherein a thickness of the piezoelectric ceramic in a height direction extending along the one or more side surfaces of the piezoelectric element is greater than or equal to 0.28 mm and less than or equal to 2.0 mm.

[Claim 9] (Amended) The vibrator according to any one of Claims 1 to 3 and 5 to 8, wherein the vibration plate generates two nodal lines of a first

vibration mode such that the two nodal lines do not intersect each other and three nodal lines of a second vibration mode such that the three nodal lines do not intersect each other, the two nodal lines of the first vibration mode intersecting the three nodal lines of the second vibration mode, and

wherein the resin covers a portion where at least either antinodal lines of the first vibration mode or antinodal lines of the second vibration mode are generated.

[Claim 10] (Amended) The vibrator according to any one of Claims 1 to 3 and 5 to 9, wherein the vibration plate includes a plate portion and a support portion, and

wherein the plate portion and the support portion are integrated into a single unit.

[Claim 11] (Amended) The vibrator according to any one of Claims 1 to 3 and 5 to 10, wherein the piezoelectric ceramic has a lead content of less than 1000 ppm.

[Claim 12] (Amended) The vibrator according to any one of Claims 1 to 3 and 5 to 11, wherein the piezoelectric ceramic is a perovskite metal oxide including barium titanate or a substitute therefor.

[Claim 13] (Amended) A method for manufacturing the vibrator according to any one of Claims 1 to 3 and 5 to 12, comprising:

bonding the piezoelectric element and the vibration plate together with a resin precursor in such a manner that the side surface of the one or more side surfaces of the piezoelectric element and the portion of the vibration plate are covered by the resin precursor; and

curing the resin precursor with the piezoelectric element and the vibration plate being brought into pressure contact with each other.

[Claim 14] (Amended) A vibration wave driving device comprising:

the vibrator according to any one of Claims 1 to 3 and 5 to 12; and

a power feeding member.

[Claim 15] A vibration wave motor comprising:

the vibration wave driving device according to Claim 14; and

a movable body that is in contact with the vibration plate.

[Claim 16] An optical device comprising:

the vibration wave motor according to Claim 15; and

an optical member movable by the vibration wave motor.

[Claim 17] (Amended) An electronic device comprising:

an electronic component; and

the vibrator according to any one of Claims 1 to 3 and 5 to 12.

[Fig. 1]

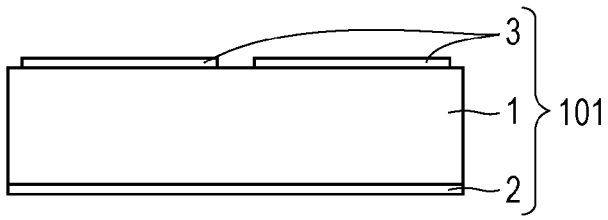

[Fig. 2A]

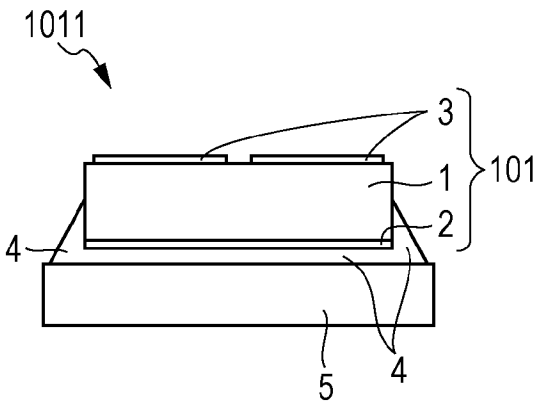

[Fig. 2B]

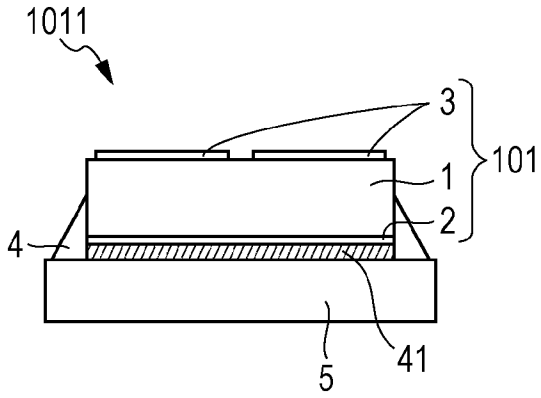

[Fig. 3A]

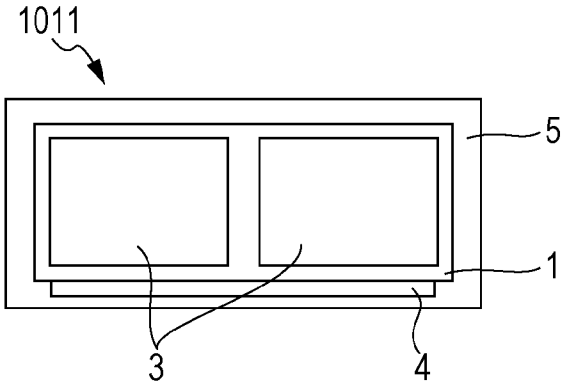

[Fig. 3B]

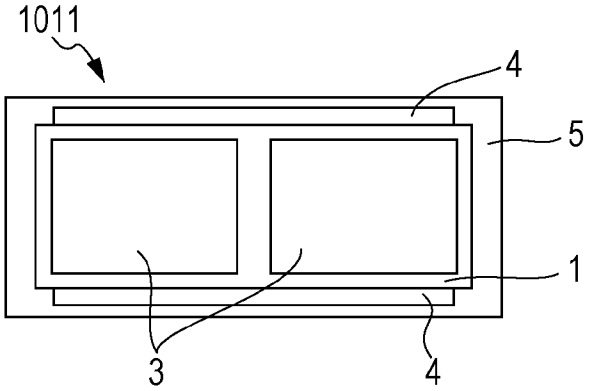

[Fig. 3C]

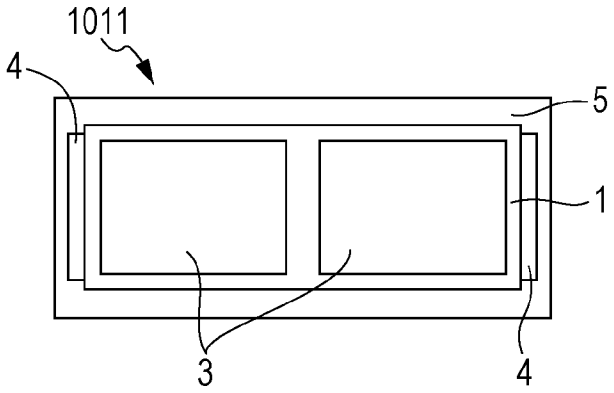

[Fig. 3D]

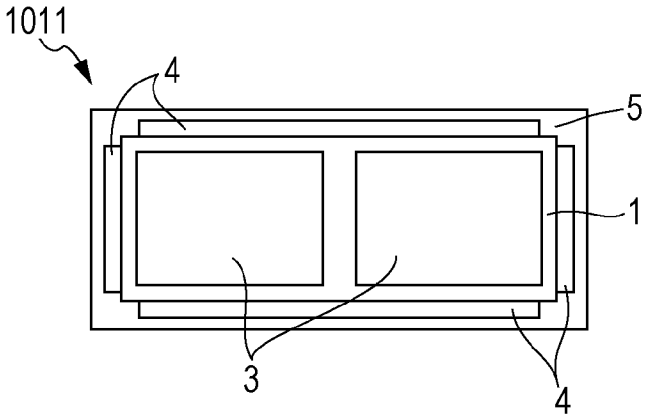

[Fig. 3E]

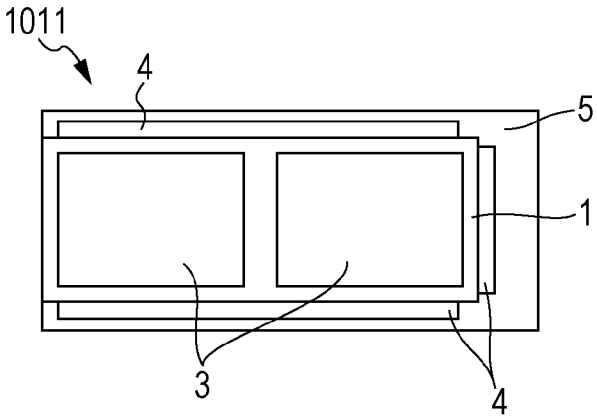

[Fig. 3F]

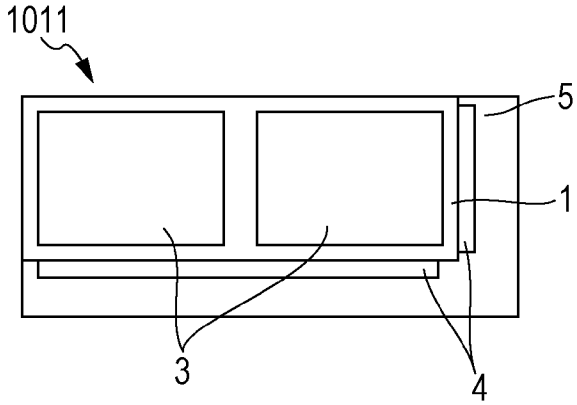

[Fig. 4A]

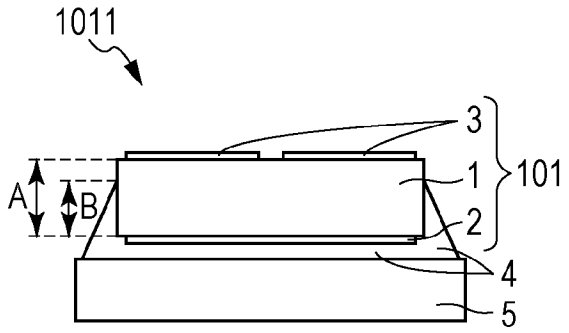

[Fig. 4B]

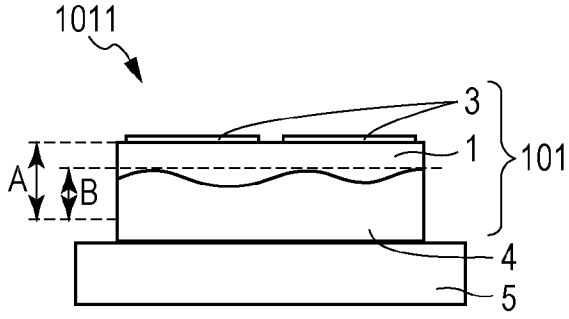

[Fig. 5A]

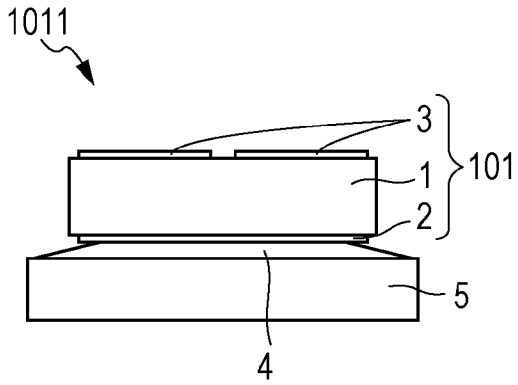

[Fig. 5B]

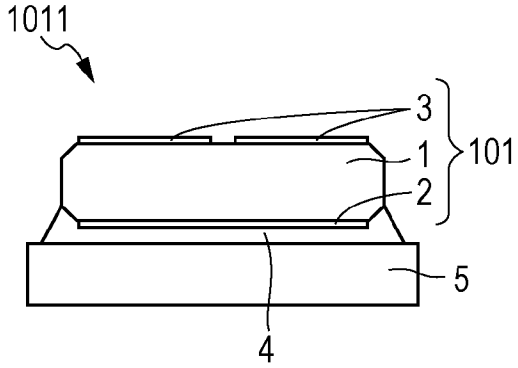

[Fig. 6A]

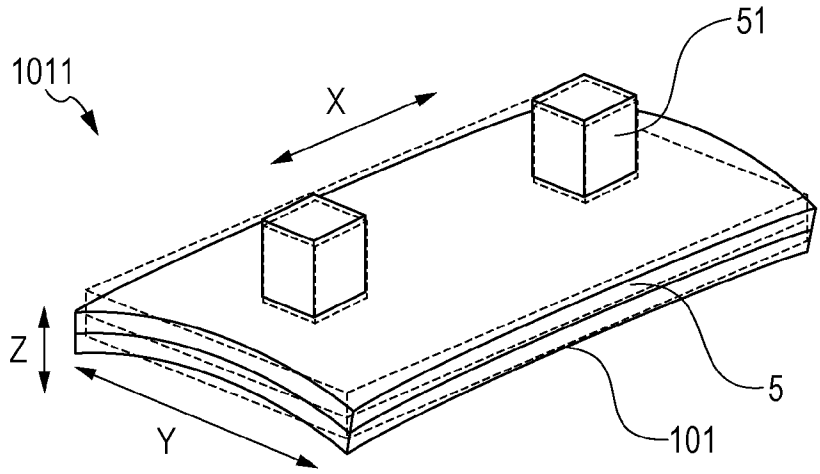

[Fig. 6B]

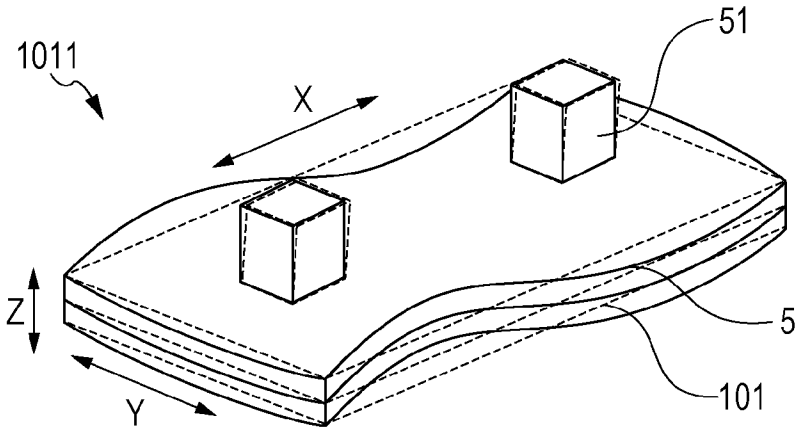

[Fig. 7]

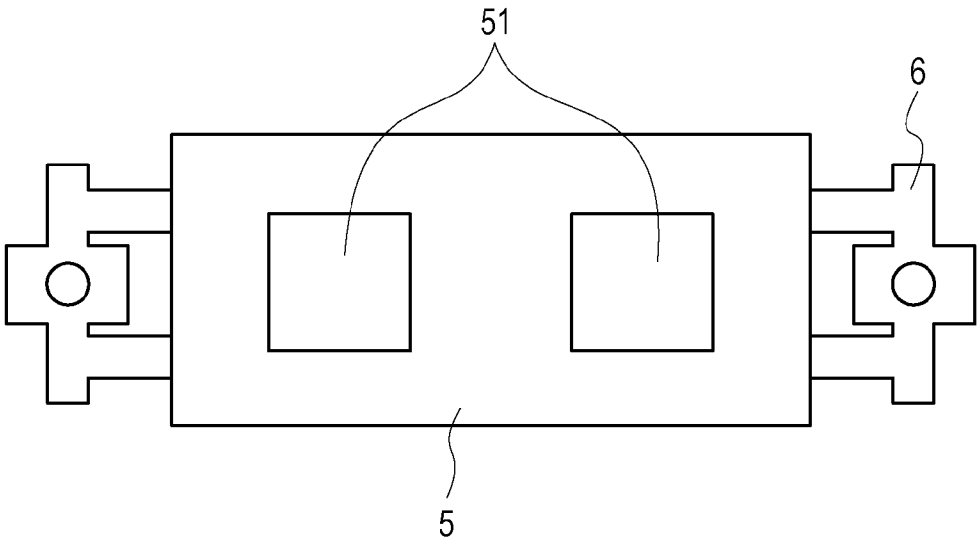

[Fig. 8]

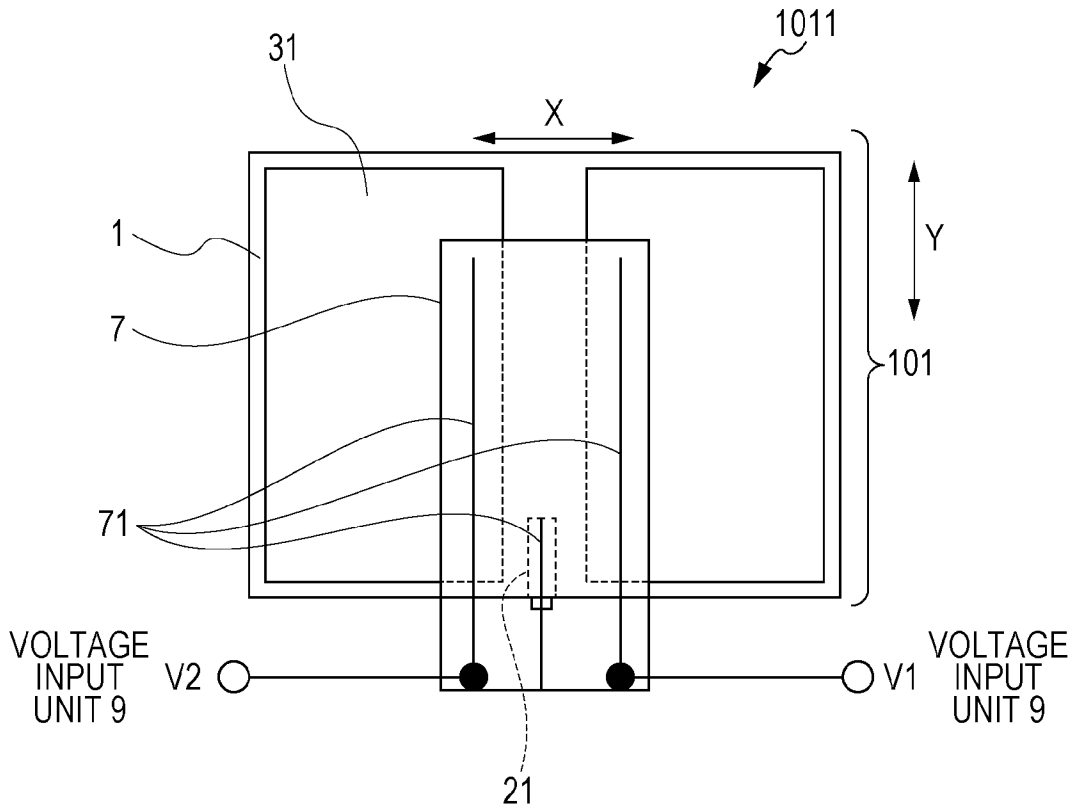
1011
31
X
Y
1
7
101
71
VOLTAGE INPUT UNIT 9
V2
V1
VOLTAGE INPUT UNIT 9
21

[Fig. 9]

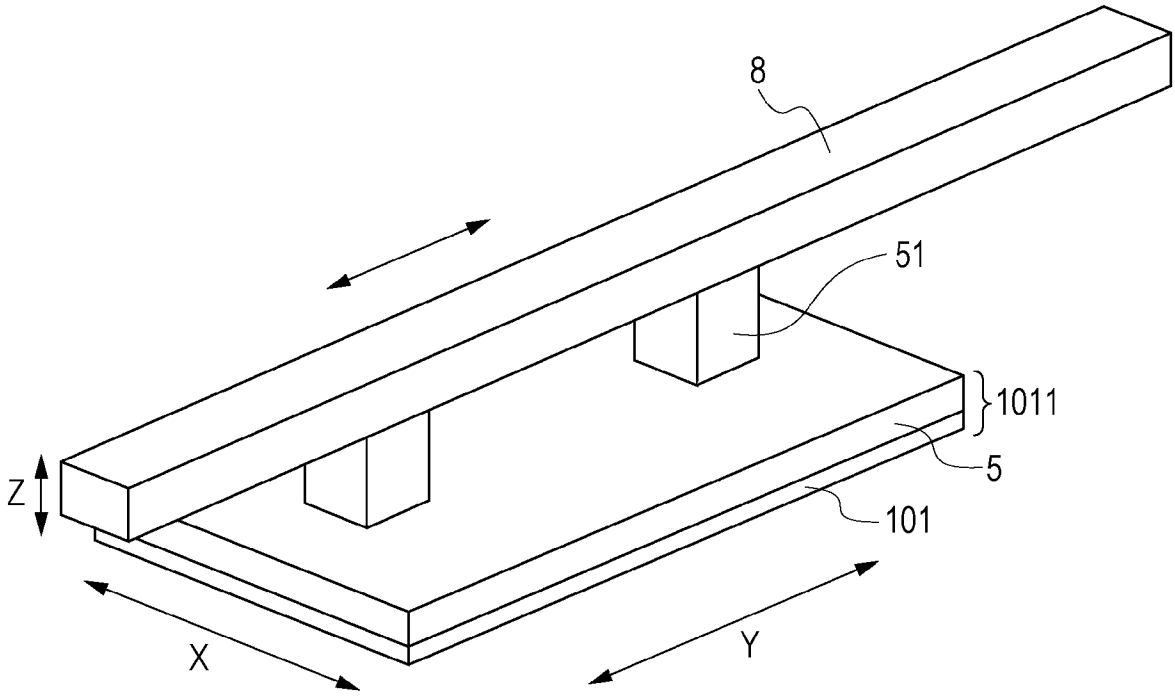

[Fig. 10]

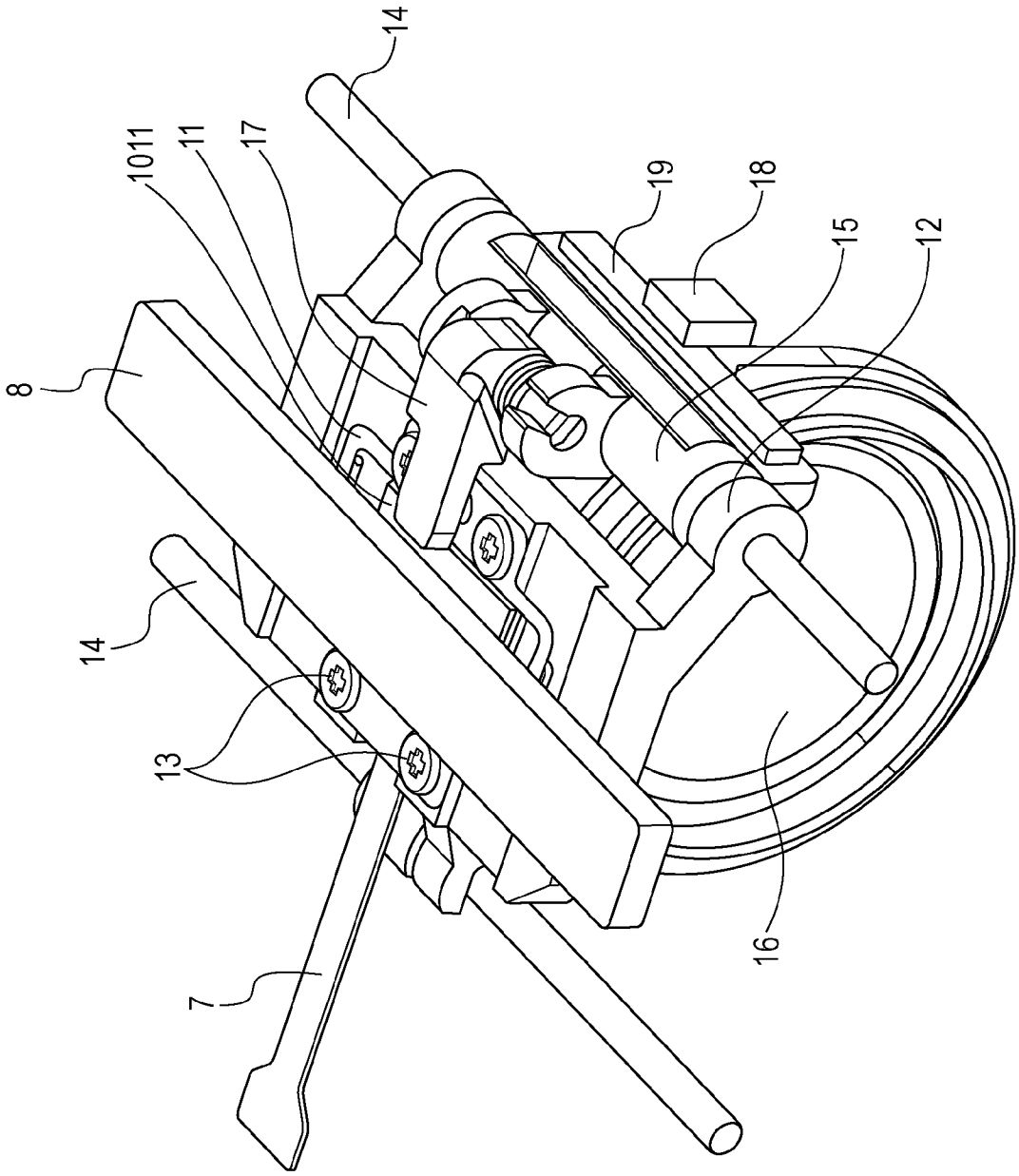

INTERNATIONAL SEARCH REPORT

International application No
PCT/JP2018/016825

A. CLASSIFICATION OF SUBJECT MATTER
INV. G02B7/08 H02N2/02 H01L41/08
ADD.

According to International Patent Classification (IPC) or to both national classification and IPC

B. FIELDS SEARCHED

Minimum documentation searched (classification system followed by classification symbols)
G02B H02N H01L

Documentation searched other than minimum documentation to the extent that such documents are included in the fields searched

Electronic data base consulted during the international search (name of data base and, where practicable, search terms used)
EPO-Internal, WPI Data

C. DOCUMENTS CONSIDERED TO BE RELEVANT

Category*	Citation of document, with indication, where appropriate, of the relevant passages	Relevant to claim No.
X	US 2014/369013 A1 (OIKAWA AKIRA [JP]) 18 December 2014 (2014-12-18) paragraph [0017] - paragraph [0028] paragraph [0036] paragraph [0043] - paragraph [0046] figures 2, 3a, 4b, 4c	1,2,5,7, 11-14
X	US 2014/042870 A1 (OHASHI YASUTAKA [JP] ET AL) 13 February 2014 (2014-02-13) paragraph [0033] - paragraph [0045] figures 3,4	1-3,5-8, 10-13
X Y	EP 1 361 657 A1 (MATSUSHITA ELECTRIC IND CO LTD [JP]) 12 November 2003 (2003-11-12) paragraph [0029] - paragraph [0043] figures 1a,2a,6b,16b	1-6,10, 14 9,15-17

-/--

[X] Further documents are listed in the continuation of Box C.

[X] See patent family annex.

* Special categories of cited documents :

"A" document defining the general state of the art which is not considered to be of particular relevance

"E" earlier application or patent but published on or after the international filing date

"L" document which may throw doubts on priority claim(s) or which is cited to establish the publication date of another citation or other special reason (as specified)

"O" document referring to an oral disclosure, use, exhibition or other means

"P" document published prior to the international filing date but later than the priority date claimed

"T" later document published after the international filing date or priority date and not in conflict with the application but cited to understand the principle or theory underlying the invention

"X" document of particular relevance; the claimed invention cannot be considered novel or cannot be considered to involve an inventive step when the document is taken alone

"Y" document of particular relevance; the claimed invention cannot be considered to involve an inventive step when the document is combined with one or more other such documents, such combination being obvious to a person skilled in the art

"&" document member of the same patent family

Date of the actual completion of the international search	Date of mailing of the international search report
26 June 2018	04/07/2018

Name and mailing address of the ISA/	Authorized officer
European Patent Office, P.B. 5818 Patentlaan 2 NL - 2280 HV Rijswijk Tel. (+31-70) 340-2040, Fax: (+31-70) 340-3016	von Hentig, Roger

2

Form PCT/ISA/210 (second sheet) (April 2005)

INTERNATIONAL SEARCH REPORT

International application No
PCT/JP2018/016825

C(Continuation). DOCUMENTS CONSIDERED TO BE RELEVANT

Category*	Citation of document, with indication, where appropriate, of the relevant passages	Relevant to claim No.
Y	US 2013/334932 A1 (MARUYAMA YUTAKA [JP] ET AL) 19 December 2013 (2013-12-19)	9,15-17
A	paragraph [0015] - paragraph [0018] figure 8	1-8, 10-14

2

INTERNATIONAL SEARCH REPORT

Information on patent family members

International application No
PCT/JP2018/016825

Patent document cited in search report	Publication date	Patent family member(s)	Publication date
US 2014369013 A1	18-12-2014	CN 103814438 A	21-05-2014
		JP 5782129 B2	24-09-2015
		JP WO2013039149 A1	26-03-2015
		US 2014369013 A1	18-12-2014
		WO 2013039149 A1	21-03-2013
US 2014042870 A1	13-02-2014	CN 103460600 A	18-12-2013
		JP 5882306 B2	09-03-2016
		JP WO2012144370 A1	28-07-2014
		US 2014042870 A1	13-02-2014
		WO 2012144370 A1	26-10-2012
EP 1361657 A1	12-11-2003	CN 1476670 A	18-02-2004
		EP 1361657 A1	12-11-2003
		US 2004026361 A1	12-02-2004
		US 2006006760 A1	12-01-2006
		WO 02063763 A1	15-08-2002
US 2013334932 A1	19-12-2013	JP 6184182 B2	23-08-2017
		JP 2014018057 A	30-01-2014
		US 2013334932 A1	19-12-2013