Feb. 2, 1971 A. K. PFAFFENBACH 3,559,286

CUTTING SHEAR

Filed May 8, 1968

FIG. 1

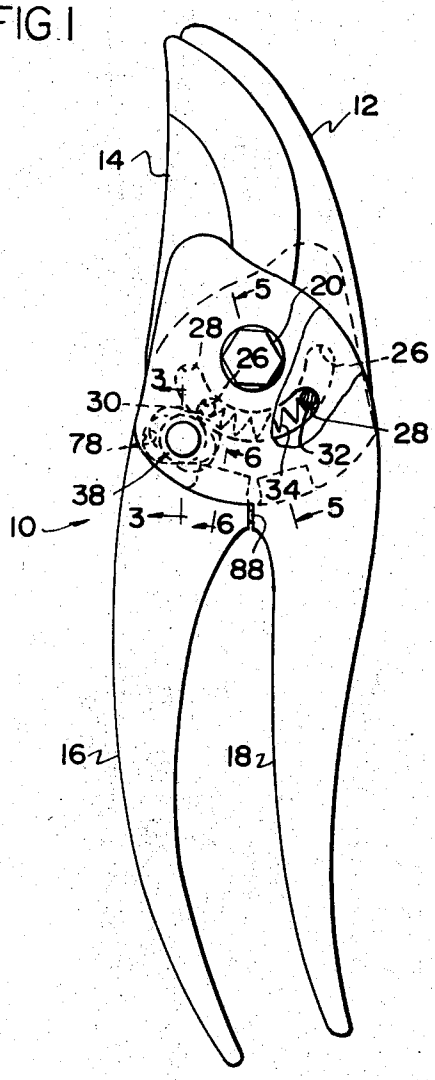

FIG. 5

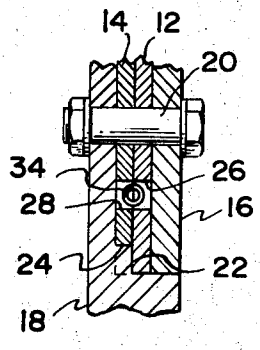

FIG. 6

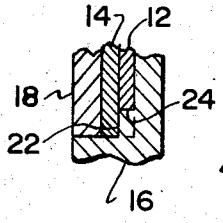

FIG. 3

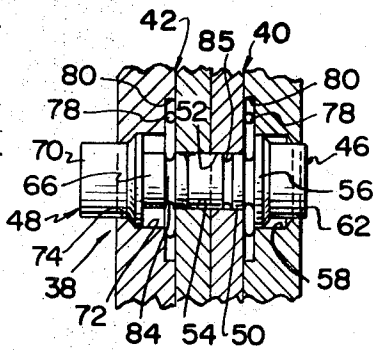

FIG. 4

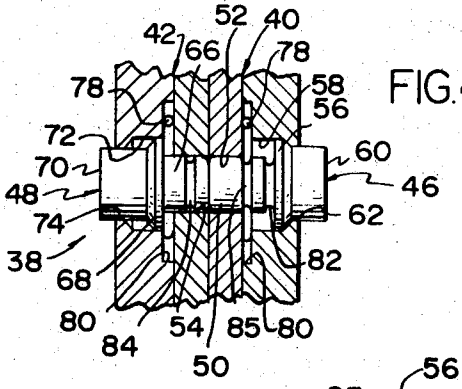

FIG. 2

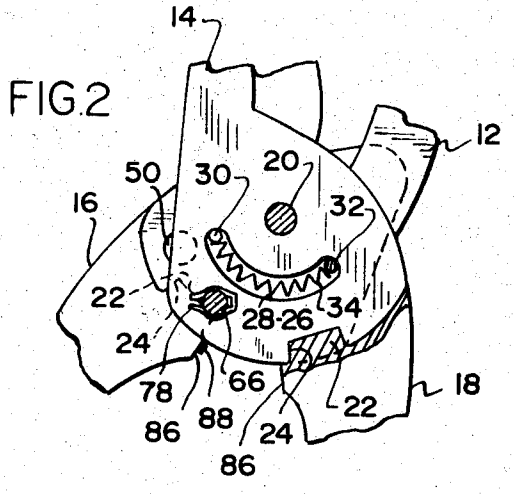

FIG. 7

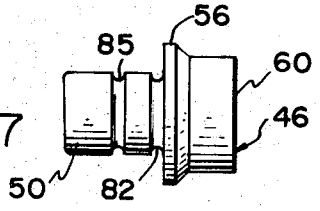

INVENTOR.

ARTHUR K. PFAFFENBACH

BY Charles F. Lind

ATTORNEY

United States Patent Office 3,559,286
Patented Feb. 2, 1971

3,559,286

CUTTING SHEAR

Arthur K. Pfaffenbach, Watertown, Wis., assignor to McGraw-Edison Company, Elgin, Ill.

Filed May 8, 1968, Ser. No. 727,648
Int. Cl. B26b 13/16
U.S. Cl. 30—261 13 Claims

ABSTRACT OF THE DISCLOSURE

In a cutting shear having pairs of blades and handles pivoted to one another across mutually sliding body portions, a lock mechanism including opposed locking and releasing elements mounted reciprocably in respective body portion openings that become aligned with one another when the blades are closed to permit depression of the locking element into interfering engagement within the adjacent body portion opening which simultaneously shifts the releasing element outwardly for its subsequent depression to release the locking element, and detent means for releasably holding the elements as set.

This invention relates to a cutting shear, and more particularly, to an improved lock mechanism for maintaining the blades of the shear closed.

Cutting shears, such as pruners, commonly are provided with locking means for holding the blades closed to permit safe handling or storage. Defects exist in many existing locking means since they can be accidentally disengaged to open the blades. Even so, the cost of some of these locking devices is quite high as compared to the reliability of the device.

The subject invention discloses an improved lock mechanism having opposed depressable elements, each reciprocally mounted in one body portion of the shear and being mutually alignable when the blades are closed, operable to permit depression of the locking element into the opening supporting the releasing element to interlock the adjacent body portions and hold the blades closed and simultaneously to project the releasing element so that it can subsequently be depressed to disengage the locking element for normal use of the shear. Preferably detent means is provided between each element and its supporting body portion to releasably hold the element in the position as set.

A main object of this invention is to provide in a cutting shear a lock mechanism suitable for reliably maintaining the blades closed.

Another object of this invention is to provide an improved lock mechanism including a pair of opposed elements which can be pushed alternately from opposite sides of the shear to lock the blades closed or to release the blades for normal use.

Another object of this invention is to provide an improved lock mechanism according to the previous object wherein detent means are associated with each element to releasably maintain the element in the position to which it is set to prevent accidental release of the lock mechanism.

These and other objects will be more fully appreciated and understood after reviewing the following specification, the accompanying drawing forming a part thereof, wherein:

FIG. 1 is a plan view of a pruning shear showing a preferred embodiment of the subject invention;

FIG. 2 is a view similar to FIG. 1 except showing the shear in its opened position and with part of the shear broken away;

FIG. 3 is a greatly enlarged section view taken generally from line 3—3 in FIG. 1 showing the locking mechanism engaged;

FIG. 4 is a view similar to FIG. 3, except showing the locking mechanism open;

FIGS. 5 and 6 are sectional views taken from lines 5—5 and 6—6, respectively, of FIG. 1; and

FIG. 7 is a side elevational view of the locking element in the locking mechanism.

The pruning shear **10** shown includes a pair of blades **12** and **14** connected respectively to a pair of handles **16** and **18** across pivot pin **20** extended through adjacent body portions of the blades and handles. Each blade is keyed to its handle by means of a tongue **22** received within a groove **24** formed in the blade, and by means of the pivot pin **20**. Identical slots **26** and **28** are respectively formed in the blades **12** and **14**, and posts **30** and **32** on the respective handles **16** and **18** extend through the slot of the blade connected thereto and into the slot of the opposite blade. A spring **34** received within the blade slots acts against the posts **30** and **32** to bias the blades toward the open position (FIG. 2). Upon manual manipulation of the handles toward one another the spring is compressed and the blades traverse one another in shearing relationship.

The four piece construction of the handles and blades is advantageous since the blades can be formed of a durable material, such as steel, machined and heat treated as desired to form durable cutting edges; whereas the handles need only be formed of a material having sufficient strength to withstand the load applied but need not be capable of maintaining any cutting edge.

The locking arrangement **38** in the shear is located in the adjacent body portions **40** and **42** formed by the commonly connected handles and blades. The locking arrangement includes locking element **46** and releasing element **48** each supported within a through opening in its body portion to move between the locking and nonlocking positions. Each opening is concentrically stepped along its length, and the respective locking or releasing element is likewise stepped to fit within its opening.

Specifically, referring to FIGS. 3, 4 and 7, locking element **46** has concentrically disposed sections including a narrow stem **50** adapted to fit within the openings **52** and **54** in the blades, an enlarged shoulder **56** that slides within opening **58** in the handle, and a smaller finger engaging button **60** that fits through opening **52** in the handle to permit manual manipulation thereof by the user of the shear. The opening **58** is longer than shoulder **56** to permit the element **46** to be shifted axially relative to the body portion between the normal operative position of the shear (FIG. 4) and the shear locked position (FIG. 3); whereas the shoulder **56** engages the body portion surrounding the narrowed opening **62** for restraining the element and keeping it within the body portion.

The releasing element **48** is of similar construction generally and includes a stem **66**, shoulder **68** and a finger engaging button **70**; and the shoulder **68** is received in opening **72** and restrained against the body portion surrounding the narrowed opening **74** through which the button **70** projects.

The openings **52** and **54** are at a similar distance from pivot pin **20** and are adapted to be aligned with one another when the blades are closed. To lock the blades closed, the extended finger engaging button **60** of the locking element **46** is depressed to insert the locking stem **50** into interfering engagement within the opening **54** of the adjacent body portion **42**. During this shifting of the locking element **46**, the releasing element **48** is simultaneously shifted to project the finger engaging button **70** from its side of the shear. The locking mechanism can be released merely by depressing the finger engag-

ing button **70** on releasing element **48** which thereby pushes the locking stem **50** from opening **54** and also shifts the locking element **46** to its extended position whereat it projects from its side of the shear. In this position, the adjacent faces of the body portions **40** and **42** can be moved relative to one another to manipulate the shear as required during normal operation.

Detent means are provided to maintain each element in the position where it is set to avoid accidental unlocking of the shear. The stem of each element includes a land area and an adjacent relieved area or groove, and a U-shaped detent spring **78** straddles the stem to exert a drag on the stem and prevent unrestrained axial shifting of the element. The spring **78** is typically received within a recess **80** formed in the face of the adjacent handle. Groove **82** on the locking element stem is adjacent the restraining shoulder while groove **84** on the releasing element stem is in the middle of its stem to provide that each is restrained when the shear is locked closed. Groove **85** on the middle of the locking element stem is engaged by the spring **78** when the lock mechanism is disengaged, to provide normal use of the shear with little chance of accidentally engaging the mechanism.

To eliminate the shock that commonly is transmitted to the handles of a cutting shear when the blades snap close after cutting, a damper is located between adjacent faces or stops **86** of the handles. The damper includes a resilient cushion **88** received in and secured within an opening in one handle that strikes the opposite handle before the handle faces themself strike.

While only a single embodiment of the subject invention has been disclosed, it will be obvious to those skilled in the art that other modifications can be made without departing from the inventive concept of this invention. Accordingly, it is desired that this invention be limited only by the claims thereinafter following.

What is claimed is:

1. In a shear having blades and handles interconnected across adjacent body portions, a lock mechanism, comprising a locking element disposed in an opening in one body portion and a releasing element disposed in an opening in the other body portion; said body portion openings mutually aligning when the blades are closed; said locking element being longer than the thickness of its body portion and being movable between opposite positions whereat in one position its inner end is received within thhe other body portion opening to lock the shear blades closed and whereat in the other position its inner end clears the other body portion and the shear is operative and its outer end projects from its body portion; said releasing element being at least as long as the thickness of its body portion and being movable between opposite positions whereat in one position the shear blades are locked closed and its outer end projects from its body portion and whereat in the other position the shear is operative and its inner end is adjacent but clears the one body portion; and depression of the outer end of the respective element simultaneously shifting both elements between the opposite positions.

2. A shear according to claim **1**, wherein detent means between a first of the body portions and its element received therein releasably maintains the element in the position as set.

3. A shear according to claim **1**, wherein detent means between the one body portion and the locking element releasably maintains the element in position whereat the shear blades are locked closed.

4. A shear according to claim **1**, wherein a C-shaped spring engages and straddles the locking element and is supported by the one body portion, and wherein the spring cooperates with appropriately located high land area and adjacent groove means on the locking element to hold the locking element releasably in the position as set.

5. A shear according to claim **1**, wherein at least one of the elements is stepped and includes opposite narrow

sections and an intermediate enlarged shoulder; and wherein the body portion opening for the one element is stepped having opposite narrow portions for the narrow element sections and an enlarged intermediate portion for the enlarged shoulder, and the shoulder being larger than the narrow portions of the opening.

6. A cutting shear, comprising a pair of handles and a pair of blades; means connecting the handles and blades together so that each blade is keyed to a single handle as a common body portion and the body portions are pivoted relative to one another; each blade having an elongated through opening, and each handle having a post that extends through the elongated opening of its keyed blade and into the elongated opening of the opposite blade; a spring received in the elongated blade openings and engaging at its opposite ends the handle posts for resiliently tending to maintain the blades open; and releasable lock means engageable between the body portions to maintain the blades closed.

7. A shear according to claim **6**, wherein the lock means includes a locking element received in a through opening in one body portion and a releasing element received in a through opening in the other body portion, said elements shifting axially within the respective openings between a locking position whereat the inner end of the locking element enters the releasing element opening and the outer end of the releasing element projects from the handle and an operative position whereat the inner end of each element approaches but clears the opposite body portion and the outer end of the locking element projects from its handle.

8. A shear according to claim **7**, wherein each element shifts the opposite element upon its outer end being depressed.

9. A shear according to claim **7**, wherein an intermediate shoulder is on the locking element and the element receiving opening has an enlarged section at the interface of the respective blade and handle for receiving the shoulder, and wherein the shoulder otherwise engages the blades and handle to limit the allowable element movement within the opening.

10. A shear according to claim **7**, wherein detent means formed by a C-shaped spring straddling and engaging the locking element and confined in a recess at the interfaces of the blade and handle maintains the element releasably in the position as set.

11. A shear according to claim **6**, wherein each blade is formed of a durable material shaped and heat treated to have a shearing edge, and wherein each handle is formed of a less durable material than the blades.

12. A cutting shear, comprising a pair of handles and a pair of blades; means connecting the handles and blades together so that each blade is keyed to a single handle and are pivoted relative to one another; a locking element received in a through opening in one blade and its keyed handle and the other blade having an opening that lines up axially with the through opening when the blades are closed; said locking element being longer than its receiving opening and being movable axially therein between two opposite positions whereat in one position its inner end enters and interfaces within the other blade opening to lock the blades relative to one another and whereat in the other position the locking element clears the other blade and the shear is operative and its outer end projects from the exterior of the shear for subsequent manual depression to lock the blades; an intermediate shoulder formed on the locking element and the through opening having an enlarged section at the interface of the one body portion blade and handle for receiving the shoulder, and the shoulder otherwise engaging the blade and handle to limit allowable movement of the locking element.

13. A cutting shear according to claim **12**, wherein detent means formed by a C-shaped spring straddling and engaging the locking element and confined in a recess

at the interfaces of the one body portion blade and handle maintains the locking element releasably in its position as set.

References Cited

UNITED STATES PATENTS

2,504,766	4/1950	Vosbikian	30—262
2,794,249	6/1957	Mainhardt	30—262X
3,047,949	8/1962	Golightly	30—271
3,357,287	12/1967	Wertepny	30—262X

FOREIGN PATENTS

241,842	8/1946	France	30—262
785,709	11/1957	Great Britain	30—261

ROBERT C. RIORDON, Primary Examiner

J. C. PETERS, Assistant Examiner

U.S. Cl. X.R.

30—262