United States Patent [19]

Southard

[11] E **Re. 28,999**

[45] **Reissued Oct. 12, 1976**

[54] **AUTOMATIC RHYTHM SYSTEM PROVIDING DRUM BREAK**

[75] Inventor: **James S. Southard**, Union, Mich.

[73] Assignee: **C. G. Conn, Ltd.**, Oak Brook, Ill.

[22] Filed: **Oct. 6, 1975**

[21] Appl. No.: **620,127**

Related U.S. Patent Documents

Reissue of:

[64] Patent No.: **3,764,722**
Issued: **Oct. 9, 1973**
Appl. No.: **263,474**
Filed: **June 16, 1972**

[52] **U.S. Cl.** **84/1.03**
[51] **Int. Cl.**[2] **G10H 1/00**
[58] **Field of Search** ..... 84/1.01, 1.03, 1.17, 84/1.24, DIG. 12

[56] **References Cited**

UNITED STATES PATENTS

3,358,068	12/1967	Campbell	84/1.01
3,544,693	12/1970	Tripp	84/1.01
3,585,891	6/1971	Schwartz et al.	84/1.03
3,610,799	10/1971	Watson	84/1.01
3,629,480	12/1971	Harris	84/1.03
3,629,481	12/1971	Bunger	84/1.03
3,646,242	2/1972	Okamoto	84/1.03
3,659,031	4/1972	Adachi	84/1.01
3,696,201	10/1972	Arsem et al.	84/1.01
3,697,661	10/1972	Deutsch	84/1.01
3,711,618	1/1973	Freeman	84/1.03
3,712,950	1/1973	Freeman	84/1.03
3,715,442	2/1973	Freeman	84/1.01

Primary Examiner—Stanley J. Witkowski
Attorney, Agent, or Firm—Drummond, Nelson & Ptak

[57] **ABSTRACT**

A rhythm system includes a memory for storing rhythm patterns, with a plurality of sections for controlling individual rhythm instruments, and instrument generators for producing sounds in accordance with the patterns. The patterns are stored in memory lines, with the number of counts in the patterns differing from one pattern to another. A plurality of short rhythm patterns can be stored on a single memory line. The system includes pushbutton switches for selecting the particular rhythm patterns and automatically selects the proper clock frequency for timing the selected rhythm pattern. The system is automatically reset at the end of the pattern and can selectively reset at the beginning of an intermediate position in the memory line, as required when a plurality of rhythms are stored in sequence on a single line. The system can also provide a special rhythm, such as a drum break, and this can be inserted during the playing of a selected continuous rhythm.

27 Claims, 6 Drawing Figures

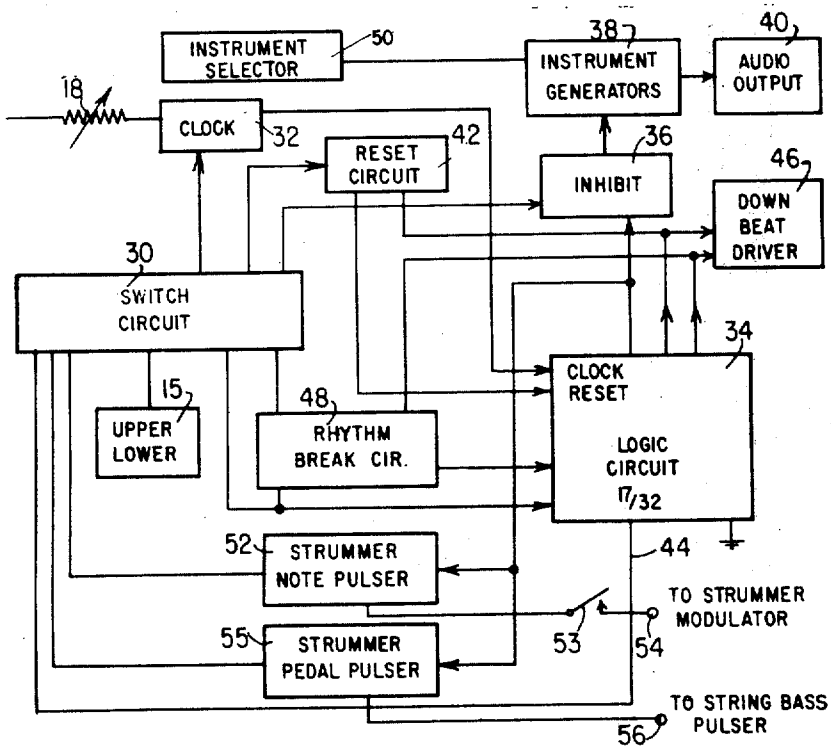

FIG. 1

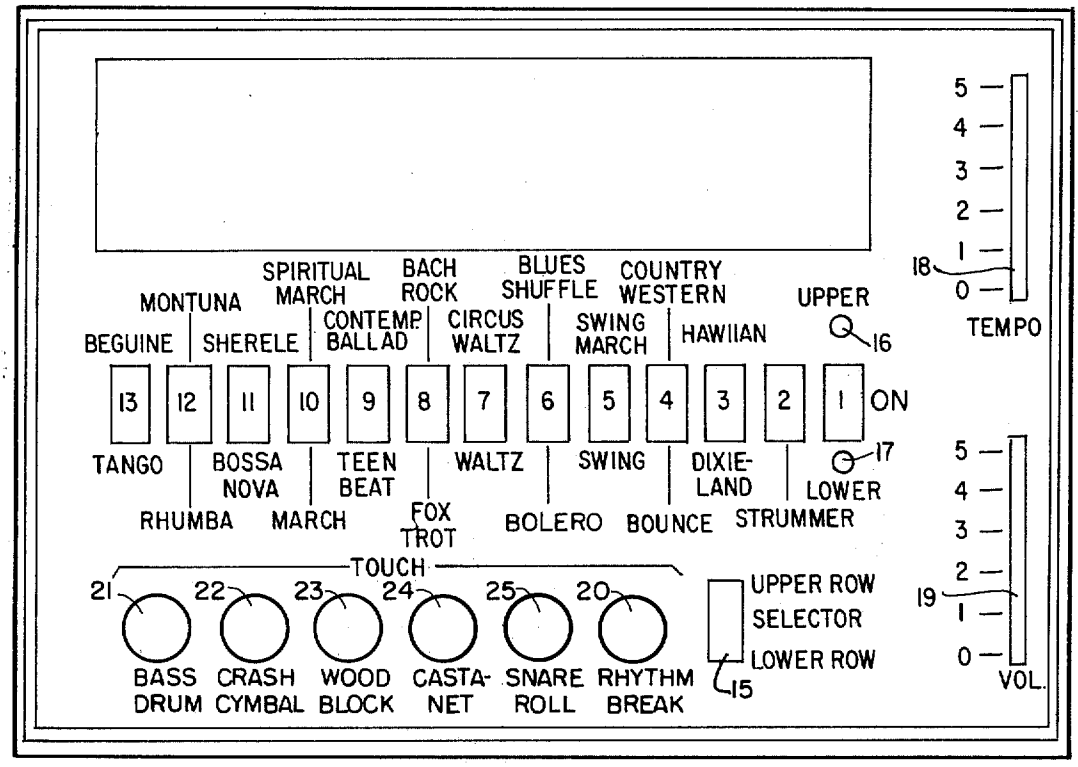
SPIRITUAL MARCH
BACH ROCK
BLUES SHUFFLE
COUNTRY WESTERN
MONTUNA
CONTEMP BALLAD
CIRCUS WALTZ
SWING MARCH
HAWIIAN
UPPER
BEGUINE
SHERELE
16
TEMPO
18
13 12 11 10 9 8 7 6 5 4 3 2 1 ON
TANGO
BOSSA NOVA
TEEN BEAT
WALTZ
SWING
DIXIE-LAND
17
LOWER
RHUMBA
MARCH
FOX TROT
BOLERO
BOUNCE
STRUMMER
TOUCH
21 22 23 24 25 20
UPPER ROW SELECTOR
LOWER ROW
15
19
VOL.
BASS DRUM
CRASH CYMBAL
WOOD BLOCK
CASTA-NET
SNARE ROLL
RHYTHM BREAK

FIG. 2

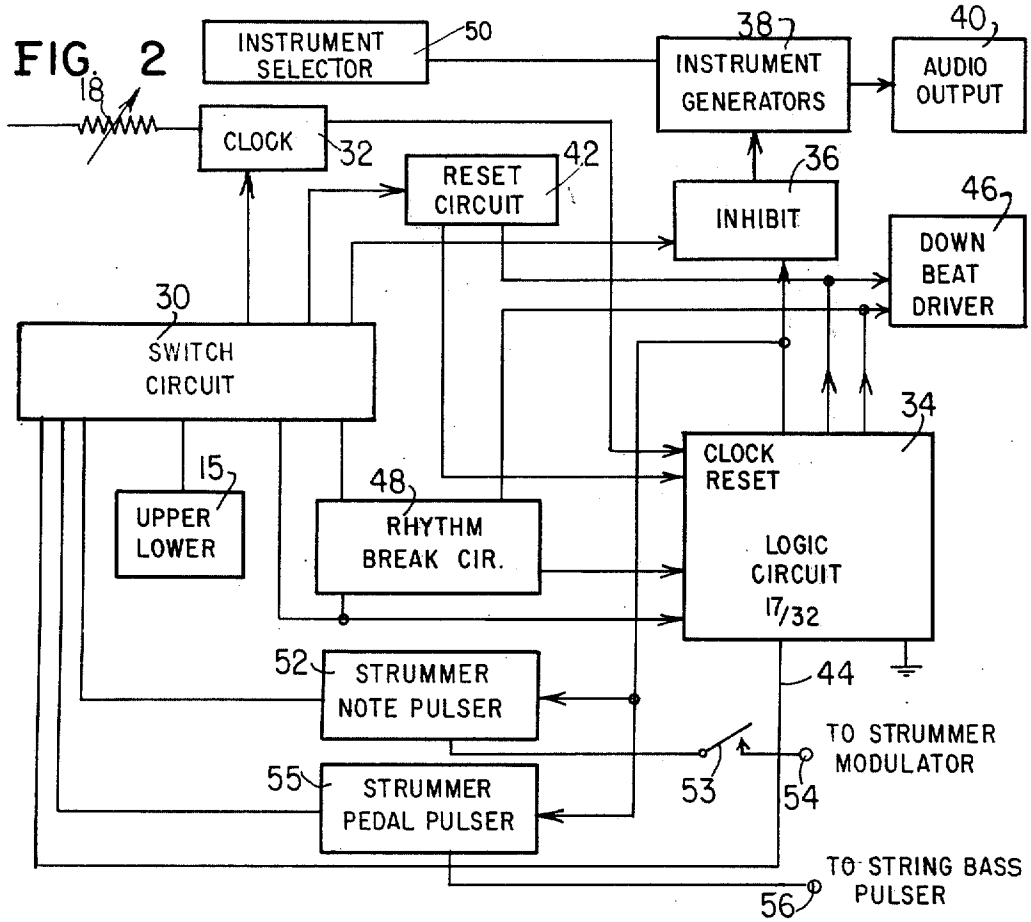
INSTRUMENT SELECTOR
50
INSTRUMENT GENERATORS
38
AUDIO OUTPUT
40
18
CLOCK
32
RESET CIRCUIT
42
INHIBIT
36
DOWN BEAT DRIVER
46
30
SWITCH CIRCUIT
34
15
UPPER LOWER
48
RHYTHM BREAK CIR.
CLOCK RESET
LOGIC CIRCUIT
17/32
52
STRUMMER NOTE PULSER
44
TO STRUMMER MODULATOR
55
STRUMMER PEDAL PULSER
53
54
TO STRING BASS PULSER
56

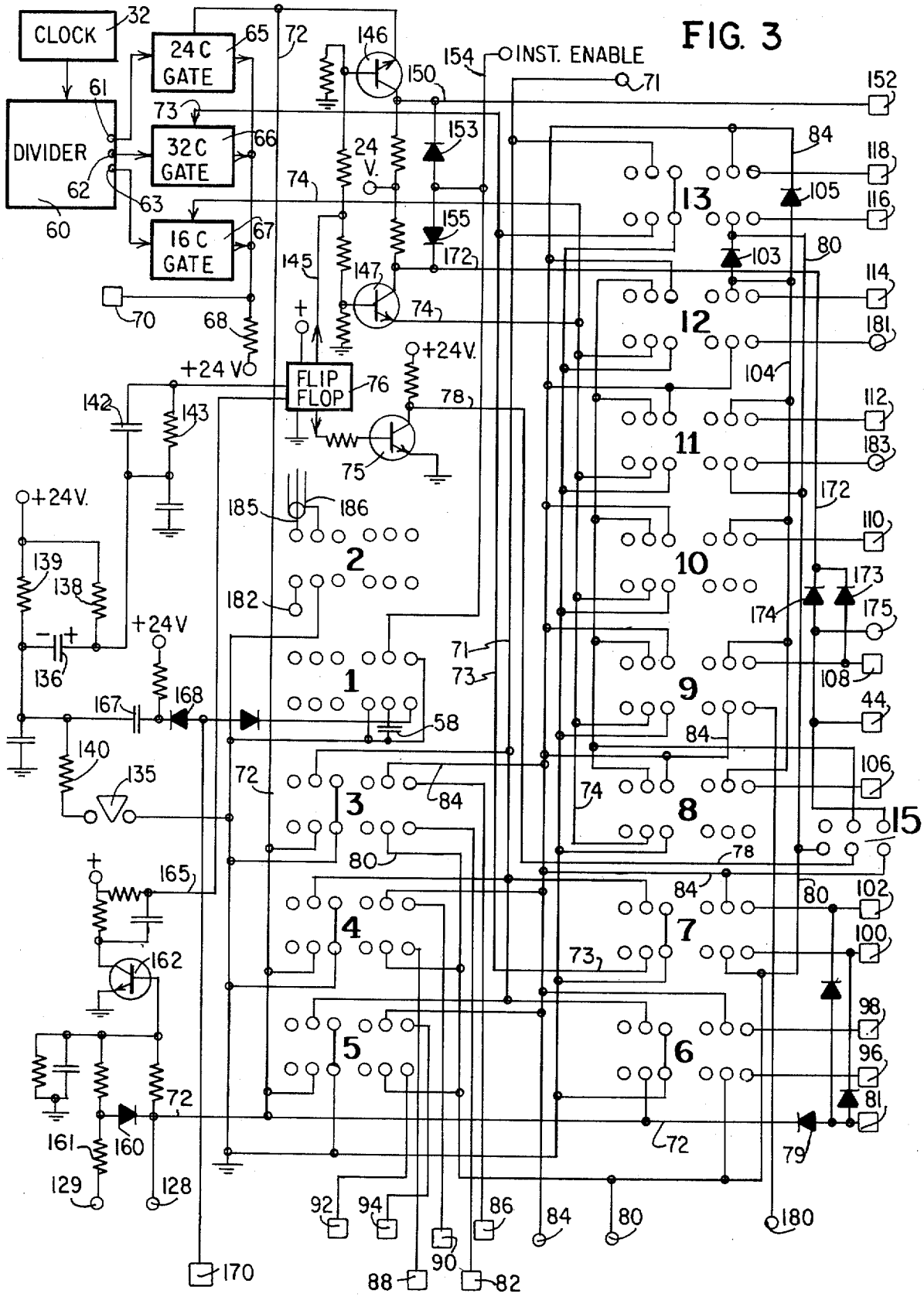
CLOCK
DIVIDER
24 C GATE
32 C GATE
16 C GATE
INST. ENABLE
FLIP FLOP
+24 V
+24V.
24 V.

FIG. 3

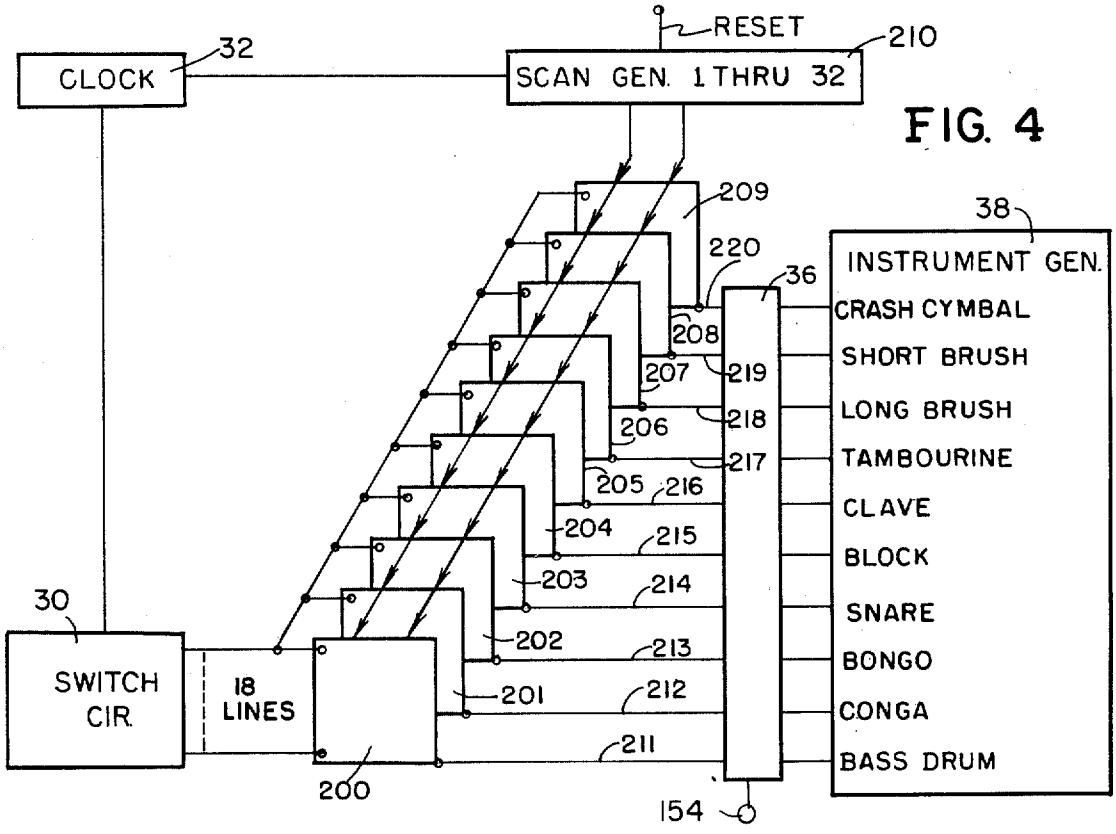
RESET
210
CLOCK
32
SCAN GEN. 1 THRU 32
209
38
INSTRUMENT GEN.
220
36
CRASH CYMBAL
208
SHORT BRUSH
207
219
LONG BRUSH
206
218
TAMBOURINE
205
217
216
CLAVE
204
215
BLOCK
203
214
SNARE
30
202
213
BONGO
SWITCH CIR.
18 LINES
201
212
CONGA
211
BASS DRUM
200
154

FIG. 4

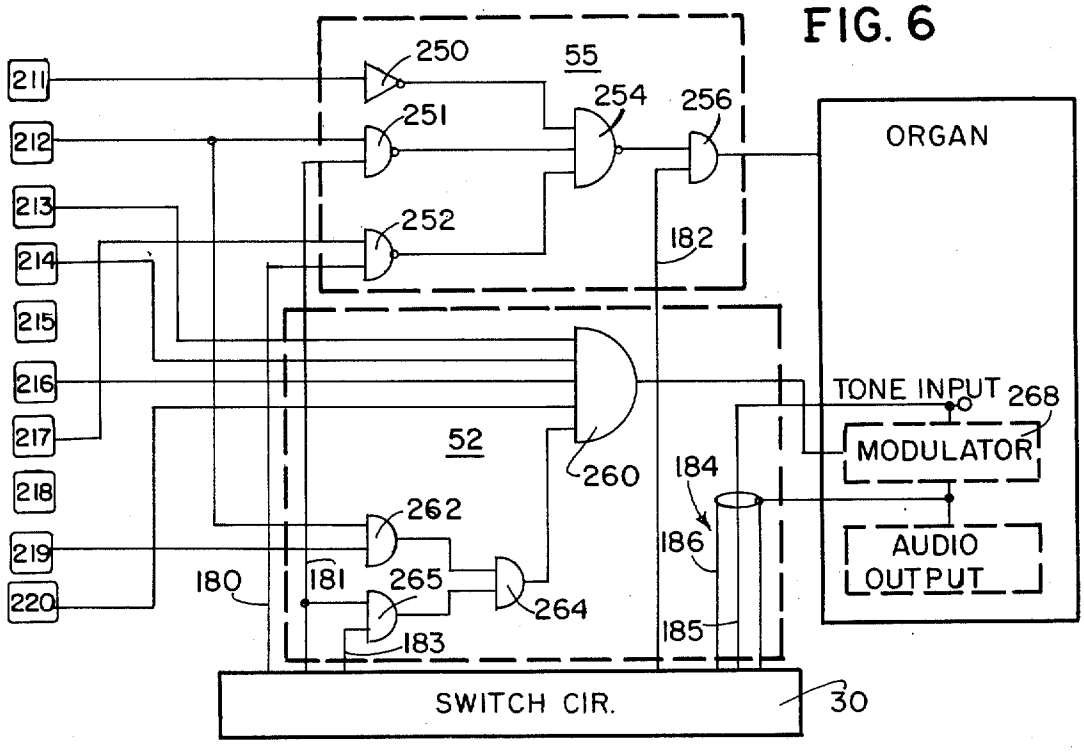
211
212
213
214
215
216
217
218
219
220
250
55
251
254
256
252
182
ORGAN
TONE INPUT
268
MODULATOR
52
260
184
262
186
AUDIO OUTPUT
180
181
265
264
183
185
SWITCH CIR.
30

FIG. 6

FIG. 5

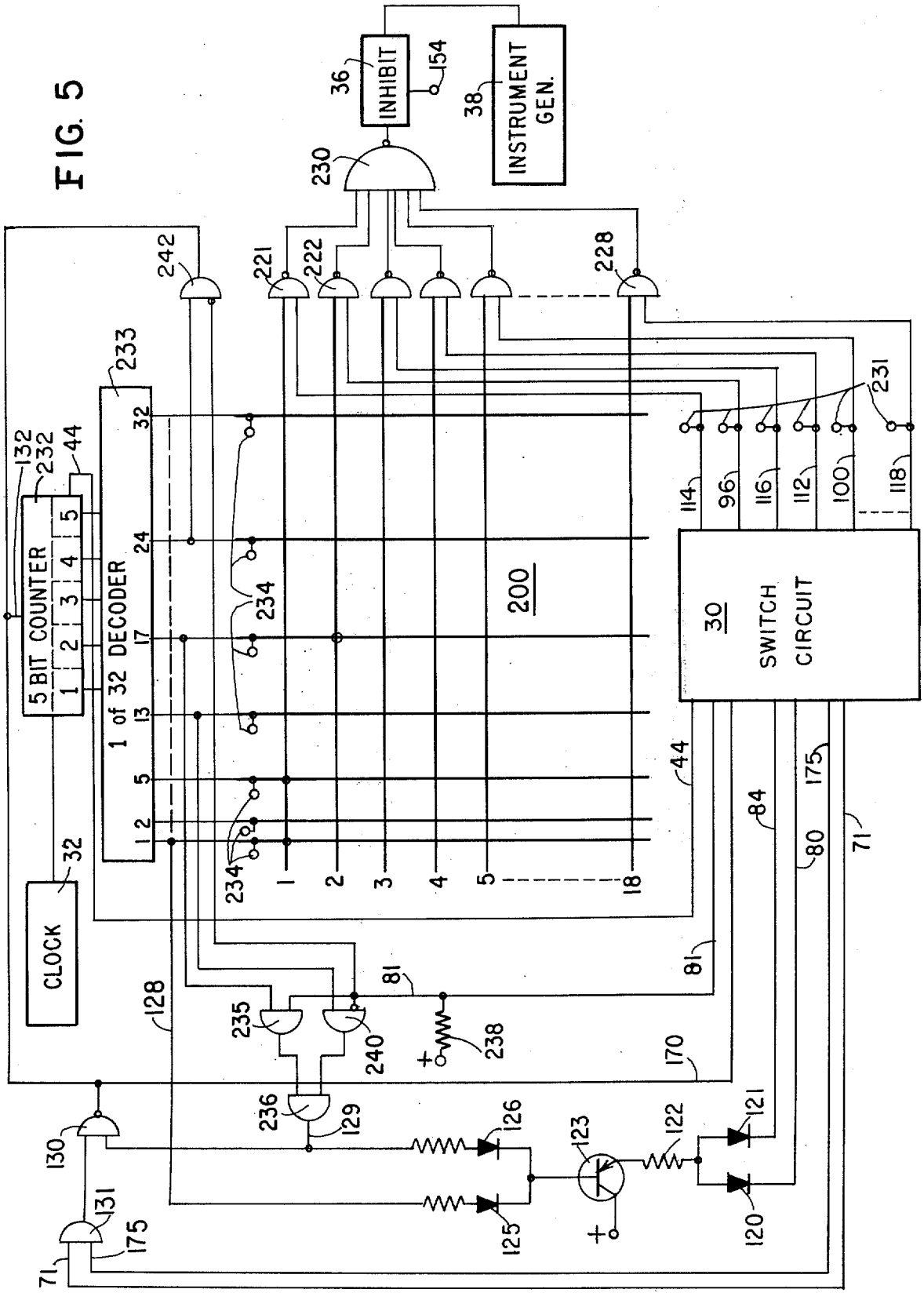
INHIBIT
INSTRUMENT GEN.
5 BIT COUNTER
1 of 32 DECODER
CLOCK
SWITCH CIRCUIT
200
30
36
38
154
230
242
221
222
228
233
132
232
44
32
24
17
13
5
2
1
1
2
3
4
5
18
234
231
114
96
116
112
100
118
84
80
175
71
81
128
235
240
238
170
236
129
126
125
123
122
121
120
130
131

AUTOMATIC RHYTHM SYSTEM PROVIDING DRUM BREAK

Matter enclosed in heavy brackets [ ] appears in the original patent but forms no part of this reissue specification; matter printed in italics indicates the additions made by reissue.

BACKGROUND OF THE INVENTION

Rhythm systems have been provided for use with electric organs, for example, so that the sounds of various rhythm instruments are automatically produced as the organist operates the keyboards and pedal board to provide organ tones. It is desired to provide various different rhythm patterns for different types of music, such as a march or waltz, and also more complex patterns such as a tango. It is also desired that the different patterns control various different rhythm instruments such as drums, brush and tambourine.

Prior systems to provide a wide variety of rhythm patterns, and which can be used to control a relatively large number of different instruments, have been complex, resulting in relatively expensive devices. Also, prior devices have not provided special effects which are desired, such as the interruption of a rhythm pattern to insert a rhythm break, such as a drum break. Although there is a substantial interest in such special effects, it has not been practical to provide the same in existing systems.

SUMMARY OF THE INVENTION

It is an object of the present invention to provide a simple and improved automatic rhythm system.

Another object of the invention is to provide an automatic rhythm system which includes a memory having a plurality of rhythms stored therein, with separate sections of the memories controlling rhythm patterns for different instruments, and with the rhythm patterns being individually selected.

A further object of the invention is to provide a rhythm system including a counter for controlling a plurality of different rhythm patterns which may have different numbers of counts and different timing, wherein the counter is automatically reset at the ends of the patterns.

Still another object is to provide a rhythm system having memory sections, with a plurality of rhythms being stored within the maximum count and available for individual selection.

Another object of the invention is to provide a rhythm system wherein the rhythm pattern for a drum break is stored in a memory and can be initiated to produce the drum sounds by touching a pushbutton.

A still further object of the invention is to provide an automatic rhythm system wherein any one of a plurality of rhythm patterns can be individually selected, and wherein the selected pattern can be interrupted for the insertion of a different rhythm pattern, such as a drum break, followed by the selected rhythm pattern.

In practicing the invention, a rhythm system is provided for automatically playing one or more of a plurality of selected rhythms. The system includes a switch circuit for selecting the rhythms and a logic circuit with memory units in which the rhythm patterns are stored. The patterns may be of different types with different numbers of counts, and the speed of the clock for reading out the patterns is controlled by the switch circuit to provide the desired rhythm patterns. The logic circuit applies pulses corresponding to the rhythm patterns to instrument generators for producing the rhythm instrument sounds. A particular rhythm may include sounds from a plurality of instruments, and a plurality of rhythms can be simultaneously played. The switch circuit cooperates with the logic circuit to reset the same at desired counts, so that the rhythm patterns are continuous. The reset may be at the beginning of the count or at an intermediate point. The memory units are identical and have facility for storing the same number of counts. Rhythms with lesser counts can be stored in series in the memory units, and the memory can be reset to pick out any one of the rhythms so stored.

The rhythm system has provisions for playing a special rhythm, such as a drum break, and this can be played at any time by operating a touch button. In the event that the special rhythm is called for when another rhythm is being continuously played, the continuous rhythm will be interrupted to provide the rhythm break, with the continuous rhythm automatically starting again at the end of the break.

BRIEF DESCRIPTION OF THE DRAWINGS

FIG. **1** shows the control panel for the rhythm system;

FIG. **2** is a block diagram of the rhythm system of the invention;

FIG. **3** is a circuit diagram of the switching circuit and the rhythm break circuit;

FIG. **4** illustrates the logic circuit and coupling to the instrument generators;

FIG. **5** shows a single memory plane with the connections thereto; and

FIG. **6** shows the strummer circuits of the rhythm system.

DETAILED DESCRIPTION

FIG. **1** shows the control panel for the instrument system of the invention, and this may be built into an organ or provided as an accessory for use with any musical instrument. The panel includes a number of pushbutton switches numbered **1** through **13**, with switch number **1** being the on-off switch for the system. Switch **2** provides control of the Strummer action and switches **3** through **13** each control two rhythm patterns. The rhythm patterns are marked above and below the switches on the panel.

A slide selector switch **15** is provided to select the rhythm pattern indicated either above (upper row) or below (lower row) the switches **3** through **13.** When the switch **15** is in the position to actuate the rhythms in the upper row, the light **16** marked UPPER flashes on the down beats and when the switch **15** is in the position to actuate the rhythms in the lower row, the light **17** marked LOWER flashes on the down beats. Accordingly, if a rhythm which is indicated above the switches **3** to **13** is desired, the selector switch **15** must be in the upper position, and if a rhythm indicated below the switch button is desired, the selector switch **15** must be in the lower position.

At the upper right side of the control panel is a TEMPO selector **18** which operates a potentiometer to control the tempo or speed of the rhythm. This is a slide operated potentiometer having positions marked **0**

through 5. A volume control selector 19 is also provided at the lower right hand side, with positions marked 0 to 5. This controls the volume of sound from the instrument generators which produce the rhythm sounds.

A plurality of touch buttons are provided along the bottom of the control panel to select other operations of the system. The button 20 designated Rhythm Break provides the insertion of a special rhythm, such as a drum break. The pushbuttons 21 to 25 each control an output of the instrument generators of the system, as indicated on the drawing. These touch buttons provide a single operation or burst of sound, rather than a continuous rhythm as provided by the switches 2 to 13 in the center of the control panel.

FIG. 2 is a block diagram of the rhythm system of the invention. The controls provided by the pushbuttons 1 to 13 on the control panel, as well as the Rhythm Break button 20 are provided in the block 30, which is designated switch circuit. The speed control 18 is shown as a variable resistor, and controls the speed of the clock 32. The clock applies pulses to a logic circuit 34 which includes memory devices. Logic patterns are stored for a plurality of different rhythm patterns for control of a plurality of rhythm instruments. Pulses for these patterns are applied from the output cable of the logic circuit through inhibit gates 36 to the instrument generators 38. The instrument generators may provide any desired number of instrument sounds, and in the system to be described 10 different rhythm instrument sounds are provided. The rhythm patterns controlling each instrument sound is applied separately from the logic circuit 34 through the inhibit gates 36 to the instrument generators 38. The signals from the generators are then applied to an audio system 40, which may include loudspeakers for reproducing the instrument sounds. It may be desired to apply the tone signals to the same audio amplifiers and loudspeakers which produce sounds for other musical tones, such as the tones of an electric organ.

The automatic pushbuttons of switch circuit 30 will select one or more of a plurality of patterns stored in the logic circuit 34, with 18 different patterns being stored in the system to be described. The logic circuit has facilities for handling rhythm patterns having up to 32 counts. The switching circuit 30 also sets up the reset circuit 42 to reset the logic circuit after the number of counts in a particular rhythm pattern. For example, rhythm patterns may be used having 16, 24 and 32 counts. The switching circuit also conditions the clock 32 to apply a particular division of the clock frequency to the logic circuit for the rhythm pattern selected.

Inasmuch as the logic circuit 34 has facilities for 32 counts, it is possible to provide two 16 count patterns within the 32 count logic. In such case, an input is applied to the logic circuit from the switching circuit 30 on line 44 so that the second pattern starts from the 17th count and continues to the 32nd count.

A down beat drive circuit 46 is provided for actuating the lights 16 and 17 on the control panel. This indicates whether the selector switch 15 is in a position for selecting the upper row or the lower row rhythms, as well as indicating the down beats.

A rhythm break circuit 48 is provided which is put into operation by actuation of the Rhythm Break switch 20 on the control panel. This is controlled by the switching circuit 30 to insert a particular rhythm pattern. If a rhythm is being played, the Rhythm Break switch will interrupt the rhythm which has been selected and insert a different rhythm. This may be a particular one of the rhythm patterns controlled the pushbuttons, or a separate rhythm pattern which is provided in the memory of the logic circuit. As previously stated, other touch buttons are provided on the control panel to select particular instruments. This action is provided by the block 50 in the diagram of FIG. 2.

The system can also be used to apply rhythm patterns to tones which may be provided by another instrument, such as an organ with which the rhythm system is used. The output from the logic circuit is applied to pulser 52 which applies rhythm patterns through switch 53 to an output terminal 54, which can control a modulator. This can be used to modulate tones from the instruments, such as chords which are provided by the accompaniment manual of an organ. A further pulsing circuit 55 is provided which is controlled by the logic circuit 34. This produces a rhythm pulse output pattern at terminal 56 which can be used to pulse a particular sound from the instrument, such as a string bass sound controlled by an organ pedal.

FIG. 3 illustrates the switching system 30, the clock 32, and the rhythm break circuit 48 of FIG. 2. The clock pulses for the logic circuit are provided by the clock 32, which may have its speed controlled as indicated by the control 18 in FIGS. 1 and 2. Pulses from the clock 32 are applied to divider 60 which has three outputs, output 61 which provides the clock frequency divided by four, output 62 which provides the clock frequency divided by three, and output 63 which provide the clock frequency divided by six. The three outputs of divider 60 are applied from terminals 61, 62 and 63 to gates 65, 66 and 67. The gates are selectively enabled so that one of the three divisions of the clock frequency is applied across resistor 68. This clock output is applied to terminal 70, which is an input terminal to the logic circuit 34 of FIG. 2.

The switches 1 through 13 on the control panel of FIG. 1, and the circuits connected thereto are shown in FIG. 3. Each of these is illustrated as a four section switch, with each section being a single pole, double throw, switch. In the OFF position, the center contact and the left contact of each section are interconnected, and in the ON position, the center contact and the right contact of each section are interconnected. In some cases only part of the switch sections are used, but in the actual device the switches are identical and all sections are shown in the drawing.

The on-off switch 1 has connections only to two sections thereof, the upper right and lower right sections. In the ON position, the upper right section provides a ground from the right contact to the center contact thereof, which is connected to the Instrument Enable terminal 154. This ground releases the inhibit gates 36 and permits operation of the instrument generators, shown as the blocks 36 and 38 in FIG. 2. Accordingly, when the rhythm system is ON, the instrument generators are enabled. The lower right section of switch 1 in the ON position connects the right contact to the center contact to provide a connection from capacitor 58 to the reset terminal 170 connected to the logic circuit. In the OFF position, the capacitor 58 is grounded by the connection between the left contact and the center contact of the lower right switch section. When the switch is turned on, capacitor 58 charges to develop a negative pulse which is applied to terminal

170 to insure that the logic circuit is reset to the number one count position.

As previously stated, the switches 3 through 13 each control two rhythm patterns which are stored in a memory in the logic circuit. The switches, in addition to selecting a part of the memory, also select the clock frequency applied to the logic circuit. The rhythm patterns controlled by switches 3 to 7 inclusive are all 24 count rhythms, the patterns controlled by switches 8 to 12 are 16 count rhythms, and the patterns controlled by switch 13 are 32 count rhythms. Two 16 count patterns associated with switches 8 to 12 are stored in sequence on a 32 count line of the memory. Considering switch 8, for example, the Fox Trot rhythm is stored in counts 1 to 16 and the Bach Rock is stored in counts 17 to 32.

The slide selector switch 15, which selects one of the two rhythms associated with each of the pushbutton switches 3 to 13, is a two section switch, with each section being a single pole, double throw, switch. To select the lower row of rhythms, the selector switch 15 is in the position that the left and center contacts of each section are connected, and to select the upper row, the switch 15 is in the position that the center and right contacts of each section are connected.

Switch 3 provides the circuits for enabling the Dixieland and Hawaiian rhythms. To select the Dixieland rhythm, switch 15 is moved to its lower row selecting position, with the left and center contacts thereof interconnected. There is no connection to the upper left contact of switch 15, so that only the lower left and center contacts are operative. Switch 3, when operated, interconnects the center and right contacts of all four switch sections. The right contact of the two left sections of switch 3 are both connected to ground, and this ground is applied by the upper left section to conductor 71, the operation of which will be described. The lower left section of switch 3 connects the ground to conductor 72 which enables the 24 count gate 65, so that the clock frequency at terminal 61 of divider 60, which is the clock frequency over 4, will be applied across resistor 68. This frequency then appears at terminal 70 which applies the clock frequency to the logic circuit. The ground on conductor 72 is applied through diode 79 to terminal 81, which is connected to the logic circuit to reset the same after 24 counts.

In the normal operation of the rhythm system, transistor 75 is rendered conductive by a positive potential applied to the base thereof from the set-reset flip-flop circuit 76. This effectively grounds the collector of transistor 75 to apply a ground to conductor 78. This conductor is connected to the center contact of the lower section of the selector switch 15. When this switch is in the lower row position, this ground is applied to the left contact thereof which is connected to conductor 80. This conductor is connected to the center contact of the lower right section of switch 3. Accordingly, the ground is applied through this switch section to the lower right contact thereof which is connected to terminal 82. This terminal is connected to the logic circuit to select the Dixieland rhythm pattern which is stored in the memory thereof.

The upper right section of switch 3 is not effective when the selector switch 15 is in the lower row position. When switch 15 is in the upper row position, so that the center and right contacts of the sections thereof are connected, the ground on the lower center contact received from conductor 78 is applied to the lower right contact, which is connected to conductor 84. This conductor is connected to the center contact of the upper right section of switch 3 and the ground thereon is applied from the right contact thereof to the terminal 86. This terminal is connected to the logic circuit, and is operative to select the Hawaiian rhythm stored in the memory thereof. Accordingly, when switch 3 is operated and the selector switch 15 is in the upper row position, the Hawaiian rhythm pattern is selected rather than the Dixieland pattern. Although the center and right contacts of the upper section of the selector switch 15 are engaged when the switch 15 is in the upper row position, this connection is effective only when one of the switches 8 through 12 is operated for a 16 count rhythm pattern.

The operation produced by the pushbutton switches 4 to 7 is essentially the same as that of the switch 3 which has been described. Switch 4 provides a ground to output terminal 88 to select the Bounce rhythm in the memory when the lower row is selected, and provides a ground to terminal 90 to select the Country and Western rhythm in the memory when the upper row is selected. Switch 5 provides a ground to terminal 92 to select the Swing rhythm when the selector 15 is in the lower row position, and provides a ground to terminal 94 to select the Swing March rhythm when switch 15 is in the upper row position. Switch 6 provides a ground to terminal 96 when the lower row is selected to provide a Bolero rhythm, and when the upper row is selected provides a ground to terminal 98 to select the Blues Shuffle rhythm in the memory. Switch 7 provides two Waltz rhythm patterns, providing the normal Waltz pattern when the selector is in the lower row position to apply a ground at terminal 100, and providing a Circus Waltz when the selector is in the upper position to provide a ground at terminal 102.

It will be noted that when switch 7 is operated to provide the Waltz patterns, the center contact of the lower left section is not connected to the conductor 72 for operating the 24 count gate 65, as is the case of switches 3 to 6. The center contact of the lower left section of switch 7 is instead connected to conductor 73 which enables the gate 66. This is the 32 count gate which passes the clock frequency divided by three. This connection is used because the timing of the 32 count clock has been found to be more appropriate for the Waltz rhythms. This applies to both the normal Waltz and the Circus Waltz.

The operation of the switches 8 through 12, inclusive, to select a rhythm pattern will now be described. As previously stated, these switches control 16 count rhythms, and the two rhythms controlled by each switch are stored on a single line in the memory. Accordingly, each switch provides a connnection to only one terminal which is connected to the logic circuit to enable one line of the memory.

Operation of the switch 8 causes the lower left section thereof to apply ground from the right terminal to the center terminal which is connected to conductor 74. This enables gate 67 to pass the clock frequency divided by six to the terminal 70. Assuming that the selector switch 15 is in the lower row position, the ground applied from conductor 78 to the center contact of the lower section is applied to the left contact thereof. This ground is applied through conductor 80, diode 103, and conductor 104 to the center contact of the upper right section of switch 8. When switch 8 is operated, this center contact is connected to

the right contact, which is connected to output terminal **106** for selecting the Fox Trot and Bach Rock patterns. The Fox Trot pattern takes up the first 16 counts, and the memory will be reset after 16 counts to repeat the pattern, in a manner to be described.

When the selector switch **15** is in the upper row position, the ground from the center contact of the lower section will be applied to the lower right contact, and to conductor **84** which is connected through diode **105** to the conductor **104.** This will continue the ground on the center contact of the upper right section of switch **8,** so that it will continue to be applied to output terminal **106.** As the selector switch **15** is in the upper row position, a connection is made through the upper section of the selector switch to output terminal **44** which provides the command to the logic circuit to start at count **17.** This circuit extends from conductor **84** to the right contact of the upper left section of switch **8** to the center contact thereof, and to the center contact of the upper section of switch **15.** Accordingly, the ground from the right contact of the lower section of selector switch **15** is applied through conductor **84** to the right contact of the upper left section of switch **8,** and through the center contacts of this switch section and of the upper section of selector switch **15** to the output terminal **44,** which causes the logic switch to scan through counts 17 to 32.

Each of the switches **9, 10, 11** and **12** operates to select two different rhythm patterns in generally the same way as described in connection with switch **8.** Switch **9** selects the Teen Beat and the Contemporary Ballad patterns, and when operated provides a ground at terminal **108** which is connected to the logic circuit to select the line in the memory in which these two rhythms are stored. Switch **10** selects the March and the Spiritual March, and when actuated provides a ground on terminal **110.** Switch **11** selects the Bossa Nova and the Sherele and provides a ground at output terminal **112.** Switch **12** selects the Rhumba and Montuna and provides an output at terminal **114** to select these two rhythms in the memory of the logic circuit.

Switch **13** provides two 32 count rhythms, in the lower row the Tango, and in the upper row the Beguine. The connections for the 32 count rhythms are generally the same as for the 24 count rhythms, except the connection from the center contact of the lower left section is to conductor **73** which enables the 32 count gate **66,** rather than to conductor **72** which enables the 24 count gate **65.** The selector switch **15** in the lower row position provides a ground from its lower left contact to the center contact of the lower contact section of switch **13,** to provide a ground at output terminal **116.** When the selector switch **15** is in the upper row position, the ground from the center contact of the lower section is transferred from the left contact to the right contact which grounds conductor **84,** to ground the center contact of the upper right hand section of switch **13.** This ground is transferred through this switch section to the right contact, which is connected to the output terminal **118.** The terminal **116** when grounded will select the Tango rhythm in the memory, and the terminal **118** when grounded will select the Beguine rhythm.

The system of the invention has provisions for inserting a rhythm break by interrupting a rhythm pattern being played. This is accomplished by operation of switch **135,** one side of which is connected to ground. The rhythm break is initiated by action of capacitor **136** which normally has no charge thereon. As shown in FIG. **3,** both sides of capacitor **136** are connected to the positive potential, the right side of resistor **138** and the left side by resistor **139,** When switch **135** is closed, ground is connected through resistor **140** to the left side of capacitor **136,** so that the capacitor **136** charges, with the left side going negative, and the right side going positive, as marked. The positive going pulse at the right side of capacitor **136** is coupled through capacitor **142** and resistor **143** to the flip-flop circuit **76.** The flip-flop circuit **76** normally provides a high potential to the base of transistor **75** to saturate this transistor so that its collector is at ground potential, as previously stated. The positive pulse applied to the flip-flop causes the same to change the potential applied to the base of transistor **75** so that it goes negative to turn off transistor **75,** and remove the ground from conductor **78.** This disables the rhythm which had been selected.

Flip-flop **76** also applies a positive potential to conductor **145,** which is connected to the base electrodes of transistors **146** and **147,** in response to the rhythm break pulse. In the event that a 24 count rhythm has been selected, a ground is present on conductor **72** which is connected to the emitter of transistor **146.** Transistor **146** is rendered conducting by the positive potential applied to its base so that the ground applied to its emitter is also applied to its collector to effectively ground conductor **150.** Conductor **150** is connected to terminal **152,** which is connected to the logic circuit to enable a drum break rhythm which is stored in the memory. The low potential on the collector of transistor **146** is also transferred through diode **153** to conductor **154** which enables the instrument generators. This is illustrated in FIG. **2,** wherein the inhibit circuit **36** is coupled between the logic circuit and the instrument generators. The ground potential on conductor **154** will remove the inhibit action of circuit **36** so that the instrument generators are operated by the logic circuit.

When the Rhythm Break button **135** is operated, the negative going potential at the junction of resistor **140** and capacitor **136** is coupled through capacitor **167** and diode **168** to terminal **170.** This terminal is connected to terminal **132** in the logic circuit to reset the same. Accordingly, operation of the Rhythm Break button assures that the logic circuit is reset so that the drum break will start on count 1.

The rhythm break is terminated at the end of the 24 count pattern by the connection from conductor **72,** which is grounded by each of the buttons controlling a 24 count rhythm. This conductor is connected to the cathode of diode **160** to ground the same. Upbeat signals from conductor **129** of the logic circuit, which are connected through resistor **161** to the anode of diode **160,** will therefore be shunted to ground. However, down beat signals from conductor **128** will be coupled to the base of transistor **162** and will be amplified and inverted thereby. The amplified signal will be applied on conductor **165** to the flip-flop circuit **76** to reset the same so that it applies a positive potential to the base of transistor **75** to saturate the same so that the collector thereof applies a ground to conductor **78.** This restores the operation of the selected rhythm pattern.

The Rhythm Break button can also be operated when a 16 count rhythm has been selected. In such case, the emitter of transistor **147** is connected to ground through conductor **74** and one of the switches **8** to **12,**

which are operated for the 16 count rhythms. Accordingly, when the Rhythm Break switch is depressed and flip-flop circuit **76** is operated, the transistor **75** is cut off and transistor **147** is rendered conducting to apply the ground potential from conductor **74** to its collector. This provides a ground on conductor **172** which is applied through diode **173** to the terminal **108,** and through diode **174** to the terminal **44.** The ground applied at terminal **108** selects the same rhythm selected by switch **9,** which includes the Contemporary Ballad. The ground applied at terminal **44** enables the 17 to 32 count circuit so that it is the rhythm in the 17 to 32 count portion of the memory which is enabled. This is the Contemporary Ballad. Diode **155** connected between the collector of transistor **147** and conductor **154** provides a ground to enable the instrument generators.

When the logic proceeds from the 17th to the 32nd count, and returns to count 17, there will be a positive pulse from the upbeat circuit on conductor **129.** This is applied through diode **160** to the base of transistor **162,** which provides a pulse at its collector to reset the flip-flop **76.** It is noted that conductor **72** is not grounded during the 16 count rhythm, so that diode **160** is not grounded as when a 24 count rhythm has been selected. Transistor **75** is then turned on to allow the previously selected rhythm to operate.

The ground applied through diode **174** is also applied to conductor **175** to disable gate **130** (FIG. **5**), as when the selector switch **15** is in the upper row position. This is required because the Contemporary Ballad is stored from the 17th to 32nd counts and the system must be in the same condition as when the selector switch **15** is in the upper row position.

The rhythm break circuit can also be operated when the on-off switch **1** is in the OFF position and no rhythm selected by switches **3** to **13** is being played. To provide the rhythm break operation in such case, one of the switches **3** to **6** or **8** to **12** must be operated. This will cause the drum break stored in the memory, and enabled by grounding conductor **152** to be played when one of the switches **3** to **6** (for a 24 count rhythm) is operated. The contemporary Ballad will be played if one of the switches **8** to **12** for a 16 count rhythm is operated when the Rhythm Break button is pressed. Although the conductor **154** which enables the instrument generators will be grounded through switch **1** in this case, it will be grounded through the diode **153** or diode **155** in response to operation of the flip-flop circuit **76** and the conduction of transistor **146** or **147,** as has been previously described.

FIG. **4** illustrates the logic circuit **34** of the block diagram of FIG. **2.** This includes a plurality of memory planes **200** to **209,** each of which stores patterns for controlling one rhythm instrument. The memory planes have a plurality of lines which are selectively enabled by the switch circuit **30,** with 18 lines being provided in one embodiment. Each memory line has 32 storage points thereon which are scanned in sequence by the scan generator **210.** Pulses from the clock **32** are applied to the scan generator **210** to control the speed of scanning. The scan generator has 32 output lines which are coupled to the 32 points of each memory plane. All of the lines of all the memory planes are simultaneously scanned.

When a point having an input stored therein is scanned, an output is produced which is applied through the inhibit circuit **36** to the instrument generator **38.** Outputs may be simultaneously produced by a plurality of lines of a plurality of planes. The outputs for all lines of each plane are provided from a single terminal, with the terminals being numbered **211** to **220.** The output from each memory plane operates one instrument, and outputs may be simultaneously applied from a plurality of planes to operate a plurality of instruments. As previously stated the instrument generators may produce 10 separate instrument sounds, which are listed in the block **38** of FIG. **4.** It is obvious that other sounds can be provided, if desired.

FIG. **5** shows the construction of one memory plane **200** in more detail, and shows the connections of the scan generator **210** and the switch circuit **30** thereto. The scan generator **210** includes a five bit counter **232** which applies signals to a one of 32 decoder **233.** The counter **232** has five stages, each of which provides a binary output, to thereby provide 32 different counts, and then resets to repeat the count. The decoder **233** responds to the five binary outputs and applies pulses on 32 output lines in sequence. The 32 lines are connected to all of the memory planes, with the connections to plane **200** being shown. Terminals **234** are shown for connection to the other memory planes **201–209.** Each pulse from the decoder **233** is simultaneously applied by a vertical line to all of the memory planes.

The memory plane **200,** as previously stated, has 18 horizontal memory lines, which are illustrated as horizontal conductors marked **1** to **5–18.** Each line has 32 storage points thereon, which may be connected to the lines from decoder **233.** The storage points may be diodes which interconnect the memory lines to the lines from the decoder for coupling pulses from the decoder to the lines on the memory planes. The points which are connected are indicated by dots at the intersection of the decoder output lines and the memory lines.

The memory plane **200** may be the plane for operating the bass drum, and the lines **1** to **18** thereof are enabled by the switching circuit **30** in accordance with the rhythm pattern or patterns selected. For example, the patterns, for the Rhumba and Montuna rhythms may be stored on line **1,** with points **1** to **16** providing the counts for the Rhumba and points **17** to **32** providing the counts for the Montuna rhythm. The 24 counts in the Bolero rhythm can be stored by the first 24 points on line **2** of plane **200,** etc. At the points along the memory lines which are to produce outputs in response to scanning, a connection is provided between the vertical lines extending from the **1** to 32 decoder and the horizontal memory lines, to thereby store information as to the counts on which an output is to be produced. Accordingly, as the one of 32 decoder sequentially applies pulses to the vertical lines, outputs will be coupled to the interconnected horizontal lines.

Each horizontal line of the memory plane is coupled to an AND gate, with line **1** being coupled to AND gate **221,** line **2** to gate **222,** line **18** to gate **288,** etc. Enabling voltages are selectively applied to the AND gates **221** to **228** from the switch circuit **30,** being applied from conductors **114, 96, 116,** etc. thereof. Accordingly, for the rhythms selected, the counts will be read out through AND gates **221** to **228** to OR gate **230.** OR gate **230** provides all of the pulses for a particular instrument, and these pulses are applied through the inhibit circuit **36** to the instrument generators **38.** A separate set of AND gates and an OR gate is provided

for each memory plane, but the same enabling conductors from switch circuit **30** are connected to the AND gates for all planes. Terminals **231** are shown on the enabling conductors for connection to the memory planes **201** to **209**, so that the corresponding lines of all memory planes are simultaneously enabled.

The down beat pulses are derived from conductor **128** which is connected to the first vertical output lines from decoder **233**, which represents the first count. The upbeat pulses are normally derived from the vertical output line from decoder **233** for the 17th count through AND gate **235** and OR gate **236**, and applied to conductor **129**. AND gate **235** is normally enabled by the positive voltage applied through resistor **238**. In the event that a 24 count rhythm is selected, a ground is applied to conductor **81**, and this removes the positive input to AND gate **235** so that the AND gate **235** is disabled. A second connection is provided to OR gate **236**, from the 13 count vertical conductor through AND gate **240**. The second input to AND gate **240** is an inverting input from the conductor **81**. Since conductor **81** is normally positive, the inverting input will disable AND gate **240**. However, when conductor **81** is brought to ground potential, the inverting input will enable AND gate **240**, so that the pulse for the 13th count will be applied therethrough to the OR gate **236**. In this instance, the pulse from the 13th count will be applied to the conductor **129** as the upbeat output.

The 5 bit counter **232** will normally reset after the 32nd count so that it operates continuously to provide the 32 outputs in sequence. When a 24 count pattern is selected, it is desired that the counter be reset at the end of the 24th count. This is accomplished by AND gate **242** which is connected to the 24 count output of decoder **214**. The gate **242** has an inverting input connected to conductor **81** which normally holds the AND gate **242** disabled. However, when conductor **81** is grounded, the inverting input enables AND gate **242** to pass the reset pulse to terminal **132** of the counter **212** to reset the same at count 24. The conductor **170** of the switch circuit **30** is also connected to terminal **132** of the counter to reset the same.

When playing a 16 count rhythm, it is necessary to reset the counter to count 1 after 16 counts have been scanned. At the 17th count, the positive going pulse developed at terminal **129** (upbeat) of the logic circuit is applied to AND gate **130**, and if this gate is enabled, the pulse is applied to the reset terminal **132** of the counter **212**. gate **130** can be disabled by a ground potential applied thereto from either conductor **71** or conductor **175** through the OR gate **131**. Conductor **71** is grounded when any one of the switches **3** to **6** or **13** is operated, and conductor **175** is grounded when any one of switches **8** to **12** is operated and the selector switch **15** is in the upper row position, and when the drum break is being played. This disables AND gate **130** when any 24 count rhythm or 32 count rhythm is being played, so that the memory will not be reset at the 16th count.

When playing 16 count rhythms stored between points **17** and **32** of the memory lines, it is necessary to reset the counter so that the output starts at the 17th count and continues to the 32nd count, and then starts again at the 17th count. This action is controlled by the conductor **44** from the switch circuit **30**. This conductor is connnected to the fifth stage of the counter **232** to hold this stage operative when a ground is present on conductor **44**. It is well known that in a 5 bit binary counter, the first four stages operate for a count of **16**, and then the fifth stage operates and the first four stages repeat their operation for counts from 17 to 32. By holding the fifth stage operative, the counter **232** counts only from 17 to 32, with the sequence repeating as clock pulses are applied.

FIG. **5** shows the coupling of indicator lights to the logic circuit. Conductor **80** from the switch circuit **30**, which is grounded when the selector switch **15** is in the lower row position, is connected to the cathode of a light emitting diode **120**, and conductor **84**, which is grounded when switch **15** is in the upper row position, is connected to the cathode of light emitting diode **121**. The anodes of these diodes are connected through resistor **122** and the emitter to collector path of transistor **123** to plus 24 volts. When the transistor **124** conducts and the conductor **80** (or **84**) is grounded, the diode **120** (or **121**) will be illuminated. Transistor **123** is controlled from the logic circuit by an OR gate circuit including diodes **125** and **126**. At the down beat (count **1** of each rhythm pattern), the ground applied from terminal **128** of the logic circuit renders transistor **123** conducting so that one of the lamps **120** or **121** is illuminated when the conductor **80** or **84** connected thereto is grounded. A second terminal **129** of the logic circuit provides a ground to diode **126** to render transistor **123** conducting on the upbeat (count **17** or count **13**). Accordingly, the diodes **120** and **121** which form the lights **16** and **17** on the control panel, indicate the beats in the rhythm pattern which is selected.

FIG. **6** shows the circuit for providing the strummer effects which were referred to in connection with FIG. **2**. The terminals **211** to **220** along the left side are the outputs from the memory planes to the instrument generators, which are shown in FIG. **4**. All 10 outputs are shown although only eight of the outputs are utilized in the circuit of FIG. **6**.

The strummer panel pulser circuit **55** (FIG. **2**) includes an inverter **250** to which the pulses for actuating the base drum are applied from terminal **211**, an AND gate **251** to which the Conga pulses are applied, and an AND gate **252** to which the Tambourine pulses are applied. The AND gate **251** is enabled by a potential from the switch circuits **30** applied on conductor **181**, and the AND gate **252** is enabled by a potential from the switch circuit **30** applied on conductor **180**. The outputs of the inverter **250** and the AND gates **251** and **252** are applied to OR gate **254** which passes all of the pulses to the AND gate **256**. The AND gate **256** is enabled when the strummer switch **2** (FIG. **3**) is operated. In the OFF position, the strummer switch grounds the conductor **182** to disable the AND gate **256**, and this ground is removed when the switch is turned on. The output of the AND gate **256** is applied to the organ and may be used with a potential derived from the pedal switch of the organ, so that when there is an output from AND gate **256** and a pedal is operated, the pedal tone will be pulsed in accordance with the pulses applied to the AND gate **256**.

The strummer note pulser **52** is also shown in FIG. **6**, and includes a five input OR gate **260** to which the Bongo, Snare, Clave and Cymbal pulses are applied. The Conga and Short Brush pulses are applied to a two input OR gate **262** which applies the same to AND gate **264**. The AND gate **264** is enabled by a second input derived from the OR gate **265**. Conductors **181** and **183** are connected to the OR gate **265** to produce an output for enabling the AND gate **264** when either of

switches **11** or **12** is operated to provide the Rhumba or Bossa Nova rhythms. The output of AND gate **264** is applied as the fifth input to OR gate **260,** to be combined with the other rhythm pulse inputs applied thereto.

The output from OR gate **260** is applied to a modulator **268** which may be provided in an electric organ. The tone inputs from the organ are selectively applied to the modulator by known organ circuitry, and the modulator **268** interrupts or strums the tones in accordance with the particular rhythm patterns which are applied thereto from OR gate **260.** The output of the modulator is applied to audio amplifiers and transducers, as in standard electric organs. For disabling the action of the modulator, a coaxial line **184** is provided having a center conductor **185** connected to the tone input, and an outer conductor **186** connected to the output of the modulator **168.** The center connector **185** and the outer conductor **186** are selectively shorted by the upper left section of strummer switch **2** of the switch circuit **30** (FIG. **3**) when it is in the OFF position. This applies the audio tones directed to the audio output, bypassing the modulator. When the strummer switch **2** is operated, however, the short is removed from the coaxial line **184** so that the tones are applied through the modulator to the audio output. This may be used to interrupt or strum chords supplied from the accompaniment manual of the organ to the audio output.

The automatic rhythm system which has been described is easily operated by an organist or one playing another instrument, and will automatically provide one of a relatively large number of different rhythm patterns, with the speed and volume being controlled by the operator. By utilizing each pushbutton for two rhythm patterns, with a selector for selecting the one desired, the number of controls is substantially reduced. Each rhythm pattern may cause operation of one or more rhythm or percussion instruments, and a plurality of rhythm patterns can be operated at the same time. A rhythm break can be provided, either while playing another rhythm pattern, or when no other rhythm is being played. The rhythm break can be one of a number of different breaks, such as a drum break, depending upon the rhythm pattern which is selected. If the rhythm on-off switch is in the ON position, the rhythm selected will play, but if it is in the OFF position, the rhythm will not play but the break will be provided when the Rhythm Break button is pressed. Other touch buttons are provided for inserting other percussion sounds, such as a Crash Cymbal or a Snare Drum Roll, upon actuation by the operator.

The rhythm patterns are stored in memory elements which are arranged so that the maximum number of rhythm patterns are provided in a minimum amount of storage. The memory elements are controlled by a logic circuit coupled to a switch circuit which is actuated by the pushbuttons, the selector switch and the rhythm break switch. The switching circuit also controls the clock frequency through a divider, with a variable tempo control also being available for controlling the clock frequency. The various circuits are integrated in a single system so that the overall equipment can be provided as a compact and inexpensive unit.

I claim:

1. An automatic rhythm system, including in combination,

memory means having a plurality of selectively enabled sections for storing rhythm patterns, each of said sections having a plurality of inputs and selectively enabled output means, with said inputs being selectively coupled to said output means in accordance with a rhythm pattern,

scanning means connected to said memory means and having portions individually connected to said inputs of a plurality of said sections for applying pulses to said inputs in sequence in response to the application of clock pulses thereto,

clock means for applying clock pulses to said scanning means, and

switch means including a plurality of selectively operated circuits connected to said clock means and to said output means of said sections of said memory means, one of said switch circuits controlling the application of clock pulses to said scanning means, and a plurality of other switch circuits selectively enabling said output means of predetermined sections of said memory means to thereby select a desired rhythm pattern.

2. The system of claim **1** wherein each section of said memory means includes a plurality of storage elements coupled to said inputs and selectively enabled in turn by pulses applied thereto by said scanning means.

3. The system of claim **2** wherein each section of said memory means has a plurality of portions, and each of said portions includes an output and a plurality of storage elements associated with a rhythm pattern individually coupled between such output and said plurality of inputs.

4. The system of claim **3** wherein at least one of said portions includes storage elements associated with two different rhythm patterns.

5. The system of claim **4** wherein the storage elements of said portion of said memory section associated with one of said rhythm patterns are coupled to said inputs to receive a first sequence of pulses from said scanning means, and the storage elements of said portion of said memory section associated with said other pattern are coupled to said inputs to receive a second sequence of pulses from said scanning means.

6. The system of claim **5** wherein said switch means applies potentials to said scanning means to selectively start and reset the same to apply pulses to said memory means in said first and second sequences.

7. The system of claim **3** wherein said portions of each section of said memory means are adapted to store rhythm patterns having different numbers of counts.

8. The system of claim **7** wherein said switch means applies a potential to said scanning means to reset the same at the number of counts associated with said rhythm pattern selected.

9. The system of claim **1** wherein said clock means includes divider means having a plurality of outputs for producing clock pulses of different frequencies.

10. The system of claim **9** wherein said switch means selectively applies pulses from one of said outputs of said clock means to said scanning means in accordance with the rhythm pattern selected.

11. The system of claim **2** wherein said scanning means includes counter means for receiving pulses from said clock means, and decoder means coupled to said counter means for applying pulses in sequence to said inputs of said sections of said memory means for enabling said storage elements thereof in turn.

12. The system of claim 11 including means coupling said switch means to said counter means for starting and resetting the same in accordance with the rhythm pattern selected by said switch means.

13. The system of claim 1 wherein said switch means includes a first group of switches each operable to select two rhythm patterns, and a second selector switch coupled to said switches of said first group for selecting one of the two rhythm patterns selected thereby.

14. The system of claim 13 including first and second indicator lights and circuit means for energizing the same coupled to said selector switch to indicate the positions thereof.

15. The system of claim 14 wherein said circuit means for operating said indicator lights is coupled to said scanning means for operating said lights in accordance with a beat of the selected rhythm pattern.

16. The system of claim 1 further including, instrument generator means for producing sounds of a plurality of rhythm instruments and having terminals for receiving potentials for controlling the individual instrument sounds, and means individually coupling said output means of said sections of said memory means to said terminals for producing said sounds in accordance with rhythm patterns selected by said switch means.

17. The system of claim 16 wherein said switch means includes a first group of switches for operating said switch circuits for causing selected rhythm patterns to be operated continuously, with said switches of said first group being operated to select one or more rhythm patterns, and a second group of switches for operating a circuit coupled to said terminals of said instrument generator means for causing a single operation thereof.

18. The system of claim 1 further including control means for receiving musical instrument signals, and means selectively coupling said output means of said sections of said memory means to said control means for controlling the instrument signals in accordance with the pulse train patterns produced at said enabled output means of said sections of said memory means.

19. The system of claim 18 wherein said control means includes a keyer for keying the musical instrument signals.

20. The system of claim 18 wherein said control means includes a modulator for modulating the musical instrument signals.

21. The system of claim 1 including a touch operated switch coupled to one of said switch circuits for disabling said output means of the memory section selected by said switch means and enabling said output means of a predetermined memory section for insertion of a special rhythm pattern, with said scanning means being coupled to said switch circuit to operate the same at the end of a single rhythm pattern to disable said output means of the predetermined memory section and enable said output means of the section selected by said switch means.

22. An automatic rhythm system, including in combination,

memory means having a plurality of selectively enabled sections for storing rhythm patterns with one of said sections storing a special rhythm pattern, each of said sections having selectively enabled output means,

scanning means connected to said sections of said memory means for reading out said patterns as pulse trains to said output means in response to the application of clock pulses thereto,

clock means for applying clock pulses to said scanning means, and

switch means including a plurality of rhythm selector switches, a rhythm break switch and circuit means controlled by said switches and connected to said scanning means and to said output means of said memory sections, said rhythm selector switches being operative to cause said circuit means to selectively enable said output means of predetermined sections of said memory means, said circuit means having a portion connected to said rhythm break switch and rendered operative thereby in response to operation of one of said rhythm selector switches to enable said one section of said memory means to produce the special rhythm pattern.

23. The system of claim 22 wherein said sections of said memory means have rhythm patterns stored therein having first and second numbers of counts, and include first and second memory sections having special rhythm patterns stored therein having said first and second numbers of counts, and wherein said circuit portion operates in response to operation of said rhythm break switch to select one of said first and second memory sections to produce a special pattern having the same number of counts as the pattern selected by said selector switch.

24. The system of claim 22 wherein said switch means further includes a rhythm ON switch operative for causing said circuit means to enable the memory section associated with the rhythm pattern selected by an operated rhythm selector switch, said circuit portion operating in response to operation of said rhythm break switch to disable the memory section for the selected rhythm and to enable said one memory section whereby the special rhythm pattern is inserted in place on the selected rhythm, and said circuit portion operating to enable said one memory section in response to operation of said rhythm break switch when said rhythm ON switch is inoperative.

25. The system of claim 24 wherein said circuit portion is connected to said scanning means to disable said one memory section when the special rhythm pattern is completed and to enable the selected memory section when said rhythm ON switch is operative.

26. An automatic rhythm system, including in combination,

memory means having a plurality of selectively enabled sections for storing rhythm patterns with one of said sections storing a special rhythm pattern, each of said sections having selectively enabled output means;

scanning means connected to said sections of said memory means for reading out said patterns as pulse trains to said output means in response to the application of clock pulses thereto;

clock means for applying clock pulses to said scanning means; and

switch means including a plurality of rhythm selector switches, a rhythm break switch and circuit means controlled by said switches and connected to said scanning means and to said output means of said memory sections, said rhythm selector switches being operative to cause said circuit means to selectively enable said output means of predetermined sections of said memory means, said circuit means

having a portion connected to said rhythm break switch and rendered operative thereby in response to operation of said rhythm break switch to enable said one section of said memory means to produce the special rhythm pattern.

27. The system of claim 26, wherein said switch means further includes a rhythm ON switch operative for causing said circuit means to enable the memory section associated with the rhythm pattern selected by an operated rhythm selector switch, said circuit portion operating in response to operation of said rhythm break switch to disable the memory section for the selected rhythm and to enable said one memory section whereby the special rhythm pattern is inserted in place of the selected rhythm.

* * * * *