May 15, 1962 J. W. JACOBS 3,034,519

DISHWASHER

Filed Oct. 31, 1960

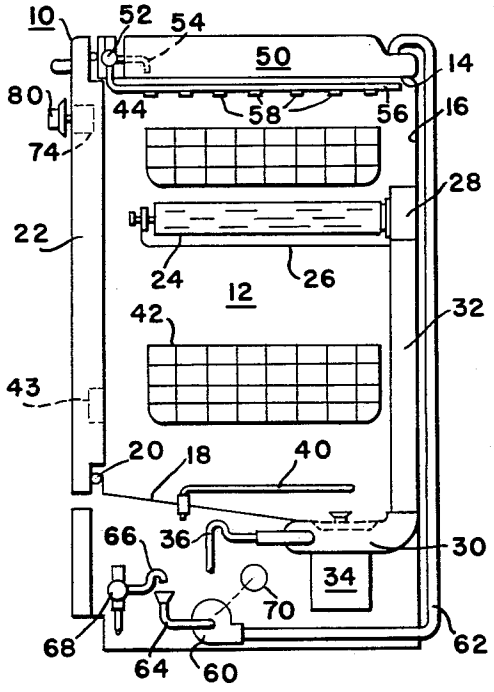

Fig. 1

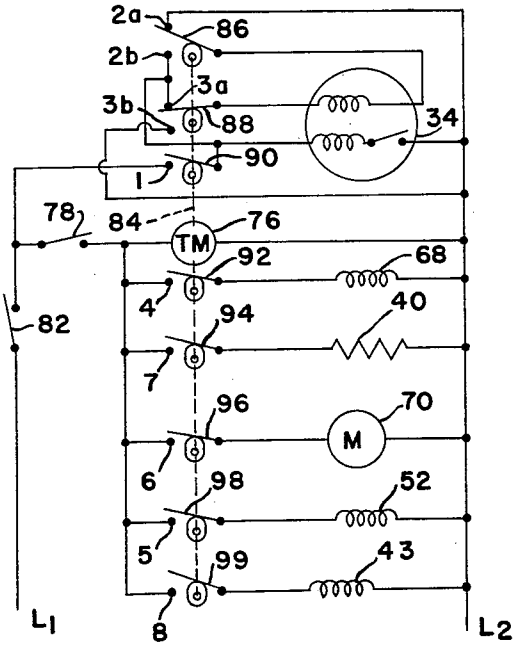

Fig. 2

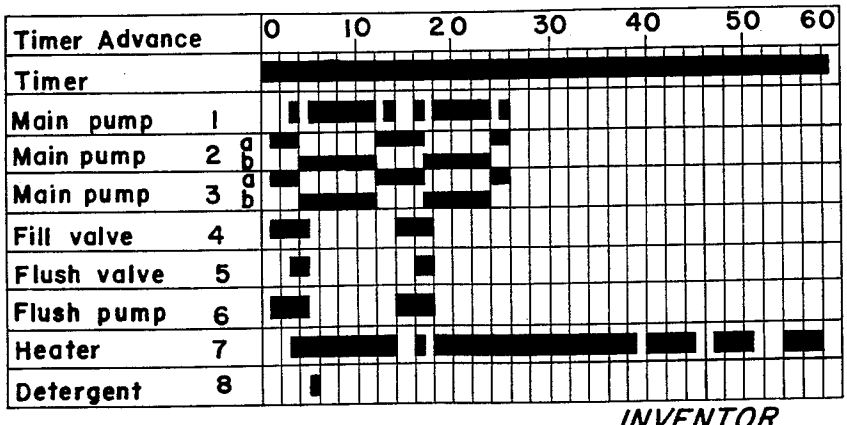

Fig. 3

INVENTOR
James W. Jacobs
By Frederick M. Ritchie
His Attorney

United States Patent Office 3,034,519
Patented May 15, 1962

3,034,519

DISHWASHER

James W. Jacobs, Dayton, Ohio, assignor to General Motors Corporation, Detroit, Mich., a corporation of Delaware

Filed Oct. 31, 1960, Ser. No. 66,340
9 Claims. (Cl. 134—95)

This invention relates to a domestic appliance and more particularly to an improved dishwasher.

Prior to a dishwashing cycle, dishes may be exposed to a variety of manual prewashing or flushing operations by the operator. In many instances, however, excess soil remains on the dishes when they are stored in the dishwasher. At the start of a dishwashing cycle this soil is flushed from the surface of the dishes and enters the water circulating system.

Accordingly it is an object of this invention to precede a dishwashing cycle with a pressurized flushing operation which, in conjunction with drain pump operation, forces all excess soil to drain before the dishwashing portion of the cycle begins.

It is also an object of this invention to provide a dishwasher with a water storage tank which may be pressurized with a fluid that can then be selectively ejected over the surface of the dishes in a pressure flush operation.

A more general object of this invention is the provision in a dishwasher of means for pressure flushing the dishes prior to a dishwashing cycle to reduce redeposition of food soil on the dishes during the dishwashing cycle.

A more specific object of this invention is the provision for a dishwashing chamber of a storage tank having a jet nozzle in said chamber, means for supplying said tank with water under pressure, means for selectively circulating water in said dishwashing chamber and to drain, and means for controlling said supplying means to pressurize said storage tank for pressure flushing said dishes and said circulating means for draining during a pressure flush operation in the advance of a dishwashing cycle.

Further objects and advantages of the present invention will be apparent from the following description, reference being had to the accompanying drawings wherein a preferred embodiment of the present invention is clearly shown.

In the drawings:

FIGURE 1 is a generally side sectional schematic view of a dishwasher provided with this invention;

FIGURE 2 is a schematic wiring diagram for this invention; and

FIGURE 3 is a timer cycle chart showing the sequential positioning of the timer contacts in FIGURE 2.

In accordance with this invention and with reference to FIGURE 1 a dishwasher **10** is illustrated. The dishwasher **10** is comprised of a casing forming a dishwashing chamber **12** and having a top wall **14**, a back wall **16**, and a bottom sump **18**. The dishwashing chamber has a front opening **20** which is closed by a horizontally hingedly mounted door **22**. A spray tube or spray device **24** is rotatably mounted at its front end on a rod support **26** in the dishwashing chamber **12** and is rotatably retained at the rear wall of the dishwashing chamber **12** on a swirl producing header **28**. A pump of the type taught in the copending application S.N. 792,158 filed February 9, 1959 and assigned to the same assignee as

this invention is connected to the swirl header **28** by a supply conduit **32**. The pump **30** may be driven by a reversible motor **34** which is adapted, when reversed, to cause the pump to direct water to a drain through a reduced diameter conduit **36**. Note that the difference in size of conduits **32** and **36** permits the pump **30** to recirculate approximately 35 gallons per minute to the spray tube **24** whereas approximately 9 gallons per minute is directed to drain when the pump is reversed. This flow differential will facilitate the operation of a pop-up filter device such as taught in the patent to Abresch et al. 2,808,063 issued October 1, 1957, and to which reference may be had for additional details on the construction of the dishwasher **10**.

In accordance with conventional practice a heater **40** may be disposed in the sump **18** for heating the recirculating fluid throughout the dishwashing cycle. Also conventional is the slidable positioning of the support baskets such as **42**, and **44** on opposite sides of the spray tube **24** to expose the dishes to the maximum effects of the spiraling spray in the dishwashing chamber **12**. A detergent dispenser **43** may be selectively actuated by a solenoid to dispense a washing agent to the washing chamber at the proper time in the operating cycle.

In the prior art no provision has been made for flushing excess soil from the dishes and then disposing of such soil to drain before the washing or water circulation portion of the washing cycle begins. Even the pop-up filter of the Abresch et al. teaching permits certain amounts of soil to escape under the filter and into the recirculating system before the filter can seat. It is thus an object of this invention to insure that substantially all excess soil is flushed from the surface of the dishes before the recirculating dishwashing cycle commences. It would be desirable and less expensive if the line pressure of a domestic water supply could be used to jet or spray off the dishes in the dishwashing chamber. However, code requirements generally require an air gap in the water supply line to prevent back syphoning of the dishwashing fluid into the domestic water supply. Consequently this invention incorporates a pressure flush which is independent of the domestic water supply.

In accordance with this invention a closed or air-tight storage tank **50** suitable for pressurizing is installed over the top wall **14** of dishwashing chamber **12**. The tank **50** is selectively connected to the dishwashing chamber **12** by a solenoid operated flush valve **52** which has its inlet **54** connected to the inside of the pressure tank or storage tank **50** and its outlet to a pressure flush conduit **56** to which are attached a plurality of jet action spray nozzles **58**. These nozzles may be positioned on one or more conduits to achieve the best possible coverage of the dishes. Thus when the valve **52** is energized the conduit **56** is opened to the pressurized tank **50**, any liquid therein under pressure will be forced through the conduit **56** to the spray jet nozzles **58**. These forceful jets of water will impinge on the surfaces of the dishes from the top of the dishwashing chamber.

As aforesaid the storage tank **50** cannot be connected directly to the domestic water supply in view of the requirements for an air gap. For supplying the tank **50** with water and for pressurizing this tank a flush pump **60** is located in the bottom of the dishwasher and has an outlet connected to the storage tank by way of a storage

tank conduit 62. The inlet 64 to the pump 60 is spaced from a water supply conduit 66 and is supplied by a solenoid actuated fill valve 68 in a conventional domestic water supply line. For selectively operating the pump 60 a flush pump motor 70 is included. Whenever the pump 60 is operating with the valve 68 open, water will be forced into the tank 50 under a back pressure of air compressed in the upper part of the tank. The amount of pressure which can be built up in the storage tank depends on the size and efficiency of the pump 60 and will be tailored to the jet force required to flush off the dishes.

The sequentially operated circuitry of dishwasher 10 is controlled by a timer 74 having a timer motor 76 which is selectively energized by a line switch 78 closed whenever the timer control knob 80 is depressed or pushed inwardly. The circuitry also includes a door switch 82 which is closed whenever the door 22 is in the closed position of FIGURE 1. The timer motor 76 is adapated to intermittently rotate a timer shaft 84 to selectively and sequentially open and close a plurality of cam actuated switches. More particularly the reversible motor 34 is contitioned for operation by reversing switches including a cam actuated switch 86 which operates between a clockwise or drain timer contact 2*a* and a counter-clockwise or wash contact 2*b*. Actuated with switch 86 as the other half of the reversing switch arrangement is a cam actuated timer switch 88 which operates between a clockwise or drain timer contact 3*a* and a counter-clockwise timer contact 3*b*. The circulating pump motor 34 is energized generally through a cam actuated timer switch blade 90 which opens and closes a timer contact 1.

The remainder of the dishwashing components are selectively energized as follows. The hot water supply fill valve 68 is selectively energized through a cam actuated switch blade 92 which opens and closes a timer contact 4; the heater 40 is energized through a cam actuated timer switch blade 94 which opens and closes a timer contact 7; a flush pump motor 70 is energized through a cam actuated switch blade 96 which opens and closes a timer contact 6; the flush valve 52 is selectively energized through a cam actuated timer switch blade 98 which opens and closes the timer contact 5; and the detergent dispenser 43 may be energized through a cam actuated timer switch blade 99 which opens and closes a timer contact 8.

In operation the dishwashing cycle is started after the dishes are loaded in the support baskets 42 and 44, detergent added to the dispenser 43, the door 22 closed and the timer started by pushing inwardly the knob 80 to close the line switch 78. Door switch 82 will be closed when the door 22 is closed. The selective and sequential functioning of the various cam actuated timer switches is depicted in the timer cycle chart of FIGURE 3 to which reference may be had for switch positioning at any given point in the dishwashing cycle.

At the beginning of the dishwashing cycle, namely the second timer increment, the timer contacts 2*a*, 3*a* for the reversible motor 34 are closed to condition the pump 30 for clockwise rotation. This will permit the pump to operate in a manner to force the fluid to the drain line 36. At the same time the timer contact 4 will be closed as will the timer contact 6 to the fluish pump 70. Thus, power will flow to the fill valve 68 from L1, door switch 82, line switch 78, the timer switch blade 92, the fill valve solenoid 68, to the other side of the line L2. Simultaneously the pump motor 70 will be energized from L1 through door switch 82, line switch 78, timer switch blade 96, the flush pump 70 to the other side of the line L2. Water will then be supplied to the inlet conduit 64 of the flush pump 60 by way of the air gap, thereby preventing any back syphoning into the domestic water supply system while still permitting the pump 60 to pressurize the storage tank 50. The duration of the flush tank fill will depend on the size of the tank 50 and the amount of pressure under which is it desired

to store the liquid, i.e., the amount of pressure to which the air in the top of the tank 50 is subjected. At the conclusion of the third timer increment the main pump timer switch 90 is closed on contact 1 to energize the main pump motor 32 for the drain operation. Simultaneously therewith, the flush valve 52 is energized when timer switch blade 98 closes on contact 5 to energize the flush valve 52. The pressurized water stored in the tank 50 will rush to the nozzles 58 and eject therefrom forcibly over the surfaces of the dishes in the baskets 42 and 44. The soil and sediment flushed from the dishes will fall by gravity into the sump 18 where the pump 30 will force the waste and the flush water to drain. The pressurized down flush action continues until the tank 50 is emptied or depressurized—the flush pump motor 70 remaining energized to insure that stored water cannot back flow through the flush pump. The main pump motor is then reversed by positioning the timer switch blades 86 and 88 onto timer contacts 2*b* and 3*b* respectively. This set up will rotate the pump 30 in a manner to produce a recirculation of water through the conduit 32 to the spray tube 24. As the pump motor is reversed, the flush valve 52 and the fill valve 68, which have remained energized along with the flush pump motor 70 during the pressurized flushing operation, now start to fill the sump 18. Thus water for the dishwashing cycle is supplied by way of the flush pump to the dishwashing chamber 12 through the storage tank 50 and the nozzles 58. After a timed interval in which the desired amount of water has been supplied to the sump 18, the main pump timer switch 90 is closed on contact 1 at the start of the sixth timer increment to energize the motor 32. Then for a predetermined period a recirculating wash cycle occurs.

After the recirculating wash portion of the dishwashing cycle is concluded at the end of the 12th timer increment, the pump motor 32 is reversed to pump the soiled washing liquid to drain. At the beginning of the 15th timer increment another pressure flush cycle is set up by energizing the fill valve 68 and the flush pump motor 70—the flush valve being closed—to pressurize the storage tank 50. The first rinse is thus preceded by a pressure down flush identical with that which preceded the wash portion of the dishwashing cycle. If more than one rinse is desired, each subsequent rinse thereafter is also preceded by a down flush of the pressurized type.

Subsequent to the last rinsing operation the heater 40 is energized with the timer switch 94 closed on the timer contact 7 and the cycle concludes with a drying operation.

It should now be seen that an improved dishwashing cycle has been taught in which a pressurized down flush operation commences the dishwashing cycle—the sediment removed during the pressure flush being directed simultaneously to drain.

While the embodiment of the present invention as herein disclosed, constitutes a preferred form, it is to be understood that other forms might be adopted.

What is claimed is as follows:

1. A dishwasher comprising means forming a dishwashing chamber having a top wall, a back wall and a bottom sump, a rotatable spray device supported on said back wall, a main pump connected to said sump and adapted to direct water to said spray device during a water recirculation operation, an air-tight water storage container overlying said top wall, conduit means connecting said water storage container to said dishwashing chamber, said conduit means having a plurality of spray nozzles overlying said dishwashing chamber for pressure flushing said chamber, first valve means in said conduit means for selectively connecting said water storage container to said spray nozzles, means for supplying water to said water storage container including a second valve means connected to a domestic water supply and having a valve outlet, a flush pump having a

pump inlet and a pump outlet, said pump inlet connected in spaced air gap relationship to said valve outlet and said pump outlet connected to said water storage container, and timer means for sequentially controlling said first and second valve means and said flush pump for said pressure flushing operation prior to said water recirculation operation, said timer means including means for energizing said flush pump and said second valve means for a predetermined period in advance of the energization of said first valve means to pressurize said storage tank.

2. A dishwasher comprising means forming a dishwashing chamber having a top wall, a back wall and a bottom sump, a rotatable spray device supported on said back wall, a main pump connected to said sump and adapted to direct water to said spray device during a water recirculation operation, means for selectively supplying a washing agent to said chamber for said water recirculation operation, an air-tight water storage container overlying said top wall, conduit means connecting said water storage container to said dishwashing chamber, said conduit means having a plurality of spray nozzles overlying said dishwashing chamber for pressure flushing said chamber, first valve means in said conduit means for selectively connecting said water storage container to said spray nozzles, means for supplying water to said water storage container including a second valve means connected to a domestic water supply and having a valve outlet, a flush pump having a pump inlet and a pump outlet, said pump inlet connected in spaced air gap relationship to said valve outlet and said pump outlet connected to said water storage container, and timer means for sequentially controlling said first and second valve means and said flush pump for said pressure flushing operation prior to said water recirculation operation and for controlling said washing agent supplying means, said timer means including means for energizing said flush pump and said second valve means for a predetermined period in advance of the energization of said first valve means to pressurize said storage tank and for energizing said washing agent supplying means after said pressure flushing operation.

3. A dishwasher comprising means forming a dishwashing chamber having a top wall, a back wall and a bottom sump, a rotatable spray device supported on said back wall, a main pump connected to said sump and energizable to direct water selectively to said spray device during a water recirculation operation or to drain, means for selectively supplying a washing agent to said chamber for said water recirculation operation, an air-tight water storage container overlying said top wall, conduit means connecting said water storage container to said dishwashing chamber, said conduit means having a plurality of spray nozzles overlying said dishwashing chamber for pressure flushing said chamber, first valve means in said conduit means for selectively connecting said water storage container to said spray nozzles, means for supplying water to said water storage container including a second valve means connected to a domestic water supply and having a valve outlet, a flush pump having a pump inlet and a pump outlet, said pump inlet connected in spaced air gap relationship to said valve outlet and said pump outlet connected to said water storage container, and timer means for sequentially controlling said first and second valve means, said main pump and said flush pump for said pressure flushing operation prior to said water recirculation operation and for controlling said washing agent supplying means, said timer means including means for energizing said main pump to direct water to drain and said flush pump and said second valve means for a predetermined period in advance of the energization of said first valve means to pressurize said storage tank and for energizing said washing agent supplying means and said main pump to direct water to said spray device after said pressure flushing operation.

4. A dishwasher comprising means forming a dishwashing chamber having a sump, means for recirculating water in said chamber during a water recirculation operation, an air-tight water storage container for said chamber, conduit means connecting said water storage container to said dishwashing chamber, said conduit means having a spray nozzle in said dishwashing chamber for pressure flushing said chamber, first valve means in said conduit means for selectively connecting said water storage container to said spray nozzle, means for supplying water to said water storage container including a second valve means connected to a domestic water supply and having a valve outlet, a flush pump having a pump inlet and a pump outlet, said pump inlet connected in spaced air gap relationship to said valve outlet and said pump outlet connected to said water storage container, and timer means for sequentially controlling said first and second valve means and said flush pump for said pressure flushing operation prior to said water recirculation operation, said timer means including means for energizing said flush pump and said second valve means for a predetermined period in advance of the energization of said first valve means to pressurize said storage tank.

5. In combination, casing means forming a dishwashing chamber having a sump, water impelling means having an inlet connected to said sump and an outlet connected to said dishwashing chamber for effecting a water circulation in said chamber, air-tight tank means in communication with said dish washing chamber for collecting water, valve means actuatable for selectively connecting said air-tight tank means to said dishwashing chamber for flushing said dishes, and means for selectively supplying water to said air-tight tank means for a predetermined period to pressurize said air-tight tank means before said valve means is actuated.

6. The combination of claim 5 including means for connecting said dishwashing chamber to a drain while said valve means is actuated.

7. In combination, casing means forming a dishwashing chamber having a sump, water impelling means having an inlet connected to said sump and an outlet connected to said dishwashing chamber for effecting a water circulation in said chamber, a spray nozzle in said chamber, air-tight means in communication with said spray nozzle for collecting water, valve means actuatable for selectively connecting said air-tight collecting means to said spray nozzle for pressure flushing said dishes, a domestic water supply means, and means having an inlet in air gap spaced water receiving relationship to said water supply means for selectively supplying water to said air-tight collecting means to pressurize said air-tight collecting means before said valve means is actuated.

8. In combination, casing means forming a dishwashing chamber having a sump, reversible water impelling means having an inlet connected to said sump and an outlet means selectively connected to a drain for eliminating waste from said chamber when said pump is operated in one direction or to said dishwashing chamber for effecting a water circulation in said chamber when said pump is operated in another direction, air-tight means in communication with said dishwashing chamber for collecting water, valve means actuatable for selectively connecting said air-tight collecting means to said dishwashing chamber for pressure flushing said dishes, means for selectively supplying water for a predetermined period to said air-tight collecting means to pressurize said air-tight collecting means, and means operable after said predetermined period for substantially simultaneously actuating said valve means to connect said air-tight collecting means to said chamber and said impelling means for operation in said one direction.

9. In combination with a dishwashing chamber, a closed air-tight storage tank, means for pressurizing said tank including a water fill valve for metering water into said

storage tank, a water control valve for selectively connecting said storage tank to said dishwashing chamber, and control means for opening said water control valve a predetermined interval after opening said water fill valve to pressure flush the surfaces of the dishes.

References Cited in the file of this patent

UNITED STATES PATENTS

821,250	Miller	May 22, 1906
2,066,232	Schmidt	Dec. 29, 1936
2,599,110	Johnson	June 3, 1952
2,618,281	Ornas	Nov. 28, 1952
2,621,666	Ornas	Dec. 16, 1952
2,621,673	Hodgens	Dec. 16, 1952
2,686,526	Frantz	Aug. 17, 1954
2,721,566	Brucker	Oct. 25, 1955
2,729,219	Smith	Jan. 3, 1956
2,939,465	Kesling	June 7, 1960
2,963,029	Bock	Dec. 6, 1960