Jan. 27, 1925. 1,524,514

O. H. FRANK

CONNECTING BOX

Filed Aug. 16, 1923 2 Sheets-Sheet 1

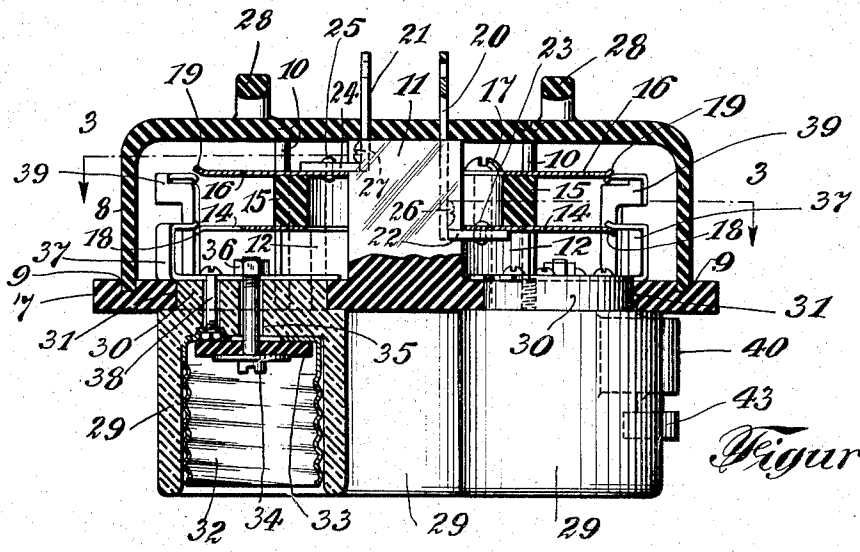

Figure 1.

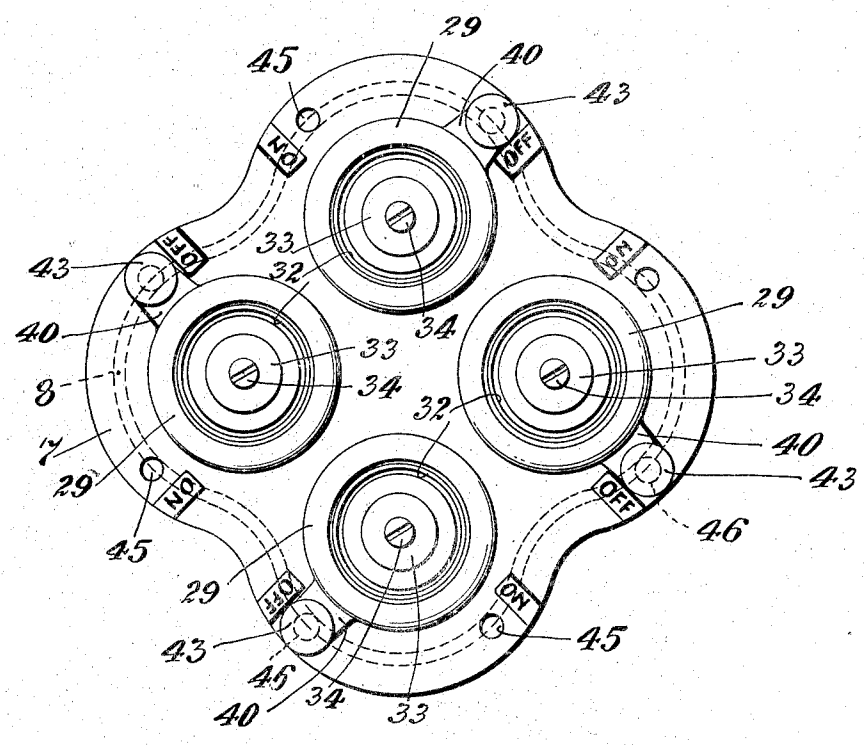

Figure 2.

INVENTOR
Otto H. Frank
BY
Walton Harrison
his ATTORNEY.

Jan. 27, 1925. 1,524,514

O. H. FRANK

CONNECTING BOX

Filed Aug. 16, 1923 2 Sheets-Sheet 2

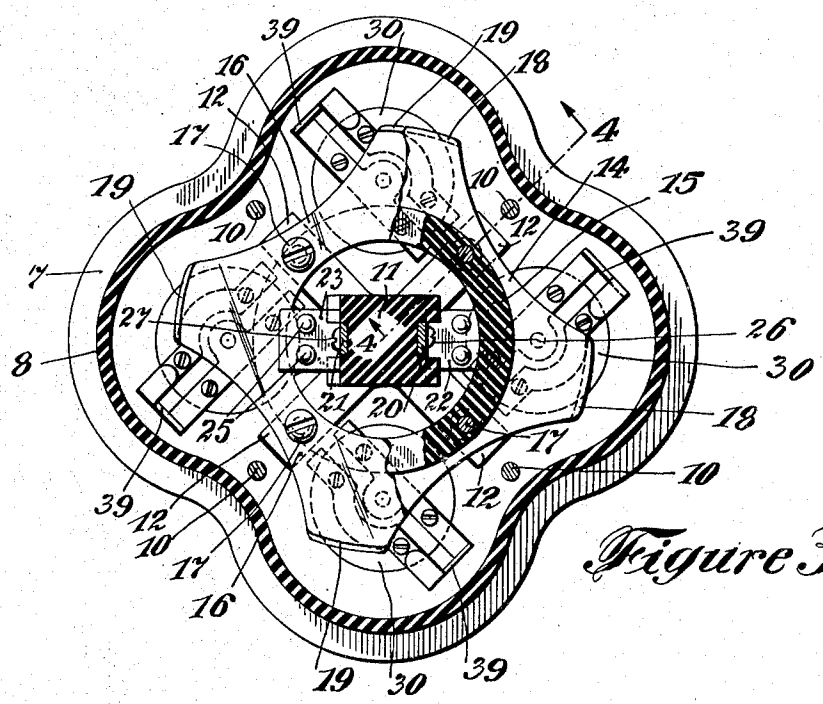

Figure 3.

Figure 5.

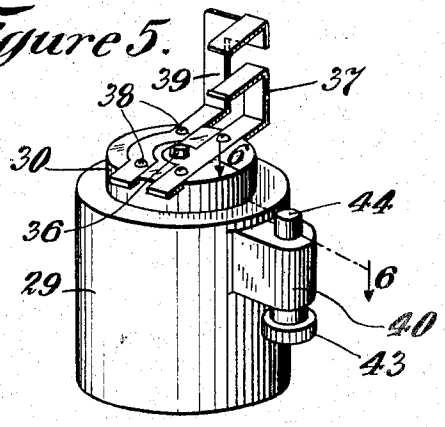

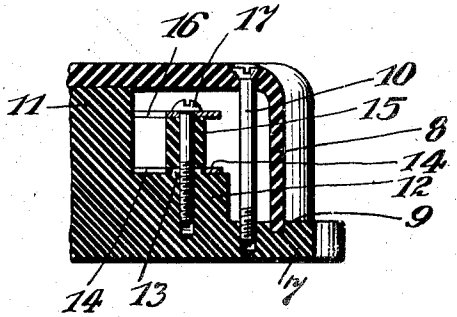

Figure 4.

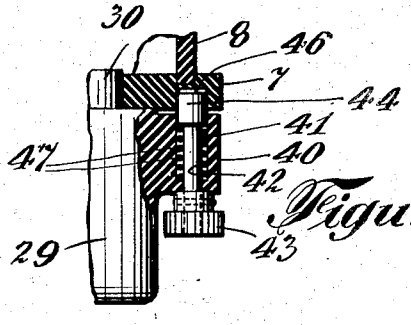

Figure 6.

INVENTOR
Otto H. Frank
BY
Walton Harrison,
his ATTORNEY.

Patented Jan. 27, 1925. 1,524,514

UNITED STATES PATENT OFFICE.

OTTO H. FRANK, OF BROOKLYN, NEW YORK.

CONNECTING BOX.

Application filed August 16, 1923. Serial No. 657,765.

To all whom it may concern:

Be it known that I, OTTO H. FRANK, a citizen of the United States, and resident of Brooklyn, in the county of Kings and State of New York, have invented certain new and useful Improvements in Connecting Boxes, of which the following is a full, clear, and concise description.

My invention relates to electrical connecting boxes of a type suitable for use in the household, store, office and factory, for the purpose of connecting incandescent lamps, or electric fans, electric soldering devices or the like to be arranged in groups, so that the group as a unit can be readily detached from its connections, and so that any one or more of the lamps, fans or the like can be readily connected or disconnected independently of the others.

More particularly stated, I seek to produce a connecting box containing several pairs of conductors and so arranged that the box as a whole may be connected with a source of electric current in substantially the same manner as a plug connection is made, the connecting box being provided with a number of separate sockets each adapted to carry an incandescent lamp or a plug for controlling such a lamp, each socket being revoluble by hand for the purpose of controlling its electrical connections.

Reference is made to the accompanying drawing forming a part of this specification, and in which like reference characters indicate like parts throughout all of the figures.

Figure 1 is a substantially central section through a connecting box made is accordance with my invention.

Figure 2 is an elevation of the same.

Figure 3 is a section on the line 3—3 of Figure 1, looking in the direction indicated by the arrows.

Figure 4 is a section on the line 4—4 of Figure 3, looking in the direction indicated by the arrows.

Figure 5 is a perspective of one of the sockets.

Figure 6 is a section on the line 6—6 of Figure 5, looking in the direction indicated by the arrows, and showing the means for securing the socket in one of its two normal positions.

A base 7 is made of insulating material, and has the general form indicated in Figure 2.

Mounted upon the base 7 is a casing 8, of substantially bell-shape. The base 7 is provided with a groove 9, into which is detachably fitted the adjacent edge of the casing, as may be understood from Figures 1 and 2.

Bolts 10, each of the form indicated in Figure 4, extend through the casing 8 and engage the base 7, so as to hold the casing and base in proper relative position, as may be understood from Figures 3 and 4.

The base 7 is provided with a boss 11, made of insulating material, and integral with it, as indicated in Figures 3 and 4.

The base 7 is further provided with a number of foot ledges 12, made of insulating material and integral with the base 7 and boss 11, as shown in Figure 3.

Each foot ledge is provided with a slightly protruding portion 13 of annular form and constituting a bead, as may be understood from Figure 4. A contact ring 14 rests upon all of the foot ledges 12, and encircles the boss 11. The contact ring 14 is held securely in position by aid of the beads 13 which extend through holes in it, as indicated in Figure 4.

Engaging the contact ring 14 is a spacing ring 15, made of insulating material, and engaging the spacing ring 15 is another contact ring 16, made of metal.

The spacing ring 15 is thus sandwiched in between the contact rings 14 and 16, and the parts thus arranged are secured firmly in position by bolts 17, in this instance four in number.

Each bolt 17 extends through a hole in the contact ring 16, a hole in the spacing ring 15 of insulating material and through the annular bead 13, which occupies a hole in the contact ring 14, as indicated in Figure 4. Each bolt 17 engages directly the adjacent foot ledge 12, and is threaded for that purpose, as may be understood from Figure 4.

The contact ring 14 is provided with a number of projecting contact portions 18, each having the form of a lip, and the contact ring 16 is similarly provided with a number of extending contact portions 19, each having the form of a lip. Each lip 19 is disposed adjacent a lip 18, the lips being thus arranged in pairs, as indicated more particularly in Figure 3.

The boss 11 carries a pair of metallic contact tongues 20 and 21. The contact

tongue 20 is provided with a foot 22 integral with it, and to which is secured the contact ring 14 as may be understood in Figure 1, by means of a rivet 23. The contact 21 is similarly provided with a foot 24, integral with it, and secured by means of a rivet 25 to the contact ring 16.

The contact tongue 20 is secured to the boss 11 by screws 26, the contact tongue 21 being similarly secured to the boss by screws 27.

In order to avoid weakening the substance of the boss 11 the screws 26, 27 are located in different planes as may be understood from Figure 1.

The tongue 20 is in metallic communication with all of the lips 18, and the tongue 21 is in metallic communication with all of the lips 19.

The tongues 20 and 21 extend through holes in the casing 8, and are adapted to be thrust into a wall box or into a socket or appropriate form, not shown, in order to supply current through the tongues 20 and 21 to the contact rings 14 and 16 above described.

The casing 8 is provided with a pair of eyes 28, integral with it. These eyes are for the purpose of serving as anchorages, to be engaged by hooks and other appropriate fastenings in order to assist the tongues 20 and 21 hold the casing in position.

The base 7 carries a number of sockets 29, each having the form shown in Figure 5. Each socket 29 is made of insulating material, such as hard rubber, fiber or porcelain, and has the form of a cup, as indicated more particularly in Figures 1 and 2. Each socket 29 is provided with a neck portion 30, and this neck portion extends neatly but loosely through an opening 31 in the base 7. Each socket 29 carries a metallic sleeve 32, fashioned like a cup, as indicated in Figure 1, and having a threaded formation. Fitted into the metallic sleeve 32 is a washer 33 of insulating material. A bolt 34 extends through the washer 33 through a hole 35 in the socket, and through a contact spring 37. Other bolts 38 extend through a contact spring 39. Thus the sleeve 32 is by means of the bolt 38 in metallic communication with the contact spring 39; and the bolt 34, though in contact with the contact spring 37, is insulated from the sleeve 32. Hence the bolt 34 and the sleeve 32 are respectively adapted for use as the inner and outer contact members of the socket, and are energized respectively by means of the contact springs 37 and 39.

Each socket 29 is adapted to be grasped by hand, and rocked back and forth to a limited extent. For this purpose the neck 30 simply turns within the opening 31. As the socket is thus rocked it of course carries with it the contact springs 37 and 39, so that these contact springs are brought into or out of engagement with the lips 18 and 19.

Each socket 29 is provided with a protuberance 40 having a cylindrical passage 41, and extending through this passage is a bolt 42, provided with a head 43. The bolt 42 is further provided with an extending portion 44, and with a retractile spring 47.

The base 7 is provided with holes 45 and 46, so placed that the rocking of the socket 29 may bring the bolt 44 into and out of registry with these holes. The base 7 is further provided with legends On and Off, disposed adjacent the holes 45 and 46, as may be understood from Figure 2.

Each socket has two normal positions, indicated by the legends On and Off just mentioned. When the socket is in the position indicated by the legend Off, the extending portion 44 of the bolt 42 occupies the hole 46; but when the socket is rocked into the position indicated at On the extending portion of the bolt occupies the hole 45.

When the socket occupies the position indicated by the legend Off, the contact members 37 and 39 are out of engagement with the adjacent contact lips 18 and 19; and when the socket is in the position indicated by the legend On, the contact members 37 and 39 are in engagement with the lips 18 and 19.

The sockets 29 may be used in a variety of different ways. If an incandescent lamp is used in each socket, these lamps will be thus arranged in a group. The operator by rocking one or more of the sockets as above described, may light one or more of the lamps; so that one, two, three or four of the lamps may be brought into active use. In the same manner, by rocking the sockets in opposite direction the lamps can be successively thrown out of active use.

If it be desired to use my device as a branch connector, one or more plugs for this purpose are inserted into an equal number of the sockets 29.

The connector as a unit may be disconnected by simply withdrawing the tongues 20 and 21 from the connection whereby they are supplied with the electric current.

I do not limit myself to the particular mechanism shown, as variations may be made therein without departing from my invention, the scope of which is commensurate with my claims.

I claim:

1. A device of the character described, comprising a base made of insulating material and provided with a centrally disposed boss, said base being further provided with a plurality of foot ledges extending radially outward from said boss, a contact ring engaging said foot ledges and encircling said boss, a spacing ring of insulat-

ing material engaging said contact ring, a second contact ring mounted upon said spacing ring of insulating material, electrical connections for supplying current to said contact rings, a plurality of revoluble sockets carried by said base and revoluble relatively to the same, and contact members mounted upon said socket and revoluble therewith for the purpose of engaging and disengaging said contact rings.

2. A device of the character described, comprising a base provided with openings, a plurality of revoluble sockets provided with neck portions extending into said openings and revoluble therein independently of each other, said sockets being thus journaled upon said base, contact members carried by each of said sockets, and other contact members mounted upon said base and insulated from each other, said last mentioned contact members being located partially within the path of travel of said first mentioned contact members when said sockets are turned.

3. A device of the character described, comprising a base provided with openings, a number of separate sockets provided respectively with neck portions extending into said openings, so that said sockets are thus journaled separately upon said base and revoluble by hand independently of each other, and contact mechanism mounted upon said base and connected with each of said sockets, said contact mechanism being controllable by movement of said sockets relatively to said base.

4. A device of the character described, comprising a base made of insulating material and provided with openings, a plurality of revoluble sockets equal to the number of said openings, each socket having a neck portion extending into some one of said openings, a boss mounted upon said base and extending therefrom, a plurality of contact rings encircling said boss and insulated from each other, each of said contact rings being provided with contact lips, and a pair of contact members mounted upon each of said sockets and revoluble therewith for the purpose of bringing said contact members into and out of engagement with a pair of said contact lips.

5. A device of the character described, comprising a base, a plurality of sockets mounted separately upon said base and free to rock relatively thereto independently of each other, each of said sockets having two definite normal positions of rest, means controllable by the operator at will for locking the socket in either of said two positions, and contact mechanism mounted upon said base and connected with each of said sockets, said contact mechanism being controllable by each socket independently of the other for the purpose of opening and closing an electric circuit.

6. A device of the character described, comprising a base, a boss made of insulating material and extending from said base, a pair of contact members mounted upon said boss and extending therefrom, a pair of contact rings disposed adjacent said boss and insulated from each other, said contact rings being connected with said contact members, a socket revolubly mounted upon said base, and contact mechanism carried by said socket and therewith movable relatively to said base, for the purpose of engaging and disengaging said contact rings.

Signed at New York, in the county of New York and State of New York, this 14th day of August, 1923.

OTTO H. FRANK.