Feb. 15, 1944. O. LARSEN 2,341,514

BOX CONTAINER

Filed May 8, 1941

Fig. 1

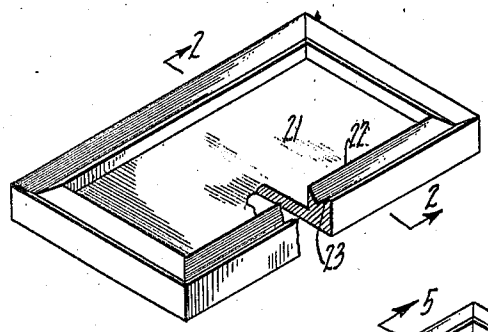

Fig. 2

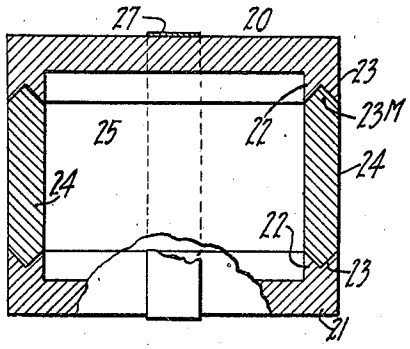

Fig. 3

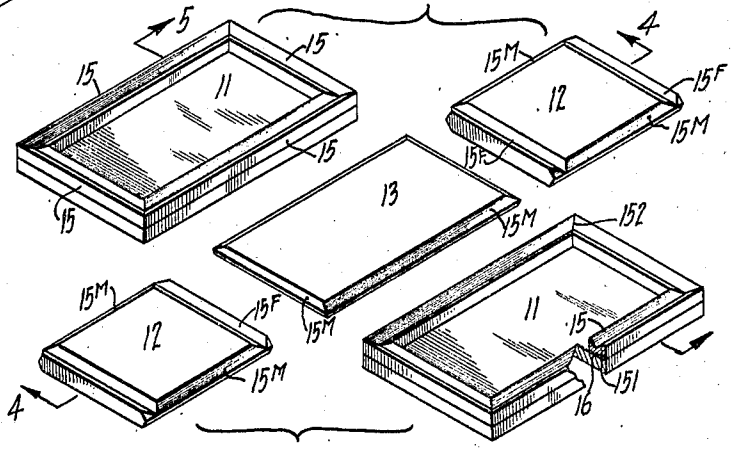

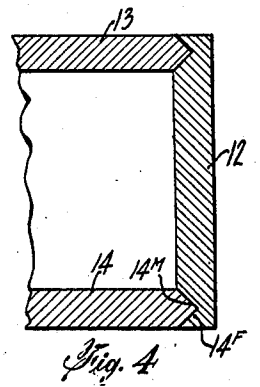

Fig. 4

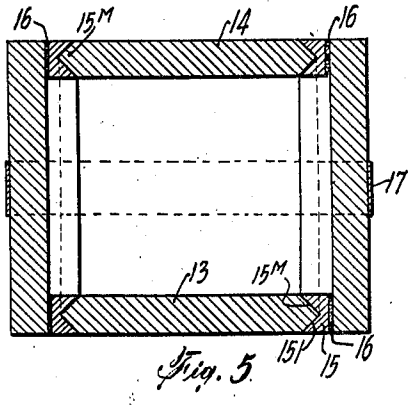

Fig. 5

INVENTOR.
OLE LARSEN

BY

M. P. Parish
ATTORNEY.

Patented Feb. 15, 1944

2,341,514

UNITED STATES PATENT OFFICE

2,341,514

BOX CONTAINER

Ole Larsen, New York, N. Y.

Application May 8, 1941, Serial No. 392,433

7 Claims. (Cl. 217—12)

This invention relates to improvements in boxes or containers usually known as knock-down type.

An object is to provide a box having upper, lower, side and end walls constructed and arranged for novel interlocking engagement and adapted to be readily assembled without the use of nails or similar fastening means and which may be locked together by a single strap means longitudinally around the container.

Another object is to provide a container having interlocking portions that may be provided thru use of a preformed molding strip, having male or female groove therein, which strip is preferably glued or otherwise attached to cooperative ends of certain adjacent box parts.

Still another object is to provide a box having preferably molded or stamped, similar top and bottom members having integral peripheral riser or offset portion in which is provided integral peripheral male or female groove to cooperate with cooperating groove portions in the adjacent side members so as to interlock the members.

These and other objects and advantages will be more readily understood from the following description and drawing forming part thereof and in which

Fig. 1 is a perspective view of a bottom member having integral peripheral riser portion having a (peripheral) groove therein.

Fig. 2 is a cross section thru a box having the bottom and (similar top) of Fig. 1 taken on line 2—2 of Fig. 1.

Fig. 3 is a perspective view of the bottom and side members of a preferred container having attached molding strip along the ends of certain parts.

Fig. 4 is a fragmentary cross section thru the box of Fig. 3 (when set up) having similar respective sides and ends taken on line 4—4 of Fig. 3.

Fig. 5 is a cross section thru the box of Fig. 3 (when set up) taken on line 5—5 of Fig. 3.

In Figs. 3, 4 and 5 is shown a container 10, having sides 11, ends 12, bottom 13 and symmetrical cover 14, each formed from a piece of flat rigid stock, the sides 11 having along the periphery as shown a suitable molding riser or offset strip 15 fastened thereto by suitable fastening means such as glue or nails 16 and having a female groove 151 therein. A suitable interlocking bead and groove joint may be provided preferably as shown to seal the joins of the neighboring parts when set of. The depth of the joint may equal ½ the thickness of the material used. I prefer to use V-shaped or wedge type joint because of its greater relative strength, simple formation and economical manufacture. When manufacture of the female groove along the entire periphery of a part is necessary I have found it practical and simple to use attachable moulding strip 15 having preformed groove 151 to provide simple mitre formation at the corners 152, instead of the intersecting cut formation resulting when the groove is integrally formed. The cooperating male edge 15M, is however practical to form integral with a member peripherally therewith as in 13 and 14, or otherwise. It is seen that the male edge 15M may cooperatively join with either an integrally formed female groove 15F or a moulding strip female groove 151 when the parts are set up as in Figs. 3–5. A single strap 17 tightly around the container may alone hold the parts when placed together.

To assemble such a six walled container with a single strap it is usual that the strap 17, Fig. 5, is removably tightened horizontally around the outsides securing the bottom and sides and thereafter the top is permitted to seat itself in the upper side wall cooperative female groove by slightly loosening the strap permitting disengagement of the parts to provide sufficient clearance for member 14 to so seat itself. The strap is then tightened.

In Figs. 1 and 2 a container is shown having similar top and bottom 20 and 21, reshpectively, each having an integral riser portion 22 having integral female groove 23 to cooperate with integral male edge 23M of sides 24 and ends 25. Said riser and integral groove may be formed by stamping operation in metallic parts or by stamping, casting or moulding members of fibrous materials.

A container as in Figs. 1 and 2 is preferably held set up by a single strap means 27 placed thereabout as shown in Fig. 2. While I have shown member 24 as a side it is understood it may be a top or bottom when the box is turned vertically thru 90 degrees from the position shown in Fig. 2.

The adaptable knock-down and other features of my container and its possible reuse appear obvious.

I claim:

1. In a container, the combination of top, bottom and side walls which may be secured together by only a single strap means wrapped horizontally around the body of the container, comprising adjacent pieces having edge joints, each joint being formed of a wedge V-shaped male portion and corresponding groove, said top

and bottom members being symmetrical and having a uniform peripheral edge to cooperate with corresponding portions on the sides of the container, the male portion being triangular in cross section and having side intersecting straight walls of equal length and a base equal in length to the thickness of the piece on which it is formed, said male wedge side walls being coextensive with the side surfaces of its respective piece, whereby the wedge shaped portions are cooperatively interlocked when the parts are assembled to form a container and the peripheral V-shaped edge of the top and bottom members is concealed, said sides being moveable simultaneously laterally similarly towards said top and bottom members when the strap is tightened to facilitate said cooperative interlock of the wedge shaped portions.

2. In a container, the combination of top, bottom and side walls which may be secured together by only a single strap means wrapped horizontally around the body of the container, comprising adjacent pieces having edge joints, each joint being formed of a wedge V-shaped male portion and corresponding groove, said top and bottom members being symmetrical and having a peripheral offset riser portion having a V-shaped groove therein to cooperate with corresponding portions on the sides of the container, the male portion being triangular in cross section and having side intersecting straight walls of equal length and a base equal in length to the thickness of the piece on which it is formed, said male wedge side walls being coextensive with the side surfaces of its respective piece, whereby the wedge shaped portions are cooperatively interlocked when the parts are assembled to form a container and the peripheral V-shaped edge of the top and bottom members is concealed, said sides being moveable simultaneously laterally similarly towards said top and bottom members when the strap is tightened to facilitate said cooperative interlock of the wedge shaped portions.

3. The device of claim 2 characterized by the fact that the angle at the apex and between the intersecting wedge sides is of ninety degrees.

4. The device of claim 2 in which said riser offset portion is integral with the top and bottom members and angularly offset therefrom at right angles therewith.

5. In a container, the combination of top, bottom and side walls which may be secured together by only a single strap means wrapped horizontally around the body of the container, comprising adjacent pieces having edge joints, each joint being formed of a wedge V-shaped male portion and corresponding groove, said top and bottom members being symmetrical and having a peripheral offset riser portion having a V-shaped groove therein to cooperate with corresponding portions on the sides of the container, said offset comprising a preformed moulding strip, means fastening said strip to said top and bottom members, said male portion being triangular in cross section and having side intersecting straight walls of equal length and a base equal in length to the thickness of the piece on which it is formed, said male wedge side walls being coextensive with the side surfaces of its respective piece, whereby the wedge shaped portions are cooperatively interlocked when the parts are assembled to form a container and the peripheral V-shaped edge of the top and bottom members is concealed, said sides being moveable simultaneously laterally similarly towards said top and bottom members when the strap is tightened to facilitate said cooperative interlock of the wedge shaped portions.

6. In a container, the combination of top, bottom and side walls which may be secured together by only a single strap means wrapped horizontally around the body of the container, comprising adjacent pieces having edge joints, said top and bottom members being symmetrical and having a uniform peripheral edge to cooperate with corresponding portions on the sides of the container, the male portion being triangular in cross section and having side intersecting straight walls of equal length and a base equal in length to the thickness of the piece on which it is formed, said male wedge side walls being coextensive with the side surfaces of its respective piece, integral means in said joint-forming-portions for tightly fitting the joints, said means comprising V-shaped wedge formations for uniform interlock upon movement of the parts towards each other to tighten the joints, said single strap means for moving the parts together to make up and hold the joints.

7. In a container, the combination of top, bottom and side walls which may be secured together by only a single strap means wrapped horizontally around the body of the container, comprising adjacent pieces having edge joints, said top and bottom members being symmetrical and having a uniform peripheral edge to cooperate with corresponding portions on the sides of the container, the male portion being triangular in cross section and having side intersecting straight walls of equal length and a base equal in length to the thickness of the piece on which it is formed, said male wedge side walls being coextensive with the side surfaces of its respective piece, integral means in said joint-forming-portions for tightly fitting the joints, said means comprising V-shaped male wedge formations cooperative with corresponding V-shaped female slots for automatic cooperative interlock upon movement of the parts toward each other to tighten the joints, said V shaped male wedge being at least as large as said V-slot in cross section to fill the slot when the joints are made up, said single strap means for moving the parts together to make up and hold the formed joints.

OLE LARSEN.