PCT WORLD INTELLECTUAL PROPERTY ORGANIZATION
International Bureau

INTERNATIONAL APPLICATION PUBLISHED UNDER THE PATENT COOPERATION TREATY (PCT)

(51) International Patent Classification 6 : B23H 9/10, 9/14	A1	(11) International Publication Number: WO 95/17277
		(43) International Publication Date: 29 June 1995 (29.06.95)

(21) International Application Number: PCT/US94/14268

(22) International Filing Date: 7 December 1994 (07.12.94)

(30) Priority Data:
171,293 21 December 1993 (21.12.93) US

(71) Applicant: UNITED TECHNOLOGIES CORPORATION [US/US]; United Technologies Building, Hartford, CT 06101 (US).

(72) Inventors: BANKS, John, Hugh; 125 Niles Road, Amston, CT 06231 (US). POGGIO, Roger, A.; 550 East Main Street, Meriden, CT 06450 (US).

(74) Agent: WILKES, Christine, M.; United Technologies Corporation, Pratt & Whitney, 400 Main Street, East Hartford, CT 06108 (US).

(81) Designated States: JP, European patent (AT, BE, CH, DE, DK, ES, FR, GB, GR, IE, IT, LU, MC, NL, PT, SE).

Published
With international search report.

(54) Title: DEVICE FOR PRODUCING SHAPED HOLES IN ARTICLES SUCH AS GAS TURBINE ENGINE COMPONENTS

(57) Abstract

A multiple piece electrode for use with an electrical discharge machining device (EDM) includes at least one tooth. The electrode also includes a movable, elongated rod positioned inside each tooth. The movable rod may be secured to the tooth by several means such as a clamp mechanism, an epoxy, or by a securing mechanism attached to the processing equipment. When the electrode is advanced longitudinally into the workpiece, the rod forms a deep, small diameter hole and the tooth forms an enlarged opening at one end of the hole. The rod may be rotated to enhance hole depth capabilities. Additionally, the rod may be hollow, thus allowing a dielectric fluid to pass through the rod.

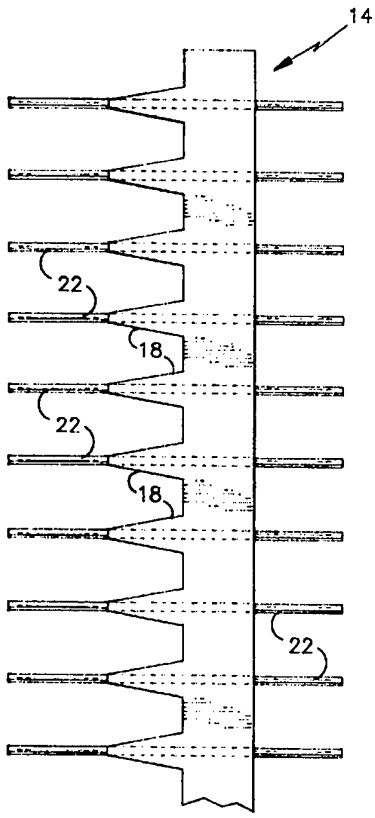

FOR THE PURPOSES OF INFORMATION ONLY

Codes used to identify States party to the PCT on the front pages of pamphlets publishing international applications under the PCT.

AT	Austria	**GB**	United Kingdom	**MR**	Mauritania
AU	Australia	**GE**	Georgia	**MW**	Malawi
BB	Barbados	**GN**	Guinea	**NE**	Niger
BE	Belgium	**GR**	Greece	**NL**	Netherlands
BF	Burkina Faso	**HU**	Hungary	**NO**	Norway
BG	Bulgaria	**IE**	Ireland	**NZ**	New Zealand
BJ	Benin	**IT**	Italy	**PL**	Poland
BR	Brazil	**JP**	Japan	**PT**	Portugal
BY	Belarus	**KE**	Kenya	**RO**	Romania
CA	Canada	**KG**	Kyrgystan	**RU**	Russian Federation
CF	Central African Republic	**KP**	Democratic People's Republic of Korea	**SD**	Sudan
CG	Congo			**SE**	Sweden
CH	Switzerland	**KR**	Republic of Korea	**SI**	Slovenia
CI	Côte d'Ivoire	**KZ**	Kazakhstan	**SK**	Slovakia
CM	Cameroon	**LI**	Liechtenstein	**SN**	Senegal
CN	China	**LK**	Sri Lanka	**TD**	Chad
CS	Czechoslovakia	**LU**	Luxembourg	**TG**	Togo
CZ	Czech Republic	**LV**	Latvia	**TJ**	Tajikistan
DE	Germany	**MC**	Monaco	**TT**	Trinidad and Tobago
DK	Denmark	**MD**	Republic of Moldova	**UA**	Ukraine
ES	Spain	**MG**	Madagascar	**US**	United States of America
FI	Finland	**ML**	Mali	**UZ**	Uzbekistan
FR	France	**MN**	Mongolia	**VN**	Viet Nam
GA	Gabon				

Description

DEVICE FOR PRODUCING SHAPED HOLES IN ARTICLES SUCH AS GAS TURBINE ENGINE COMPONENTS

Technical Field

The present invention relates generally to the production of shaped holes in articles, such as gas turbine engine components, and more particularly to an electrode for use in an electrical discharge machining (EDM) device.

Background Art

Gas turbine engines operate at extremely high temperatures for increased efficiency. Stationary vanes, disposed between rings of moving blades within the turbine section of the engine direct and stabilize high temperature gas flow from one stage of moving blades to the next. Direct exposure to this high temperature gas, however, detrimentally affects the vanes and blades by causing component distortion and even melting in extreme cases.

Internal cooling techniques have been developed to keep the temperature of the blades and vanes within design limits while operating at high temperatures. For example, the outer surface of engine components are typically cooled with high pressure cooling air from the compressor section of the engine. Film cooling has proven to be an effective means of utilizing this cooling air. In this method, a layer of cool air is flowed between the high temperature gases and the external surfaces of the engine components. The layer of cooling air is formed by passing the cooling

air through a series of small holes in the component which are formed in a predetermined pattern. The resulting film of air reduces component surface temperature thereby deterring component distortion. Engine efficiency is also increased because higher turbine inlet temperature ranges are possible.

It is well known in the art that film cooling effectiveness can be increased by using diffusion holes which have a conical portion and an enlarged opening at the surface of the component, as shown in Fig. 1. The shaping of the holes to diffuse air before it enters the boundary layer of the component broadens the spread of air downstream of the hole and thus, increases cooling effectiveness. In comparison, cylindrical shaped holes create a localized region downstream of the hole where cooling effectiveness is great and there is little spreading effect away from this region. Although high quality diffusion holes provide superior performance, they are both costly and difficult to form.

In the prior art, many attempts have been made to form cost effective, high quality cooling holes in gas turbine engine components. For example, laser drilling has been used to produce holes on the leading and trailing edges of vanes and blades. It is difficult, however, to produce shaped holes with this technique. This is a significant limitation because the geometry of the holes partially determines the effectiveness of cooling.

Electrochemical machining (ECM) is another option for producing diffusion holes. This process, however, requires high setup and tooling costs and has high capital equipment costs. In addition, the electrolyte in this process, typically an oxidant such as sodium nitrate or sodium chlorate, is a health and safety hazard and the process by-products are often classified as hazardous waste.

Another method, electrical discharge machining (EDM), can also be used to form shaped diffusion holes in engine components. EDM is a well known process for producing holes or other openings in metals. It uses current discharges to erode metal. For example, by pulsing a direct current between a positively charged work piece (anode) and an electrode (cathode), a spark discharge may be produced. The current occurs when the potential difference between the electrode and the work piece, which both contact a dielectric fluid, is great enough to breakdown the dielectric fluid and produce an electrically conductive channel. Upon application of a voltage, a current flow results with enough heat energy to melt and erode the work piece. This process has application in the machining of small, deep, odd-shaped holes which are cumbersome, if not impossible, to produce by other means.

An EDM method for producing diffusion holes in engine components uses a copper electrode which is manufactured in a three-dimensional shape by stamping and coining. The prior art one-piece electrode consists of at least one small diameter elongated end which produces the cooling air

metering section. The elongated end is connected to a three-dimensional diffuser shaped portion which produces a diffuser area for the metering section. The electrode produces a similar shaped hole, with allowance for electrode overburn and EDM electrode erosion.

Although the above EDM method is successful, limitations exist. For example, copper electrodes have a significant length/depth limit and a significant lower diameter limit for the holes due to the low melting point of copper. The hole depth limit for the above described copper electrode is about 0.250 inches (.635cm) maximum at a minimum diameter limit of about 0.014 inches (.036cm). These values are design norms based on production experience for a shaped copper electrode.

Accordingly, what is needed is an EDM electrode which can produce high quality, deeper shaped holes with smaller metering diameters than previously possible.

Disclosure of the Invention

According to the present invention, a multiple piece electrode for use in an electrical discharge machining (EDM) device for producing diffusion holes in superalloys is disclosed. The electrode of the present invention comprises at least one three-dimensional shaped tooth to facilitate formation of a diffusion hole, and at least one movable rod portion which passes through the tooth. The shaped tooth may be made from a malleable conductive material such as copper or copper alloys. The shaped tooth

may also be made from graphite, copper-tungsten, tungsten, gold, silver, tin, platinum, lead, zinc, iron, nickel, or brass. Preferably, the shaped tooth is copper. Any conventional means of making the shaped tooth, such as stamping and coining may be employed. The shaped tooth includes a hole therein for the rod.

The movable rod may be any material with a conductivity as high as that of tungsten and a melting point about as high as that of brass or higher. For example, the rod may be tungsten, copper-tungsten or brass. The rod may have a diameter between about 0.005 (.013cm) inches and about 0.030 inches (.076cm). The rod may be a cylindrical solid structure or hollow structure. If the rod is hollow, a dielectric fluid may be passed through the rod to enhance formation of a deep hole by providing a constant flow of dielectric fluid through the hole.

The movable rod may be positioned in a passageway inside the shaped tooth. In this embodiment, the rod and shaped tooth may be held together by a mechanism such as an external clamping mechanism, or a securing mechanism attached to the processing equipment. An adhesive, such as epoxy, may also be used. Alternatively, the shaped tooth may be multiple pieced, wherein a clamping mechanism, such as a plurality of screws, may fasten the rod and tooth together. When the multiple piece electrode is advanced into the work piece, the rod causes an erosion which results in a deep, small diameter hole in the work piece and the shaped tooth causes an erosion which results in an

enlarged opening at one end of the hole. Additionally, upon advancing the shaped tooth and rod into the work piece, the rod may be rotated during the EDM process if the rod and shaped tooth are held together by an appropriate mechanism. Any conventional means of rotating the rod, such as a rotating adapter attached to the processing equipment, may be used. The combination of a hollow rod with internal dielectric fluid flow and a rotating adapter may further increase the achievable hole depth by causing dielectric flow.

Alternatively, the work piece may be electrically discharged machined first with a shaped tooth and then with a rod. An advantage of this sequence is the reduction of wear on the rod. The rod only erodes the work piece beyond the diffused hole previously formed by the shaped tooth. This sequence increases electrode alignment and essentially eliminates tool marks around the metering hole. Tool marks are usually created by misaligned metering sections caused by handling damage or thermally induced bending.

The present invention may also include a refeed system for the rods which positions the rods to a desired length. The refeed system includes an electrode length master which is positioned in front of an electrode. The refeed system slides the electrode to a desired length against the length master. The length master is removed and the EDM cycle then continues. In this application, the rods are positioned to a proper length and subsequently refed to compensate for electrode wear. Any conventional mechanism

for advancing and extracting the rods in an EDM device may be used. Upon electrical discharge machining a diffused area with a tooth, a small diameter metering area may then be produced by advancing the rods into the work piece. This system allows for improved position tolerance and compensation for uneven electrode EDM wear.

Brief Description of the Drawings

Fig. 1 is a schematic view of a diffused hole.

Fig. 2 is a perspective view of a turbine blade.

Fig. 3 is a side view of a "comb-like" structure of a multiple piece electrode of the present invention.

Fig. 4 is a perspective view of a "comb-like" structure of a multiple piece electrode of the present invention.

Fig. 5 is a schematic view of a diffused hole with an angle of about ten (10) degrees.

Best Mode for Carrying Out the Invention

By way of illustration which is meant to be exemplary rather than limiting, the present invention will be described by the electrical discharge machining (EDM) of diffusion holes in a hollow turbine blade. In as much as it is well known in the art to form the diffusion holes in gas turbine engine components by means of EDM, details of the process will not be described herein. Specific details can be found in U.S. Patent No. 4,197,443 (Sidenstick) and

in U.S. Patent No. 3,604,884 (Olsson) which are incorporated herein by reference.

Fig. 2 shows a typical hollow turbine blade 2 (work piece) with diffusion holes 4 at the blade's convex surface 6. The blade 2 includes a root 8, wherein cooling air enters the internal cavity of the blade 2 through an opening in the root 8. This air cools the internal surface of the blade 2 by convection and cools the outer surface of the blade 2 by film cooling. To permit film cooling, a plurality of diffusion holes 4 are placed on the convex surface 6 of the blade 2.

As shown in Fig. 3 and Fig. 4, the multiple piece electrode 14 comprises a plurality of three-dimensional shaped teeth 18 which form a "comb like" structure. Although a single tooth may be used, a plurality of teeth 18 will usually be more cost effective. The teeth 18 are made out of copper since it is relatively inexpensive and easy to stamp and coin into a desired shape.

A plurality of rods 22, are positioned inside the teeth 18, one for each tooth. As shown in Fig. 5, it is desirable to produce a diffusion hole with an angle of about ten (10) degrees because diffusion hole angles significantly greater than that may result in undesirable turbulent airflow. The rods 22 have a diameter between about 0.006 inches (.015cm) and 0.010 inches (.025cm) because small diameter metering areas are desired for efficient cooling. The rods 22 are made of tungsten because tungsten exhibits better wear properties than

copper during the EDM process. The rods 22 and teeth 18 are secured together by a mechanism attached to the processing equipment, such as a clamping mechanism 24 shown in Fig. 4. Additionally, the present invention includes a refeed system for the rods 22 which positions the rods 22 to a desired length. When the electrode 14 is longitudinally advanced into the blade 2, the rods 22 cause a deep, small diameter holes 4 in the blade 2 and the teeth 18 cause conical areas at one end of the holes 4. The teeth 18 are placed in close proximity to the blade 2 to form a gap across which an electric current may be transmitted to erode a portion of the blade 2.

The present invention offers several advantages over existing technology. For example, the rods 22 may be made from a material other than that used for the teeth 18. As a result, cost effective, deeper holes with a metering section diameter of about 0.010 inches (.025cm) are possible at a depth in excess of about 0.250 inches (.635cm). This is a significant improvement over the prior art which has a metering section diameter limit of about 0.014 inches (.036cm) with a 0.250 inch (.635cm) depth limit using the above described copper electrode.

While the principles and procedures are described herein for use on a turbine blade 2, it will be obvious to those skilled in the art that the same principles and procedures could be applied to other surfaces of additional articles requiring diffusion holes.

Although this invention has been shown and described with respect to detailed embodiments thereof, it will be understood by those skilled in the art that various changes, omissions and additions in form and detail thereof may be made without departing from the spirit and scope of the claimed invention.

In the Claims:

1. A multiple piece electrode for use in an electrical discharge machining device comprising:
   (a) at least one conductive tooth having a hole there through,
   (b) at least one conductive elongated rod, said rod passing through said hole, and
   (c) means for securing the rod to the tooth.

2. The multiple piece electrode of claim 1 wherein the tooth is made of a material selected from the group consisting of copper, copper alloys, graphite, copper-tungsten, tungsten, gold, silver, tin, platinum, lead, zinc, iron, nickel, tungsten, brass, and copper-tungsten.

3. The multiple piece electrode of claim 1 wherein the rod is selected from the group consisting of tungsten, brass and copper-tungsten.

4. The multiple piece electrode of claim 1 further including a clamp mechanism.

5. The multiple piece electrode of claim 1 wherein the rod is made from a material different than that of the tooth.

6. The multiple piece electrode of claim 1 wherein the rod is hollow.

7. A method of forming diffusion holes in an article by electrical discharge machining comprising the steps of:

(a) inserting into an electrical discharge machining device a multiple piece electrode comprising (i) at least one tooth, wherein the tooth is placed in close proximity to a work piece to form a gap across which an electric charge may be transmitted to erode a portion of the work piece, (iii) at least one movable, elongated rod, wherein the rod is positioned through the tooth, and (iii) means for securing the rod to the tooth,

(b) advancing the electrode longitudinally into the work piece such that the rod forms a deep, small diameter hole in the work piece and the tooth forms a diffused area at one end of the hole.

8. The method of claim 7 further comprising the step of rotating the rod.

9. The method of claim 7, wherein the rod is hollow and a dielectric fluid is flowed through the rod.

10. The method of claim 7 further comprising a refeed system which positions the rods to a desired length, wherein the refeed system includes an electrode length master which is positioned in front of the electrode.

11. A method of forming diffusion holes in an article by electrical discharge machining comprising the steps of:

(a) inserting into an electrical discharge machining device a multiple piece electrode comprising (i) at least one tooth, wherein the tooth is placed in close proximity to a work piece to form a gap across which an electric charge may be transmitted to erode a portion of the work piece, (iii) at least one movable, elongated rod, wherein the rod is positioned through the tooth, and (iii) means for securing the rod to the tooth,

(b) advancing the tooth longitudinally into the work piece such that the tooth electrically discharge machines a diffused area at one end of the hole, and

(c) advancing the rod longitudinally into the work piece such that the rod electrically discharge machines a deep, small diameter metering section from the diffused area into the work piece.

12. The method of claim 11 further comprising the step of rotating the rod.

13. The method of claim 11, wherein the rod is hollow, further comprising the step of passing a dielectric fluid through the rod.

fig. 1

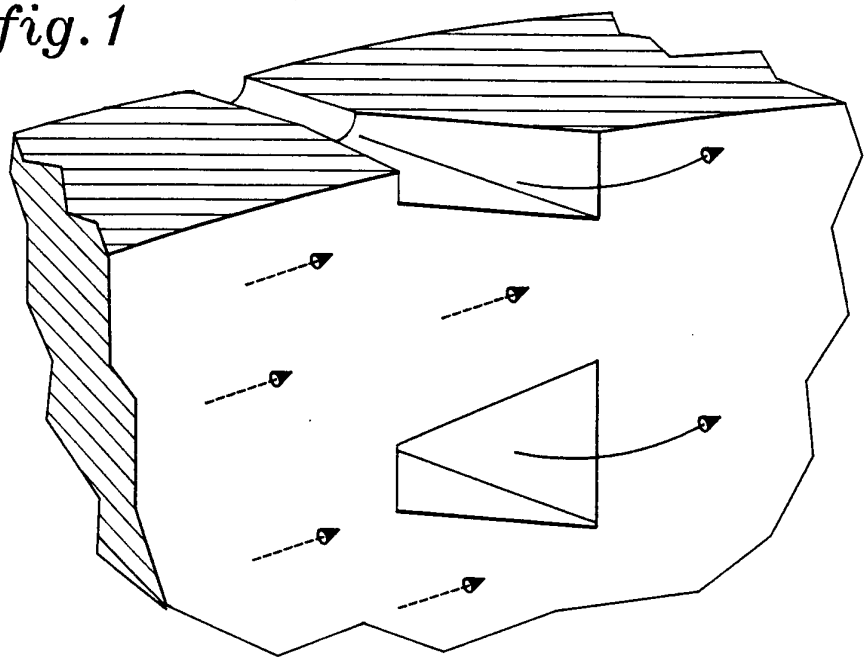

fig. 2

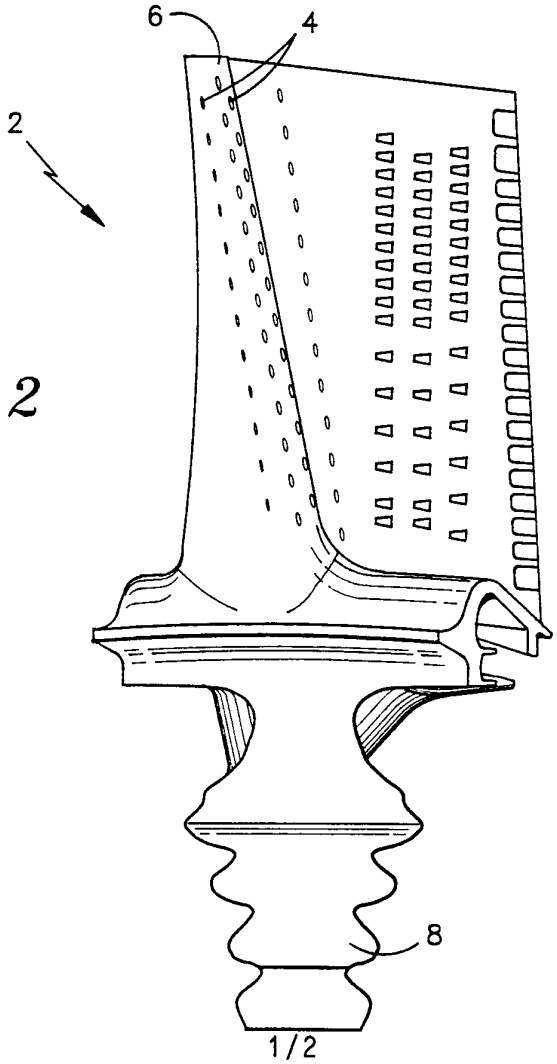

fig.3

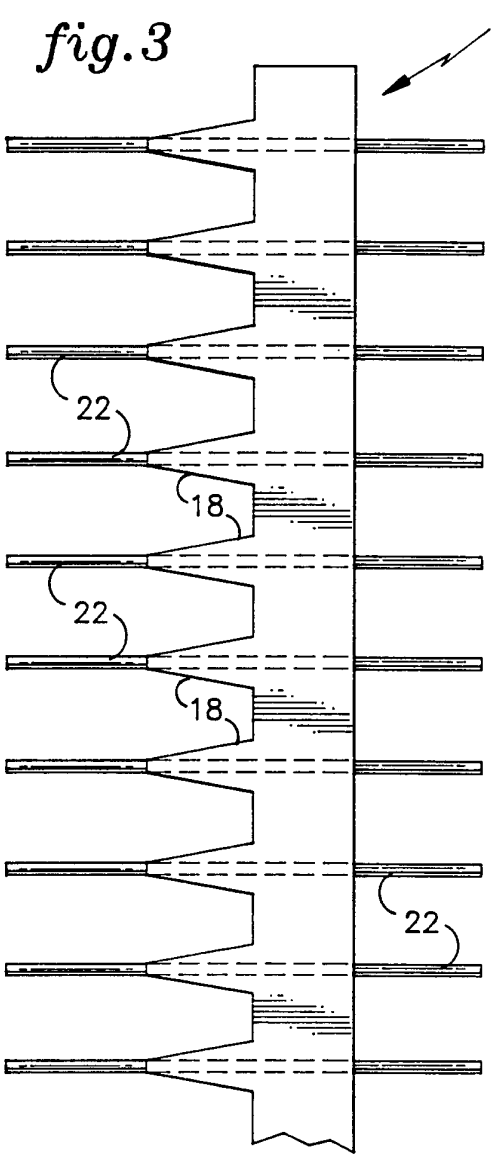

fig.4

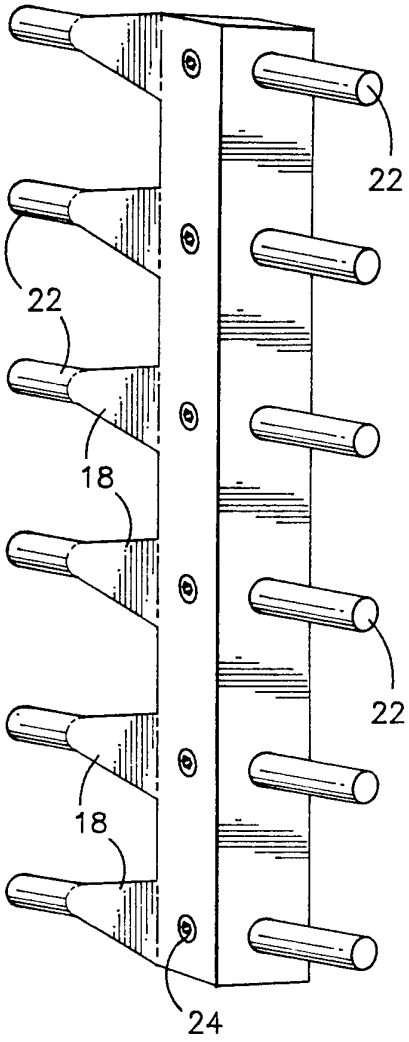

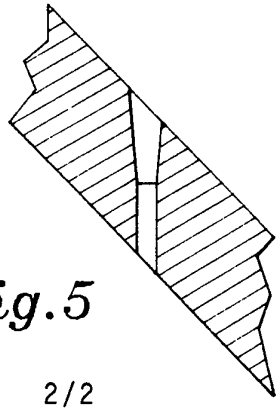

fig.5

INTERNATIONAL SEARCH REPORT

national Application No
PCT/US 94/14268

A. CLASSIFICATION OF SUBJECT MATTER
IPC 6 B23H9/10 B23H9/14

According to International Patent Classification (IPC) or to both national classification and IPC

B. FIELDS SEARCHED

Minimum documentation searched (classification system followed by classification symbols)
IPC 6 B23H

Documentation searched other than minimum documentation to the extent that such documents are included in the fields searched

Electronic data base consulted during the international search (name of data base and, where practical, search terms used)

C. DOCUMENTS CONSIDERED TO BE RELEVANT

Category °	Citation of document, with indication, where appropriate, of the relevant passages	Relevant to claim No.
Y A	GB,A,2 177 644 (INST ELEKT ARIFOVA AN UZBEX) 28 January 1987 see page 1, line 5 - line 11 see page 2, line 61 - line 65 see page 2, line 90 - line 110 see page 3, line 5 - line 9 see page 3, line 16 - line 20 see figures 1,2,5	1,2,4,7, 8,10-12 3,5,6,9, 11-13
Y A	FR,A,1 269 229 (LES CONSTRUCTIONS GUINARD) 15 December 1961 see page 1, right column, line 19 - line 32 see page 2, left column, line 25 - line 36 see page 2, right column, line 7 - line 19 see claims 4-6; figures 4-6	1,2,4,7, 8,10 3,5,6

-/--

[X] Further documents are listed in the continuation of box C.

[X] Patent family members are listed in annex.

° Special categories of cited documents :

"A" document defining the general state of the art which is not considered to be of particular relevance

"E" earlier document but published on or after the international filing date

"L" document which may throw doubts on priority claim(s) or which is cited to establish the publication date of another citation or other special reason (as specified)

"O" document referring to an oral disclosure, use, exhibition or other means

"P" document published prior to the international filing date but later than the priority date claimed

"T" later document published after the international filing date or priority date and not in conflict with the application but cited to understand the principle or theory underlying the invention

"X" document of particular relevance; the claimed invention cannot be considered novel or cannot be considered to involve an inventive step when the document is taken alone

"Y" document of particular relevance; the claimed invention cannot be considered to involve an inventive step when the document is combined with one or more other such documents, such combination being obvious to a person skilled in the art.

"&" document member of the same patent family

Date of the actual completion of the international search	Date of mailing of the international search report
27 March 1995	12.04.95

Name and mailing address of the ISA	Authorized officer
European Patent Office, P.B. 5818 Patentlaan 2 NL - 2280 HV Rijswijk Tel. (+ 31-70) 340-2040, Tx. 31 651 epo nl, Fax: (+ 31-70) 340-3016	Haegeman, M

Form PCT/ISA/210 (second sheet) (July 1992)

C.(Conunuation) DOCUMENTS CONSIDERED TO BE RELEVANT

Category °	Citation of document, with indication, where appropriate, of the relevant passages	Relevant to claim No.
Y	FR,A,2 180 987 (GEN ELECTRIC) 30 November 1973	11,12
A	see page 1, line 1-5 see page 1, line 30 - line 33 see page 2, line 11 - line 27 see claims 1,4; figures 1-3	1-10
A	SU,A,174 934 (KHOLODNOV) 25 July 1962 Derwent abstract, Class 49m, 18/65	3-5
A	EP,A,0 173 749 (FANUC LTD) 12 March 1986 see abstract; figure 1	6,8,9, 12,13
A	EP,A,0 227 581 (UNITED TECHNOLOGIES CORP) 1 July 1987 see the whole document	7,11
A	FR,A,2 403 158 (GEN ELECTRIC) 13 April 1979 cited in the application see the whole document	1-13

INTERNATIONAL SEARCH REPORT

Information on patent family members

national Application No
PCT/US 94/14268

Patent document cited in search report	Publication date	Patent family member(s)		Publication date
GB-A-2177644	28-01-87	WO-A-	8600840	13-02-86
		CA-A-	1245728	29-11-88
		CH-A-	669349	15-03-89
		FR-A,B	2572665	09-05-86
		SE-B-	460347	02-10-89
		SE-A-	8601445	27-03-86
		SE-A-	8804391	05-12-88
FR-A-1269229	15-12-61	NONE		
FR-A-2180987	30-11-73	BE-A-	795869	18-06-73
		CA-A-	1006846	15-03-77
		DE-A-	2311695	25-10-73
		GB-A-	1433033	22-04-76
		JP-A-	49021342	25-02-74
		US-A-	3795604	05-03-74
		US-A-	3875038	01-04-75
SU-A-174934		NONE		
EP-A-0173749	12-03-86	JP-A-	60172423	05-09-85
		WO-A-	8503657	29-08-85
		US-A-	4705932	10-11-87
EP-A-0227581	01-07-87	US-A-	4650949	17-03-87
		AU-B-	592842	25-01-90
		AU-A-	6667986	25-06-87
		CA-A-	1261005	26-09-89
		JP-A-	62228328	07-10-87
FR-A-2403158	13-04-79	US-A-	4197443	08-04-80
		DE-A,C	2840103	29-03-79
		GB-A-	1600777	21-10-81
		JP-B-	1025651	18-05-89
		JP-C-	1552304	23-03-90
		JP-A-	54063492	22-05-79