R. H. BURKE & P. HARRINGTON.

EXCAVATING MACHINE.

APPLICATION FILED JAN. 6, 1913.

1,100,052.

Patented June 16, 1914.

2 SHEETS—SHEET 1.

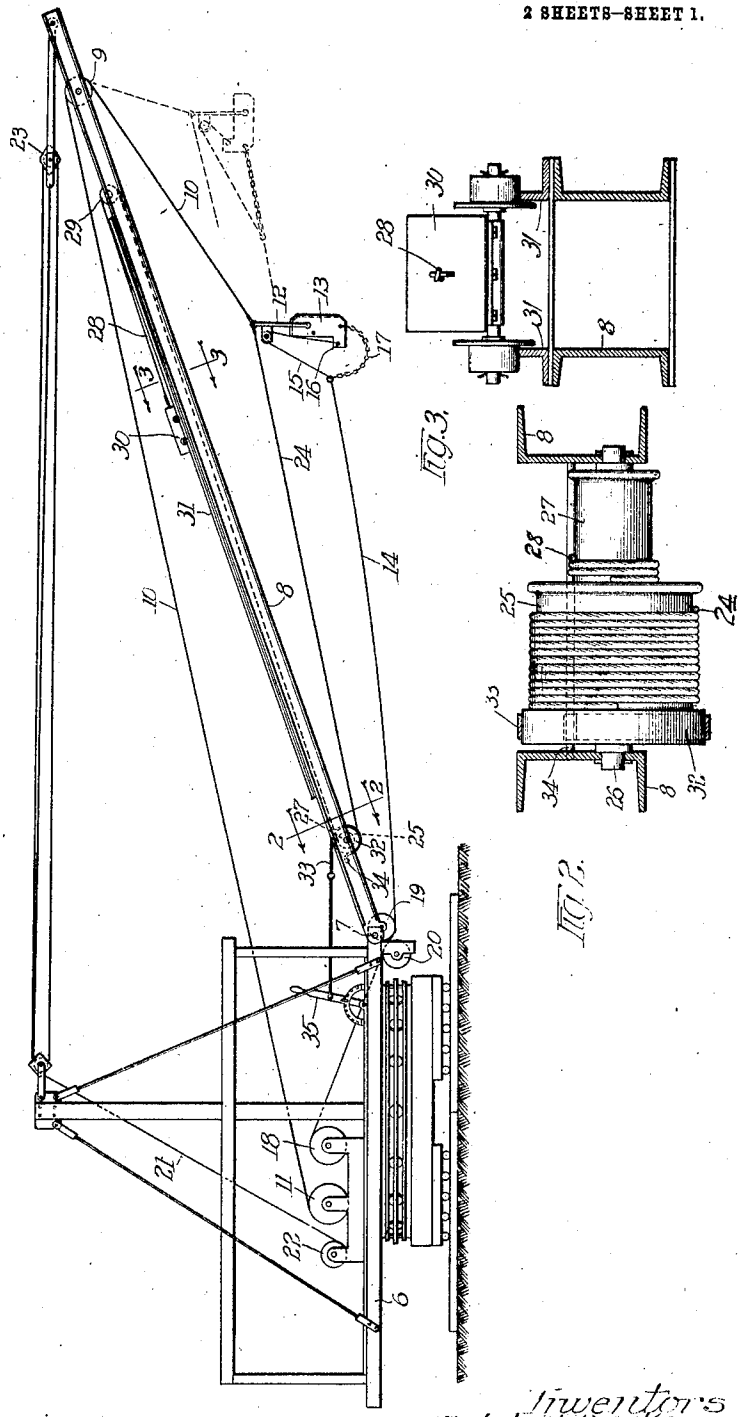

FIG. 1.

FIG. 3.

FIG. 2.

Witnesses:
Robert H. Weir
Leonard W. Novander

Inventors
Ralph H. Burke
Philip Harrington
By: Brown, Williams, Bell, Hanson & Boettcher
Attys.

R. H. BURKE & P. HARRINGTON.

EXCAVATING MACHINE.

APPLICATION FILED JAN. 6, 1913.

1,100,052.

Patented June 16, 1914.

2 SHEETS—SHEET 2.

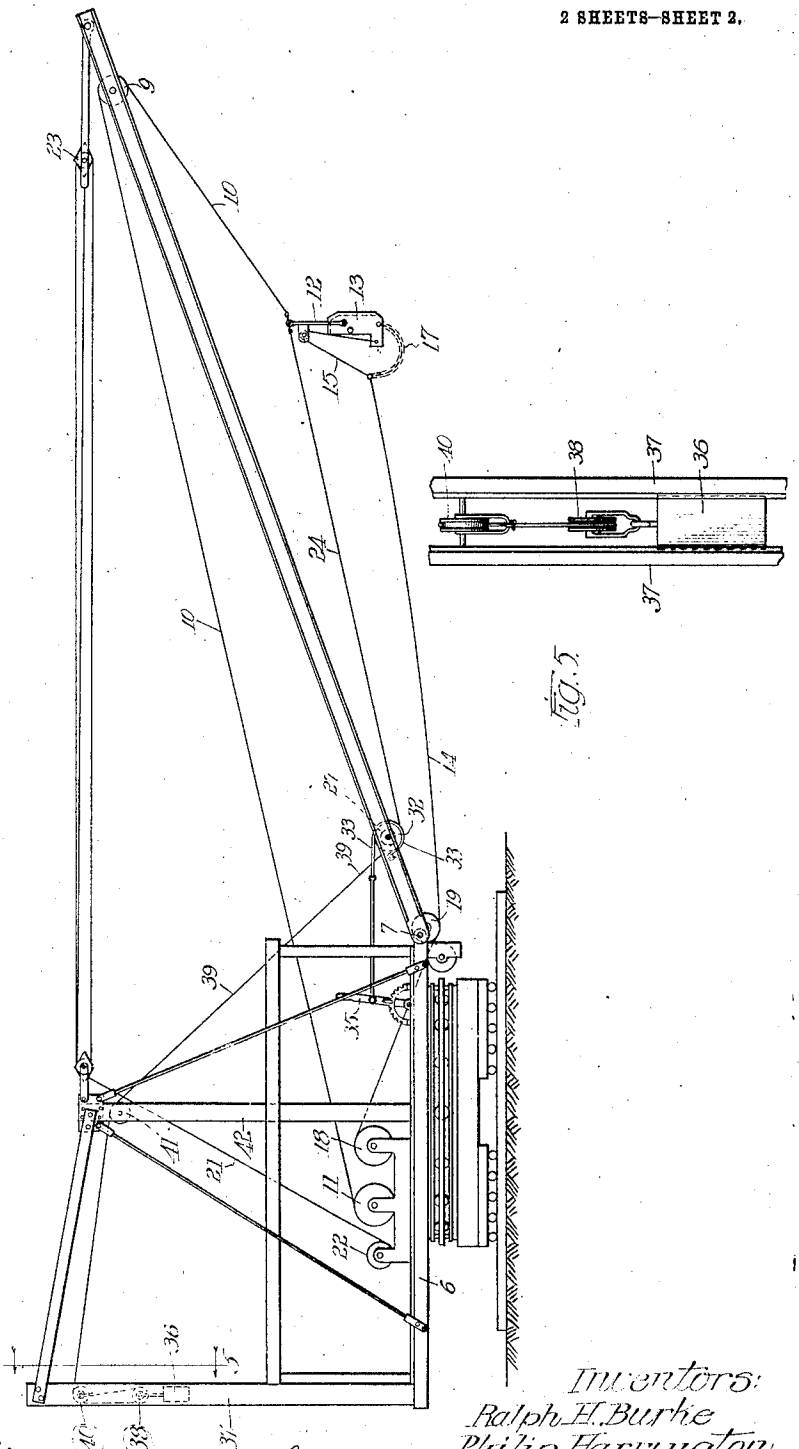

FIG. 4.

FIG. 5.

Witnesses:
Robert S. Weir
Leonard W. Novander.

Inventors:
Ralph H. Burke
Philip Harrington
By: Brown, Williams, Dell, Hanscom & Brettcher
Attys

UNITED STATES PATENT OFFICE.

RALPH H. BURKE, OF MORGAN PARK, AND PHILIP HARRINGTON, OF CHICAGO, ILLINOIS.

EXCAVATING-MACHINE.

1,100,052. Specification of Letters Patent. Patented June 16, 1914.

Application filed January 6, 1913. Serial No. 740,285.

To all whom it may concern:

Be it known that we, RALPH H. BURKE and PHILIP HARRINGTON, citizens of the United States, residing, respectively, in Morgan Park and Chicago, in the county of Cook and State of Illinois, have invented certain new and useful Improvements in Excavating-Machines, of which the following is a full, clear, concise, and exact description, reference being had to the accompanying drawings, forming a part of this specification.

Our invention relates to excavating machines and its object is an improvement over such machines as heretofore used.

Our invention contemplates an arrangement by which the bucket which is used with excavating machines may be placed in any desired position, in addition to that point directly beneath the point of suspension so that the load may be dumped from said bucket.

Our invention comprises means for use in conjunction with the bucket, so that it may be held in a position very close to the supporting mechanism during the dumping operation, the idea being that the bucket, after being filled, can be brought to any desired position by the drag line or cable, and held in such position by an auxiliary cable while the dumping operation is taking place.

Our invention will be better understood by referring to the accompanying drawings in which—

Figure 1 is an elevational view of an excavating machine embodying the features of our invention. Fig. 2 is a cross-sectional view taken on the line 2—2 illustrating drums and br king mechanism comprising part of our invention. Fig. 3 is a cross-sectional view taken on line 3—3 of Fig. 1. Fig. 4 is an elevational view of a modified arrangement wherein the weight employed is adapted for vertical movement at the rear of the supporting mechanism, this weight being suitably connected to the bucket by means of a cable. Fig. 5 is a view illustrating the weight mechanism and the guides therefor.

Referring first to Figs. 1 to 3 inclusive, we have shown a supporting platform 6, of the excavator, which is arranged to be rotated upon rollers which engage a suitable movable base so that this platform may be placed in any desired position. As a matter of fact, this platform and the associated mechanism may be of any of the well known types of machines. Pivoted at 7, is a boom 8, of any desired construction, which has pivoted at its outer end a sheave 9, which guides a cable 10, one end of which is secured to a drum 11, of an engine of any well known construction, and the other end is secured to the bail 12, pivoted to a bucket 13. This bucket may be of any suitable construction. A drag line or cable 14 has one branch 15, which passes over a sheave suitably mounted on the bail and is secured to the bucket at 16. A chain 17, is also secured to the bucket, and is suitably connected to the cable 14, the other end of which is secured to a drum 18, of the engine. It might be well to state that this engine may be of any construction, and therefore, is merely shown diagrammatically to facilitate the description. This drag line or cable 14, passes over suitable guiding sheaves 19 and 20.

The boom 8, which may be constructed of wood or metal, is raised and lowered by means of a cable 21, which, as shown, is secured to a drum 22, of the engine, and is connected at one end to the block 23, connected to the end of the boom, this being the arrangement which is usually employed, which is well known in this class of machinery. An auxiliary cable 24, is secured to the bail 12, in any suitable manner and is also secured to the drum 25, as shown in Figs. 1 and 2. This drum is preferably carried by the boom in any suitable manner, as by means of a rod 26, held in place on the boom by suitable means.

At one side of the drum 25, and having a fixed relation thereto, is a drum 27, which is a smaller drum than the drum 25. Secured to this smaller drum is a cable 28, leading outward to the end of the boom and around a sheave 29, carried by the boom. This cable is also fastened to a weight 30, which preferably has rollers for engagement with a track 31, made preferably of L-shape structural shapes.

One of the flanges of the drum 25, has a comparatively wide surface adapted to be engaged by a brake band 33, one end of which is fastened to a rod 34, mounted on the boom. The other end of this brake band is suitably connected to a manually oper-

ated brake lever 35 pivoted to the supporting platform 6. This brake lever has associated therewith the customary means as shown for holding it in any desired position.

As is well known in the operation of this type of machines, the bucket 13, is lowered and dragged along by means of a drag line or cable 14, so as to fill the bucket with material, which is to be transferred from one place to another. After the bucket has been filled it is raised by means of the drum 11, to the required height, the cable 14, in the meantime being maintained taut so that the bucket is prevented from tipping when loaded. The moment that this cable 14 is allowed to become slack, the bucket will rotate about the pivots on the bail, thus causing the material to fall from the bucket after the bucket is raised into a position clear of the ground, the drag line or cable 14, may be drawn in so that the bucket is in the desired position, for example, as shown in the drawings in full lines. The cable 10, in the meantime, is let out in accordance with the movement of the bucket. The weight 30, acting through the drums 25 and 27, maintains the cable 24, taut so that when the bucket has been drawn to the required position, the operator manipulates the brake lever 35, in order to set the brake band tightly against the surface 32, thus preventing any further movement of the bucket. After this has been done, the operator allows the drag line 14, to slacken, whereupon, the bucket is dumped in the position to which it has been drawn, after which the brake band is loosened, thus permitting the bucket to swing outwardly so as to be in a position to be lowered and again filled.

The weight of the bucket, acting through cable 24, exerts a greater rotating force on the drum 25 than the weight 30, acting through cable 28, exerts on the drum 27, so that the bucket is free to swing when the brake band has been loosened, and thus it carries the weight outwardly along the boom in accordance with the movement of this bucket. The arrangement is such that the bucket is always permitted to swing into the desired working or lowering position against the action of the weight, the purpose of this weight being to automatically maintain the cable 24, in a taut condition for any position of the bucket.

Our invention comprises improved means whereby the bucket can be dumped in any position between the sheave 9, and the drums 25 and 27, this being accomplished without changing the angular position of the boom. Our invention is of great utility in connection with all kinds of excavating machines, particularly those wherein a long boom is employed, inasmuch as the bucket can be filled and raised in order to permit the boom to be swung from side to side if desired, and then the bucket can be dumped in the required position without in any way changing the angular position of the boom.

Referring now to the modified arrangement illustrated in Figs. 4 and 5, it will be observed that the weight 36, is arranged for vertical movement in accordance with the position of the bucket. The construction of the parts is similar in all respects to that shown in Figs. 1 and 2, except that the weight is adapted to be guided by suitable members 37, at each side thereof, instead of being movable on the boom, as shown and described heretofore. This weight has preferably a sheave 38, mounted thereon and a cable 39 passes over this sheave, and the sheave 40, which is suitably secured as shown. This cable also engages a sheave 41, mounted near the top of the members, and is fastened to the smaller drum 27, as illustrated. The operation of this weight with respect to the bucket is the same as previously described, that is to say, it operates to maintain the cable 24, in a taut condition, and in accordance with any position of the bucket.

While we have herein shown and described certain features of our invention, we do not wish to be limited to the precise means as shown, inasmuch as it will be apparent that, instead of employing weights in the manner shown, we wish it to be understood that any device or mechanism may be employed to act on a cable which is secured to the bucket and to maintain this cable in a taut condition in accordance with any position of the bucket.

We claim as new and desire to secure by Letters Patent the following claims:

1. In an excavating machine, the combination of a movable support, a hinged member extending therefrom, a bucket for holding material, devices for raising and lowering said bucket relatively to said member, a drag cable fastened to said bucket, and adapted for holding said bucket in a position to prevent the material from being dumped therefrom, a bail for said bucket, a cable secured to the bail to hold said bucket in any desired position when said drag cable is slackened so as to permit the bucket to be dumped, a weight attached to said cable for maintaining it in a taut condition.

2. In an excavating machine, the combination of a movable support, a boom pivoted to said support, a bucket for holding material, means for raising and lowering said bucket relatively to said boom, a drag cable fastened to said bucket, means for drawing in said cable and filling the bucket, a cable secured to said bucket for determining the dumping position of said bucket, and weighted means for automatically maintaining said cable in a taut condition.

3. In combination, an excavating bucket,

a bail for said bucket, means for controlling the dumping position of said bucket comprising a cable secured to said bail, a weight for maintaining said cable in a taut condition, and devices for controlling said weight.

4. The combination of excavating apparatus provided with an excavating bucket and a bail pivoted thereto, a cable secured to said bail, a weight for maintaining said cable in a taut condition for any position of said bucket, and mechanism for controlling the position of said weight.

5. In combination, a support, a bucket, means for operating said bucket, a bail on said bucket, a cable attached to said bail, a weight acting on said cable to maintain it in a taut condition, and weight controlling mechanism engaging said cable.

6. The combination of excavating apparatus comprising a bucket, a bail pivoted to said bucket, a hoisting cable secured to said bail, a drag cable secured to said bucket, a second cable also secured to the bail so as to hold said bucket while it is being dumped by letting out the drag cable, mechanism for maintaining said second cable in a taut condition for any position of said bucket, and braking means for said mechanism.

7. The combination of excavating apparatus comprising a bucket, a bail pivoted to said bucket, a hoisting cable secured to the bail, a haul cable secured to the bucket, a second cable also secured to the bail so as to hold said bucket while it is being dumped by letting out the haul cable, and mechanism for maintaining said second cable in a taut condition for any position of said bucket.

In witness whereof, we hereunto subscribe our names this fourth day of January, 1913.

RALPH H. BURKE.
PHILIP HARRINGTON.

Witnesses:
LEONARD W. NOVANDER,
CLIFFORD C. DEWEES.