June 21, 1938. E. J. WOLF 2,121,417

MATTRESS

Filed June 7, 1937

Fig. 1.

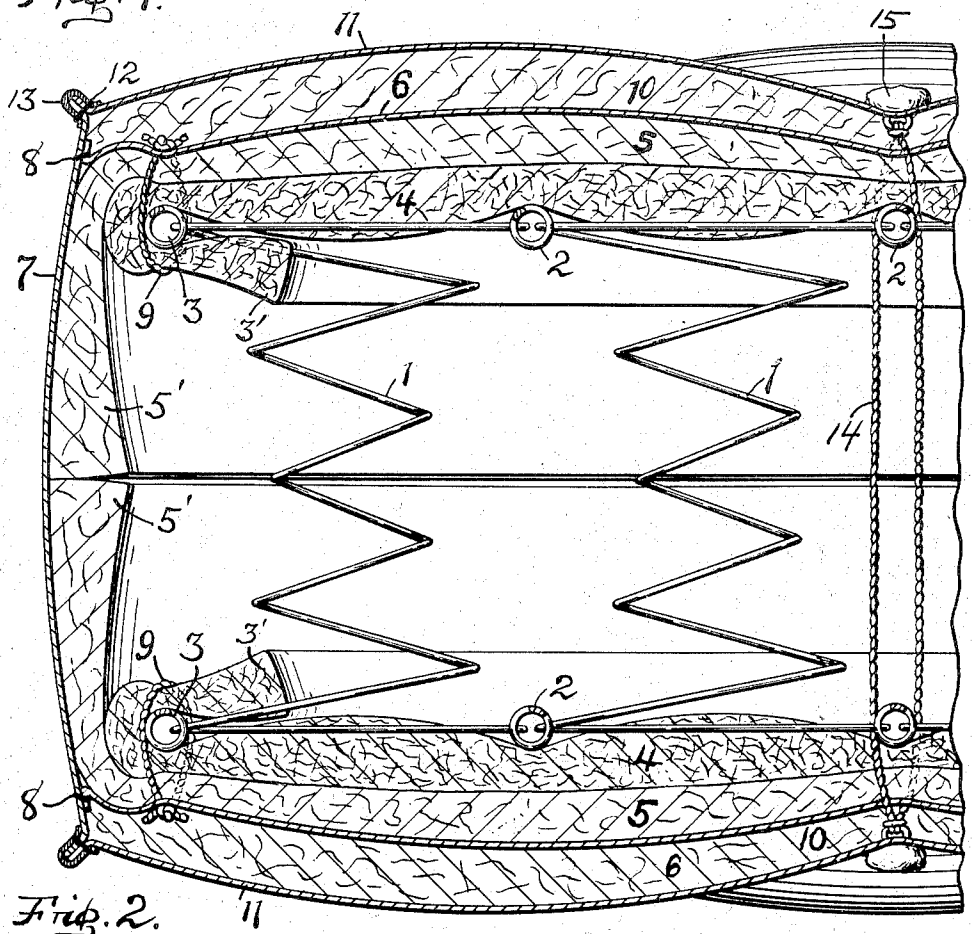

Fig. 2.

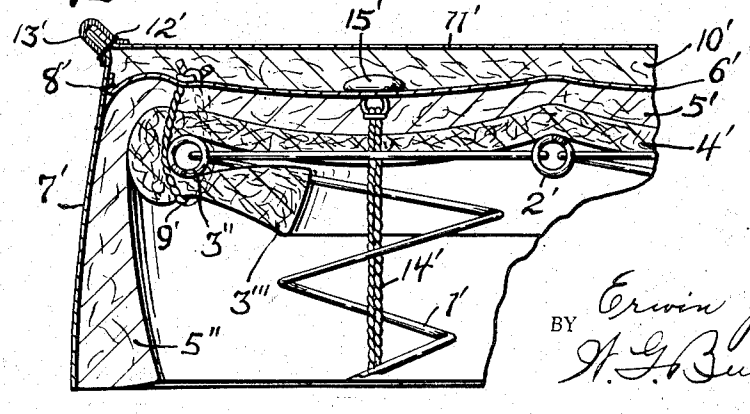

INVENTOR.
BY Erwin J. Wolf.
H. G. Burns ATTORNEY.

Patented June 21, 1938

2,121,417

UNITED STATES PATENT OFFICE

2,121,417

MATTRESS

Erwin J. Wolf, Fort Wayne, Ind.

Application June 7, 1937, Serial No. 146,782

1 Claim. (Cl. 5—351)

This invention relates to improvements in inner spring mattresses in which a fabricated spring structure is encased in a padded boxing.

An object of the invention is to so arrange the padding in conjunction with the spring structure especially around the border thereof so as to have the effect of a soft marginal roll that maintains its original formation during ordinary use even though subjected to abuse.

Another object of the invention is to provide an easily applied connection for securing together the border wire of the spring structure, the inner padding and inner cover of the mattress.

Other objects and advantages of the invention will appear in the following description.

An illustrative embodiment of the invention is shown in the accompanying drawing, in which:—

Fig. 1 is a fragmentary vertical section of a mattress in which the invention is embodied; and

Fig. 2 is a similar view showing the same structure as Fig. 1, but in a modified form.

The illustrative embodiment of the invention includes a fabricated spring structure made up of a group of spiral springs 1 in a conventional arrangement spaced apart and connected together by helical cross wires 2, the outermost of said spiral springs being encompassed by and connected with border wires 3. The group of spiral springs, cross wires and border wires secured together in the usual manner constitute a spring unit in the mattress structure.

The top and the bottom of the mattress structure are similarly formed, preferably, but not necessarily, the top structure is the counterpart of the bottom structure.

As an example, there is placed over the top of the spring unit a base stratum 4 of suitable material, such as sisal, over which is disposed an inner stratum 5 of padding, such as felt, and over said inner stratum of felt is spread an inner covering 6 of suitable material, such as burlap. The marginal edges 3' of the base stratum of sisal is folded back so that the border wire 3 is enveloped thereby, and the marginal edges 5' of the inner padding extend beyond the folded margins of sisal and abut the corresponding extending marginal edge of the opposite inner stratum of padding so that a limp wall is formed by the extending margins of the inner padding strata that completely encompass the spring unit between the top and bottom thereof.

Surrounding the abutting extending margins 5' of the inner padding strata is disposed a boxing strip 7 to which is connected by stitching 8 the marginal edges of the inner coverings of burlap 6, thus completely encasing the spring unit, base strata 4, and inner padding strata 5.

The stitched connections between the inner coverings 6 and the boxing strip 7 are spaced suitably distant respectively from the top and bottom of the boxing strip.

After the spring unit, base strata of sisal, inner padding strata 5, inner coverings 6, and boxing strip have been assembled, loops 9 are applied through the burlap inner coverings 6, inner padding strata 5, the folded marginal edges of the base strata 4 of sisal and surround the border wires 3. In this manner the parts through which the loops extend are firmly secured in definite relation with the border wires whereby is substantially sustained the upper and lower marginal welts of the mattress that are provided by the marginal edges of the base strata that envelope the border wires and which are secured with the inner padding strata and inner coverings of burlap.

There is spread upon each inner covering 6 of burlap an outer padding stratum 10 of soft material, such as felt, and an outer cover 11 is then spread over the outer stratum, and said marginal edges of the outer covering 11 are secured to the corresponding edges of the boxing strip 7 by stitching indicated by 12, preferably, there being applied a tape 13 which is stitched together with the meeting edges of the outer covering and the boxing strip.

The mattress thus constructed, if desired, may be tufted as in the common practice by placing tufting loops 14 at selected points through the mattress structure and attaching buttons 15 to the ends of the loops upon the exterior of the outer coverings.

In Fig. 2 is shown a modified arrangement for applying the tufting loops and buttons. In this form the tufting loop 14' extends through the base stratum 4', inner padding stratum 5' and the inner covering 6' of burlap, the button 15' being disposed upon the outermost face of the burlap inner covering and connected with the loop. The outer padding stratum 10' and the outer covering 11' in this instance are not tufted, and thus the top and bottom surfaces of the mattress when completed present flat planes.

The welts formed by securing the marginal edges of the base strata around the border wires are augmented by the overhanging inner strata of padding, and by applying the loops 9 around the border wires and through the back-turned margins of the base strata, the inner padding and the inner covering, and the welts thus formed are

held permanently in place and are concealed by the outer padding, boxing strip and outer coverings.

What I claim is:—

A mattress consisting of a spring unit formed of a group of connected springs and provided with surrounding border wires at the top and bottom thereof, base strata of filling material disposed upon the top and bottom of said unit, the marginal edges of each stratum being folded back so as to envelope the corresponding wires, inner strata of padding disposed upon the outer faces of said base strata, the marginal edges of which overhang the folded edges of the base strata, inner coverings disposed over said inner padding strata, a boxing strip encompassing said unit and the overhanging edges of said inner padding strata, the edges of said inner coverings being stitched in connection with said boxing strip, whereby the spring unit, base and inner padding strata are completely encased thereby, loops applied through said inner coverings and adjacent strata encompassing the back-folded margins of said base strata and corresponding wires enveloped thereby, outer strata of padding disposed over said inner coverings, and outer coverings extending over said outer padding strata, the edges of said outer covering and the corresponding edges of said boxing strip being secured together.

ERWIN J. WOLF.