Jan. 1, 1957 W. A. RINGLER 2,776,081

CARTON

Filed Jan. 14, 1953 3 Sheets-Sheet 1

FIG-1

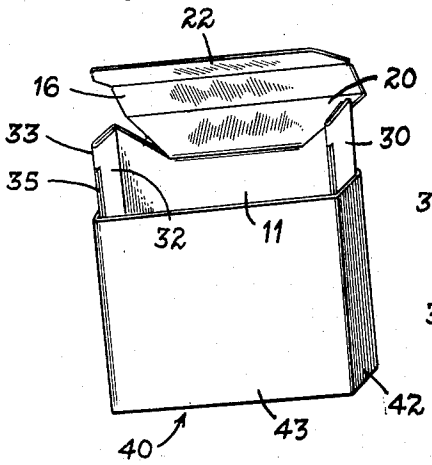

FIG-2

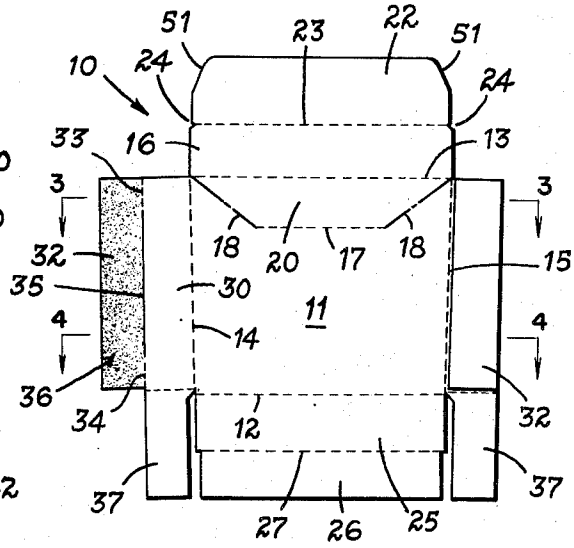

FIG-3

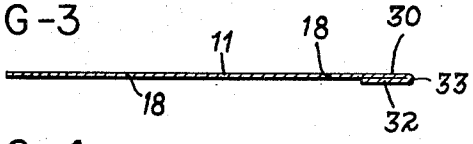

FIG-4

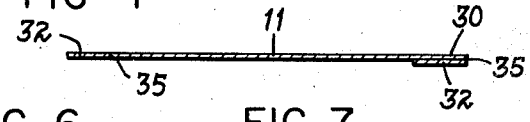

FIG-5

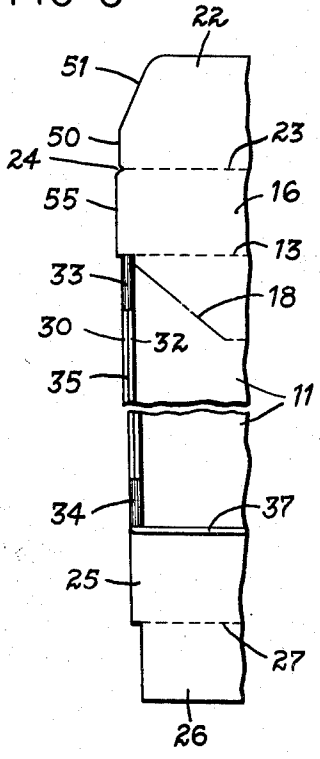

FIG-6

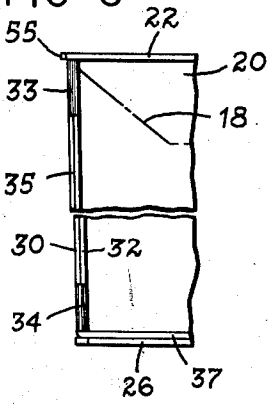

FIG-7

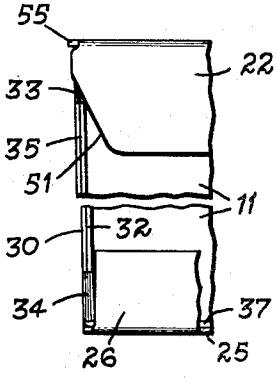

INVENTOR.

WILLIAM A. RINGLER

BY

Marechal Biebel French & Bugg

ATTORNEYS

Jan. 1, 1957 W. A. RINGLER 2,776,081

CARTON

Filed Jan. 14, 1953 3 Sheets-Sheet 2

FIG-9

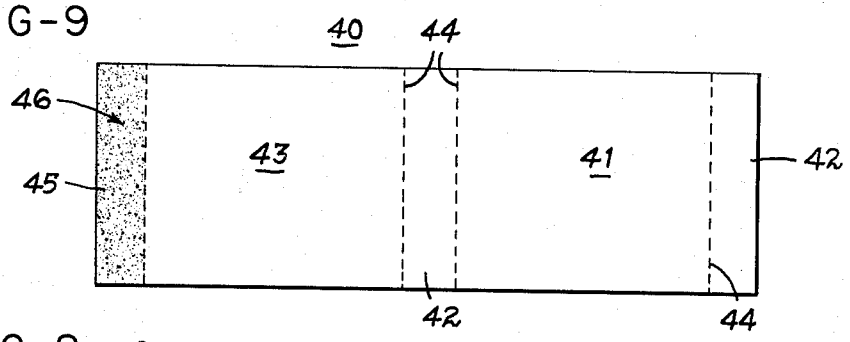

FIG-8

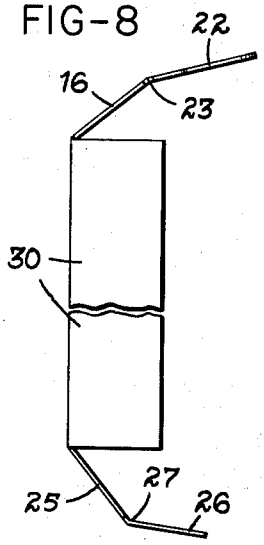

FIG-10

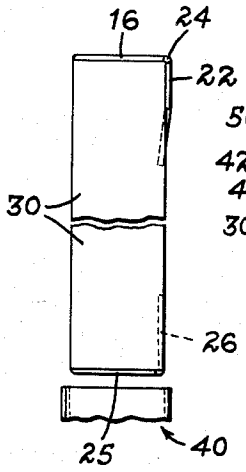

FIG-12

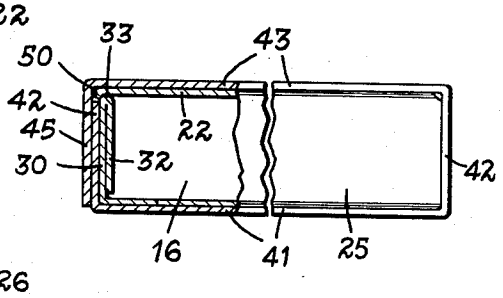

FIG-13

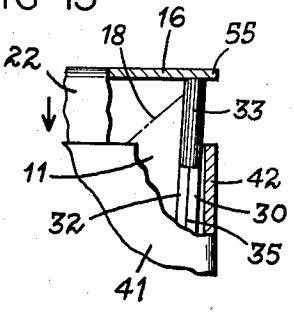

FIG-11

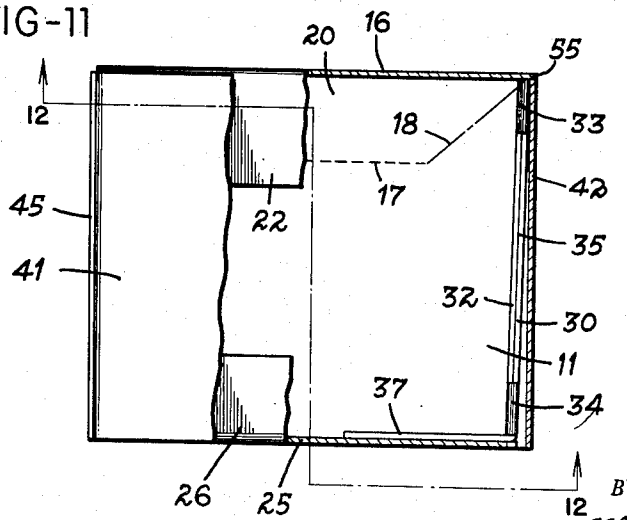

INVENTOR.
WILLIAM A. RINGLER
BY
Marechal Biebel French & Bugg
ATTORNEYS

Jan. 1, 1957 W. A. RINGLER 2,776,081

CARTON

Filed Jan. 14, 1953 3 Sheets-Sheet 3

FIG-14

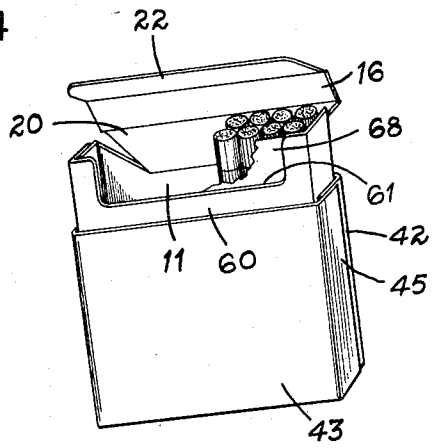

FIG-16

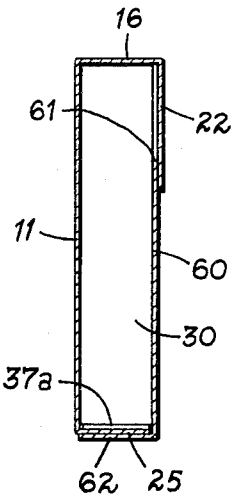

FIG-15

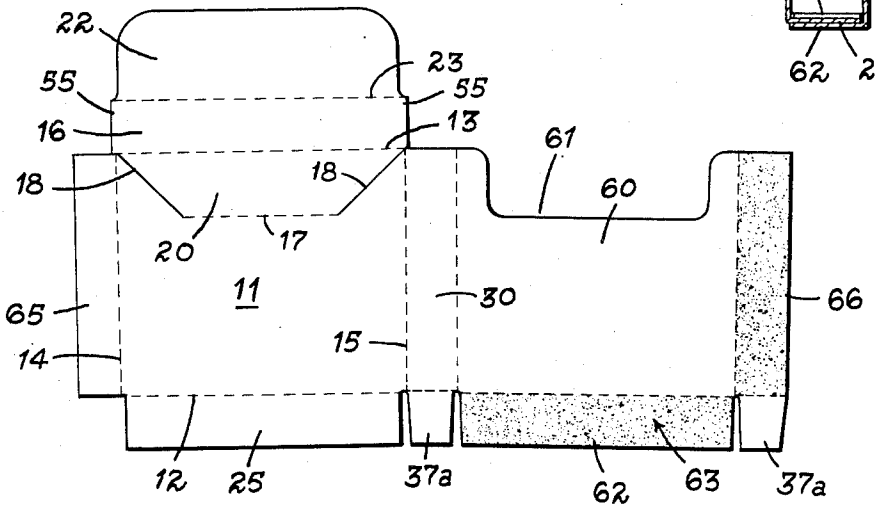

FIG-17

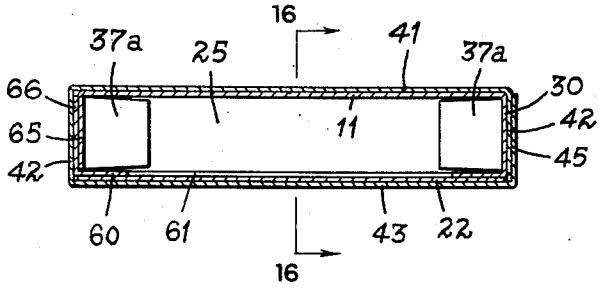

INVENTOR.
WILLIAM A. RINGLER
BY
Marshall Biebel French & Bugg
ATTORNEYS

United States Patent Office

2,776,081

Patented Jan. 1, 1957

2,776,081

CARTON

William A. Ringler, Wayne, Pa., assignor to The Gardner Board and Carton Co., Middletown, Ohio, a corporation of Ohio

Application January 14, 1953, Serial No. 331,197

5 Claims. (Cl. 229—9)

This invention relates to cartons of paper material and more particularly to a carton having a slide intended to be opened from one end to properly expose the contents.

In the packaging of articles such as cigarettes and the like it is desirable to provide a carton or box of paper material including a sleeve open at both ends, with a slide being arranged to be received within the sleeve in the closed position of the carton, and to be pressed partially out of the sleeve in the open position, to expose the contents of the box. The slide incorporates side and end walls as well as overlying flaps at the top and bottom in order properly to retain the contents. One of the flaps, that at the top end, is preferably cut into the bottom wall to make it more flexible and thus it is desirable that the slide be moved in the proper direction to expose the top rather than the bottom flap. This facilitates access to the contents when the slide is opened in the proper way, but makes it awkward and difficult to remove the contents if the slide should be projected from the sleeve in the opposite direction.

It is accordingly the principal object of the present invention to provide a box or carton of paper material suitable for the packaging of cigarettes or the like in which the slide is arranged to be received in a sleeve and so constructed that it can be opened readily by advancing or projecting the slide in only one direction, i. e., the direction which will properly expose and permit ready access to the contents of the carton.

It is a further object to provide such a carton in which the slide has an end flap at one end which is wider than the width of the sleeve in which the slide is mounted such that the end flap overlaps the sleeve and tends to resist projections of the slide except in the proper direction.

It is also an object to provide a carton of this type in which the side walls of the slide are formed by partial cut and score lines so arranged that insertion into the sleeve is facilitated, the slide is frictionally retained in closed position, and the flap on the slide is allowed to seat in position without creating excessive friction thereon.

It is a further object to provide such a carton in which the top flap is also wider than the width of the sleeve and in the closed position of the slide is frictionally engaged internally to yieldingly hold the slide in closed position within the sleeve.

It is a still further object to provide a carton in which the bottom of the slide is tapered such as to tend to prevent removal thereof in the wrong direction and to facilitate insertion of the slide into the sleeve while filling and assembling the carton.

Other objects and advantages will be apparent from the following description, the accompanying drawing and the appended claims.

In the drawing—

Fig. 1 is a view in perspective of a carton constructed in accordance with the present invention;

Fig. 2 is a plan view of the blank for the slide of the carton, the side flaps at the right-hand side being folded;

Figs. 3 and 4 are sectional views on lines 3—3 and 4—4 respectively of Fig. 2;

Fig. 5 is a fragmentary view of the blank for the slide with one side wall erected and the bottom flap thereof turned inwardly;

Fig. 6 is a similar fragmentary view with the top and bottom flaps extending vertically upward;

Fig. 7 is a similar view with both flaps folded inwardly in their final operative positions;

Fig. 8 is a side elevational view of the blank with the side walls erected and with the end flaps partially erected;

Fig. 9 is a view of the blank for forming the sleeve;

Fig. 10 is a view showing the slide about to be inserted into the sleeve;

Fig. 11 is a view partially in plan and partially in horizontal section showing the slide in place in the sleeve;

Fig. 12 is a sectional view on the line 12—12 of Fig. 11;

Fig. 13 is an enlarged fragmentary view showing the construction of the corner of the slide and the relationship thereof to the sleeve;

Fig. 14 is a perspective view of a modified form of carton;

Fig. 15 is a view of the blank for making the modified carton;

Fig. 16 is a sectional view through the slide on the line 16—16 of Fig. 17; and

Fig. 17 is a transverse sectional view through the slide inserted in the sleeve, the section being taken through the top flap.

Referring to the drawings which disclose a preferred embodiment of the invention, a blank **10** is shown for forming the slide. It comprises a central bottom panel **11** having a bottom fold line **12** and an upper or top fold line **13** parallel thereto with two opposite fold lines **14, 15** which are not parallel but which taper toward each other. The amount of taper may vary and has been somewhat exaggerated in the drawing in order better to illustrate the construction, but it will be understood that the width of the bottom panel at its upper end in Fig. 2 is appreciably greater than the width at the bottom end.

An upper end flap **16** is integrally formed at the upper end of bottom panel **11**, being flexibly related thereto along fold line **17** with the diagonal cut or perforated lines **18** providing for greater ease of access to the contents when the carton is in open posiiton. Where perforations are used they retain the portion **20** of the bottom in the same plane as the main part of the bottom until the package is opened the first time. Also as will be evident from the drawing the width of end flap **16** is somewhat greater than the adjacent width of the bottom panel **11**.

Integrally joined to end flap **16** is a top extension flap **22** which is slightly narrower in width than flap **16** but of a width preferably not less than the width of adjacent bottom panel **11** and arranged to fold with respect thereto along fold line **23**. The corners at the ends of fold line **23** are notched out as shown at **24**.

At its lower end the bottom panel **11** has integral end flap **25** and extension flap **26** foldable thereon along fold line **27**. The flap **26** is preferably of less width than the adjacent width of panel **25**. Inner side wall panels **30** are arranged to fold along lines **14, 15** and outer side wall panels **32** are connected by means of score lines **33, 34** at each end and by a central cut line **35** to form a double wall side construction for the slide, suitable adhesive **36** being applied to retain the side walls in this folded over condition. End tabs **37** are adapted to be

folded within end flap 25 when the sides and ends are erected, and may be secured thereto by application of adhesive or left free as desired. The score line pattern of the tabs is shown in Fig. 2.

The sleeve is shown generally at 40 comprising top panel 41, side panels 42 and bottom panel 43, all integrally joined and separated by fold lines 44 with an extra overlapping flap 45 carrying adhesive 46 which is adapted to be secured to the flap 42, forming a simple sleeve construction of uniform cross-section.

When the sleeve is so assembled, its internal width between its side walls is substantially greater than the width of the bottom portion of panel 11 but less than the top thereof. The result is that the slide can be readily inserted into the sleeve with its narrow end foremost, and can likewise be readily projected out of the sleeve in the opposite direction. Fig. 10 shows the slide in position about to be introduced into the sleeve and it will be apparent that the lower extension flap 26, by reason of being slightly narrower than the space between side walls 32 (Fig. 7), is allowed to drop inwardly slightly below the level of the side walls (Fig. 10), which thereby facilitates insertion of the slide into the sleeve. As the slide travels into the sleeve friction between the slide and the sleeve increases proportionally until the slide has been fully inserted at which point the internal width of the sleeve at the top is substantially equal to or slightly in excess of the distance between the sidewall panels of the slide at the top and thus there is a tendency frictionally to retain the slide within the sleeve. The inwardly folding top extension flap 22 is allowed to rest on the shoulders formed by score lines 33 of the side wall panels (Figs. 7 and 10) and this tends to provide further frictional engagement at this point between the slide and the sleeve, since the overall thickness of the slide is increased by the overlaying flap 22, thereby fitting tightly into the sleeve at the upper end.

As the carton is closed, the wider portion of the slide is received within the sleeve and a gradually increasing frictional resistance is developed as the slide approaches its innermost position, shown in Fig. 11. By pressing the slide upwardly from the bottom relative to the sleeve, the contents are readily accessible and by lifting the top flap 22 the perforations 18 are broken and free access is provided to the interior.

The width of the top extension flap 22, while not as great as top end flap 16, is at least equal to the external space between opposite side walls 32 and hence as shown in Fig. 12 the outer edges 50 of flap 22 are squeezed and turned slightly downwardly as the slide is pressed to its innermost position, being rolled over the scored portions 33 of the side walls. As shown in Fig. 7, the bevel 51 on the top flap is such that it preferably clears the cut area 35 of the side walls but leaves a projecting portion over the areas 33 to accomplish this frictional and squeezing engagement as described immediately above.

The slide may be readily opened by applying pressure to the bottom end 25 causing the slide to be projected outwardly in the direction toward its wide end. The slide is not adapted for removal in the opposite direction because as will be evident from Fig. 13, the tapering side wall construction 30, 32 will wedge into the sleeve and tend to bind, thereby indicating to the user that the slide should be moved in the opposite direction. Further, since the top end flap 16 is of a width at least equal to the width of the sleeve, it forms a projecting portion 55 at either side which lies on top of the adjacent edges of the sleeve, and this portion 55 will thus engage or abut the sleeve and serve to resist or prevent such undesired removal in the wrong direction, and further indicate to the user that the slide should be opened by pressing in the opposite direction.

Referring to the modified construction shown in Figs. 14 through 17, a similar construction is shown to that already described, and corresponding parts carry the same reference numerals. In this form, however, an additional top panel 60 is employed which is of a shape generally corresponding to bottom panel 11, with a recessed portion 61 at its upper edge to facilitate access to the contents of the package. There is also the flap portion 62 carrying adhesive 63 by means of which the lower end of the package can be firmly secured in assembled position, as distinguished from the freely open construction of the previous form. The construction in this respect is shown in Fig. 16. In addition, side wall panel 65 is provided which overlaps the opposite side panel 66, the latter likewise carrying adhesive, and thus further stiffening the assembled slide construction. It will be further noted that end tabs 37*a* are relatively short and are intended to be folded inwardly at the bottom of the package, thereby completely closing the lower end thereof.

Reference to Fig. 17 will show that the double thickness provided by the overlapping of flaps 65 and 66 of the slide is located at one side of the carton with the double thickness provided by the overlapping walls 42 and 45 of the slide located on the opposite side of the package. The construction thus provides a firm and essentially strong arrangement throughout since it has triple thickness at each side, a double thickness at the bottom and likewise a double thickness of material on the front and back faces.

While the package is shown as containing cigarettes, and as employing a sheet 68 of metal foil or the like, it will be obvious that such protective packaging may be used as desired, and further that other articles may be packaged, the device furnishing a convenient construction for many articles having a somewhat similar shape.

The whole construction therefore is simple and inexpensive in manufacture, and provides a device which assures the opening of the package in the proper direction. When opened the contents are fully and readily available and when closed, the slide is yieldably held in closed position until access is again desired. If the user presses the slide in the proper direction it opens freely and readily, and thus assures that the package will be manipulated in the manner intended.

While the articles herein described constitute preferred embodiments of the invention, it is to be understood that the invention is not limited to these precise articles, and that changes may be made therein without departing from the scope of the invention which is defined in the appended claims.

What is claimed is:

1. A carton comprising a sleeve of uniform cross-section open at both ends and a slide having a bottom panel tapered from a wide end greater in width than the internal width of said sleeve toward a narrow end less in width than the internal width of said sleeve to provide for insertion of said slide into said sleeve with the narrow end foremost, side walls on said slide frictionally engaging said sleeve to yieldably retain said slide therein in the closed position thereof, and an end flap on said wide end having a greater width than the space between the adjacent end portions of said side walls, said end flap including an integral extension flap beveled to locate its terminal portion inwardly of and below the top edge of said side walls to avoid frictional resistance therefrom during the insertion and removal of said slide.

2. A carton comprising a sleeve of uniform cross-section open at both ends and a slide having side walls and a bottom panel tapered from a wide end greater in width than the internal width of said sleeve toward a narrow end less in width than the internal width of said sleeve to provide for insertion of said slide into said sleeve with the narrow end foremost and to yieldably retain said slide therein, a bottom extension flap narrower than and lying within said side walls to avoid frictional resistance during insertion of said slide into said sleeve, and an end flap of a width adapted to overlie said side walls at said wide end of said slide to restrain insertion of said slide

into said sleeve beyond the normal closed position of the carton.

3. A carton comprising a sleeve of uniform cross-section open at both ends and a slide having side walls and a bottom panel tapered from a wide end greater in width than the internal width of said sleeve toward a narrow end less in width than the internal width of said sleeve to provide for insertion into said sleeve with the narrow end foremost and to yieldably retain said slide therein, a bottom extension flap narrower than and lying within said side walls to avoid frictional resistance during insertion of said slide into said sleeve, an end flap adapted to overlie the side walls at said wide end of the sleeve to restrain insertion of said slide into said sleeve beyond the normal closed position of the carton, and a flap on said end flap of less width than said end flap but of greater width than the internal width of said sleeve adapted to overlie said side walls adjacent the wide end thereof providing for the rolling of the edges of said extension flap over said side walls in frictional engagement with said sleeve as the slide is moved to its closed position in said sleeve.

4. A carton comprising a sleeve of uniform cross-section open at both ends and a slide having a bottom panel tapered from a wide end greater in width than the internal width of said sleeve to a narrow end less in width than the internal width of said sleeve, opposite side walls integral with the tapered sides of said bottom panel to provide for wedging said slide in its closed position within said sleeve, a bottom end flap integral with the narrow end of said bottom panel, a bottom extension flap integral with said bottom end flap opposite said bottom panel, said bottom extension flap being narrower than the narrow end of said bottom panel and lying within said side walls to form a closed end for said slide, a top end flap wider than the wide end of said bottom panel and integral therewith, and a top extension flap integral with

said end flap opposite said bottom panel, said top extension flap having a width greater than the width of said sleeve to provide for rolling the edges of said top extension flap over said side walls at the wide end of said slide in frictional engagement with said sleeve.

5. A carton comprising a sleeve of uniform cross-section open at both ends and a slide for insertion in one direction only into said sleeve, said slide including opposite top and bottom panels each tapered from a wide end greater in width than the internal width of said sleeve to a narrow end less in width than the internal width of said sleeve, opposite side walls extending along the tapered sides of said panels, cooperating end flaps extending from the narrow ends of said panels to form a bottom end wall on said slide, a top end flap and a top extension flap extending from the wide end of said bottom panel, said top end flap having a greater width than the wide end of said bottom panel and said top extension flap being greater in width than the internal width of said sleeve but lesser in width than said top end flap to frictionally engage the inside of said sleeve, a recessed portion extending across the wide end of said top panel to afford access to the interior of said slide in open position and to be covered by said top extension flap in closed position.

References Cited in the file of this patent

UNITED STATES PATENTS

602,664	Munson	Apr. 19, 1898
893,551	Schmidt	July 14, 1908
1,606,493	Andrews	Nov. 9, 1926
1,815,855	Lauritano	July 21, 1931
1,906,742	Coulapides	May 2, 1933
2,006,591	Fox	July 2, 1935
2,634,854	Brandt et al.	Apr. 14, 1953

FOREIGN PATENTS

25,634	Great Britain	1908