(12) PATENT
(19) AUSTRALIAN PATENT OFFICE

(11) Application No. **AU 199863531 B2**
(10) Patent No. **741052**

(54) Title
Height adjustment or levelling apparatus

(51)[7] International Patent Classification(s)
F16M 011/28

(21) Application No: **199863531**

(22) Application Date: **1998.04.22**

(30) Priority Data

(31) Number	(32) Date	(33) Country
314660	**1997.04.23**	**NZ**

(43) Publication Date : **1998.10.29**
(43) Publication Journal Date : **1998.10.29**
(44) Accepted Journal Date : **2001.11.22**

(71) Applicant(s)
Fisher and Paykel Limited

(72) Inventor(s)
Stephen McLay McCutcheon

(74) Agent/Attorney
A J PARK and SON,Level 11,60 Marcus-Clarke Street,CANBERRA ACT 2601

(56) Related Art
FR 2437812
FR 1550240
EP 722681

Height Adjustment or Levelling Apparatus

Abstract

A mechanism for adjusting the height of at least a part of an item or article, for example a home appliance such as a refrigerator, dishwasher or laundry washing machine. The device (14) includes two parts (2, 3) and is adapted to replace at least a front foot of the item. A first part of the device (14) is an enlarged diameter thumb wheel (3) which is rotated by a user. The thumb wheel (3) is held within a captive nut (6) within the appliance thus rotation of the thumb wheel (3) increases or decreases the height of the appliance from the floor. The second part of the device (14) is a disk (2) which is held captive within the thumb wheel (3) but which is in contact with the floor. The materials selected and the geometry of the mating surfaces of the two components is chosen such that a low co-efficient of friction is produced between them.

S & F Ref: 417583

AUSTRALIA

PATENTS ACT 1990

COMPLETE SPECIFICATION

FOR A STANDARD PATENT

ORIGINAL

Name and Address of Applicant: Fisher & Paykel Limited
78 Springs Road
East Tamaki
Auckland
NEW ZEALAND

AUSTRALIAN PATENT OFFICE
REG
22.10 (2)

Actual Inventor(s): Stephen McLay McCutcheon

Address for Service: A.J. Park & Son, Level 11, 60 Marcus Clarke St, Canberra ACT 2601
~~Spruson & Ferguson, Patent Attorneys~~
~~Level 33 St Martins Tower, 31 Market Street~~
~~Sydney, New South Wales, 2000, Australia~~

Invention Title: Height Adjustment or Levelling Apparatus

The following statement is a full description of this invention, including the best method of performing it known to me/us:-

Height Adjustment or Levelling Apparatus

This invention relates to height adjustment or levelling mechanisms for equipment and more particularly though not solely to height adjustment or levelling mechanisms for home appliances such as refrigerators.

Modern levelling foot devices for home appliances, in addition to providing height adjustment of the appliance, increasingly include the addition of wheels or castors to allow the appliance to be moved. However, in order for the levelling foot device to be of benefit to the average household member, the mechanism must be readily accessible and easily adjusted. Early height adjustment mechanisms for home appliances simply consisted of a captive nut in the base of the front of the appliance into which a bolt could be wound (usually requiring a hand tool) to adjust the height (with the bolt head acting as a foot on the ground and rotation of the bolt head adjusting the distance between the head and the captive nut). This system usually requires one person to lift and hold the front of the appliance while a second person adjusts the height of the feet.

Improvements to the above system are disclosed in United States patent numbers US3,844,578 (Westinghouse Electric Corporation), US3,844,578 (Westinghouse Electric Corporation), US3,856,248 (Labelle), US3,858,270 (General Electric Company), US4,783,879 (White Consolidated Industries) and US5,215,367 (Amana Refrigeration Inc.). Each of the above mechanisms suffer from unnecessary complexity and/or difficulty of use (usually requiring hand tools for adjustment).

An example of a combination height adjustment and roller support mechanism for a refrigerator is disclosed in our New Zealand patent No.239676 published on 24 February 1995 (equivalent to Australian patent No.644541 issued 22 April 1994). The device described therein includes a rotatable hand wheel at the base of the front of the appliance which a user rotates by hand to adjust the height of the front of the

appliance (assisted by a fulcrum arrangement). However, it has been found that the user sometimes has difficulty in rotating the hand wheel due to the frictional coupling between the shaft of the hand wheel and its housing within the refrigerator cabinet.

It is, therefore, an object of the present invention to provide height adjustment apparatus for equipment which will go at least some way towards overcoming the above disadvantages or which will at least provide the public with a useful choice.

Accordingly, the invention consists in height adjustment apparatus for varying the height of at least a part of an item of equipment above a support surface, comprising:

fixed locating means which in use is mounted in a base of said item of equipment,

threaded shaft means, adapted to be received by said locating means so that relative rotation therebetween produces axial movement of said shaft means in relation to said base,

rotatable adjusting means having an end of said threaded shaft means fixed therein, a downwardly facing cavity bounded by a downwardly extending side wall, a first bearing surface in said cavity,

support surface contacting means housed substantially within said cavity and adapted to contact a support surface and including a second bearing surface within said cavity and contacting said first bearing surface to allow relative rotational movement between said rotatable adjusting means and said support surface contacting means, and a lower surface outside said cavity and below the lowest point of said rotatable adjusting means to contact a support surface, rotation of said rotatable adjusting means thereby adjusting the spacing between said at least part of said item of equipment and a support surface.

The invention consists in the foregoing and also envisages constructions of which the following gives examples.

One preferred form of the present invention will now be described with reference to the accompanying drawings in which;

Figure 1 is a perspective view from below of a refrigerator corner piece

AUSTRALIAN PATENT OFFICE

incorporating the height adjustment or levelling apparatus according to the present invention,

Figure 2 is a cross-sectional front elevation of the corner piece of Figure 1 including the height adjustment or levelling apparatus,

Figure 3 is a perspective view from above of the interior of the corner piece of Figure 1,

Figure 4 is a perspective view of the height adjustment or levelling apparatus shown in Figure 1 on its side, and

Figure 5 is another perspective view of the height adjustment or levelling apparatus shown in Figure 1.

With reference to the drawings, the height adjustment or levelling apparatus (generally referenced 14) according to a preferred form of the present invention is shown. With particular reference to Figure 1, a corner piece 1 of an appliance (not shown), for example a refrigerator cabinet (suitable for insertion into the lower corner of a refrigerator cabinet) is shown having a front wall 11, side wall 12 and base 13. A wheel 9 is fitted within a wheel housing 10 to allow the appliance to be easily transported when the wheel 9 is in contact with a support surface (not shown).

With reference also to Figure 2, the height adjustment or levelling apparatus includes a rotatable adjusting means or hand wheel 3 which is rotatable by a user and which is preferably moulded or otherwise manufactured from a plastics material such as NYLON. Hand wheel 3 is substantially "lid" shaped or cylindrical with a base 15 and circular side wall 16. Protruding from base 15 is a substantially convex or conically shaped protrusion 17, the surface of which defines a first bearing surface 7. Threaded shaft means 5, which may comprise a bolt has its head 18 embedded within protrusion 17 and its shaft 19 extending away from the base 15 of hand wheel 3 into the corner piece 1. The bolt head 18 is fixed such that rotation of hand wheel 3 also causes rotation of bolt 5. Side wall 16 of rotatable hand wheel 3 includes an annular,

inwardly directed lip 21 around the lower part of its inner surface. Alternatively (as shown) the lip could comprise a number of inwardly protruding wedge shaped lip means (8 are shown).

A support surface contacting means or footing disk 2 fits within the open side of hand wheel 3 and serves to bear at least part of the weight of the appliance (one height adjustment or levelling apparatus according to the present invention could be provided, for example, for each front corner of an appliance). Disk 2 has a smooth substantially convex outer surface which is adapted to contact the support surface (when the disk 2 is wound down to a level lower than the lowest point of wheel 9). Disk 2 is preferably moulded or otherwise manufactured from a plastics material such as ACETAL and also includes a substantially cylindrically shaped ring protrusion 23 on its upper side which is directed in use towards protrusion 17 on the base of hand wheel 3. The internal surface of ring protrusion 23 is substantially concave or conical in shape and defines a second bearing surface 8 which is adapted to contact the first bearing surface 7 in use. Due to the low co-efficient of friction between the two materials selected for the disk 2 and hand wheel 3, hand wheel 3 may be relatively easily rotated even when much of the weight of the appliance is being supported by the levelling apparatus. The ring protrusion 23 is preferably a close fit around the convex protrusion 17 which also ensures that the disk 2 is centred in the required position within the hand wheel 3.

In an alternative preferred embodiment, pad means 20 which may for example be a rubber pad, is attached to the lower surface of disk 2. Pad 20 would then be the only part of the levelling apparatus which contacts the support surface in use. Pad 20 would be advantageous as it would provide increased friction between the support surface and the levelling apparatus so that the appliance would not so easily slide on the support surface and rotation of the hand wheel 3 would not easily also rotate the disk 2. As shown, the pad 20 could be formed as a cap which fits over a circular

protrusion in the disk 2 in order to improve the connection between pad and disk.

At the outer edge of disk 2, an outwardly extending annular lip 22 is provided. Lip 22 and lip 21 engage to ensure that disk 2 is held captive within hand wheel 3. Insertion of disk 2 into hand wheel 3 is simply a matter of pressing the two parts together and providing sufficient force to flex the side wall 16 of the hand wheel outward and to flex the lip 22 of disk 2 inward to allow the lips to pass each other and then engage.

A thread cover piece 4 protrudes through the base 13 of corner piece 1 as may also be seen in Figure 3. Thread cover 4 provides a protective housing for bolt 5, especially in the case of the present invention being incorporated into a refrigerator cabinet which is to be filled with insulative foam.

A fixed locating means 6, which preferably comprises a threaded nut with an internal diameter and thread type suitable for fastening to bolt 5, is fixed to the corner piece 1 so that it is substantially immobile. In the preferred embodiment shown in the drawings, nut 6 is held captive within a section of thread cover 4, the thread cover also being immobile through its fixed connection to the corner piece 1.

In use, in order to install and then adjust the height of or level an appliance, a user simply ensures that the hand wheel 3 is fully wound in a clockwise direction (for a right handed threaded bolt and nut) so that hand wheel 3 and captive disk 2 are drawn towards the base 13 of the appliance so that wheel 9 contacts the support surface, and then positions the appliance appropriately. Height adjustment is then achieved by winding hand wheel 3 in an anti-clockwise direction until disk 2 (or pad 20) contacts the support surface and begins to take the weight of the appliance, lifting wheel 9 from the support surface. As more weight is taken up by the levelling apparatus of the present invention, disk 2 will tend not to rotate with respect to the support surface but relative movement between the first 7 and second 8 bearing surfaces will occur due to the lower frictional coupling developed between the two

materials. As the hand wheel 3 is rotated, bolt 5 will be withdrawn further from the appliance, increasing the displacement between the support surface and the base of the appliance as desired.

Due to the increased diameter of the hand wheel 3 and the construction and material choice of the height adjustment or levelling apparatus, the present invention is simple and convenient to use and allows for effortless height adjustment of relatively large and heavy appliances in comparison to the prior art.

CLAIMS:

1. Height adjustment apparatus for varying the height of at least a part of an item of equipment above a support surface, comprising:

fixed locating means which in use is mounted in a base of said item of equipment,

threaded shaft means, adapted to be received by said locating means so that relative rotation therebetween produces axial movement of said shaft means in relation to said base,

rotatable adjusting means having an end of said threaded shaft means fixed therein, a downwardly facing cavity bounded by a downwardly extending side wall, a first bearing surface in said cavity,

support surface contacting means housed substantially within said cavity and adapted to contact a support surface and including a second bearing surface within said cavity and contacting said first bearing surface to allow relative rotational movement between said rotatable adjusting means and said support surface contacting means, and a lower surface outside said cavity and below the lowest point of said rotatable adjusting means to contact a support surface, rotation of said rotatable adjusting means thereby adjusting the spacing between said at least part of said item of equipment and a support surface.

2. Height adjustment apparatus as claimed in claim 1 wherein said support surface contacting means comprise a disk having a substantially convex said lower surface adapted to contact said support surface and said rotatable adjusting means comprise a substantially lid shape having a base and said side wall, said support surface contacting means adapted to be housed substantially within said rotatable adjusting means with a part of said convex disk protruding from the open side thereof.

AUSTRALIAN PATENT OFFICE

3. Height adjustment apparatus as claimed in either claim 1 or claim 2 wherein an outer edge of said support surface contacting means is provided with a lip and the lower edge of said wall of said rotatable adjusting means is provided with a complementary lip such that said support surface contacting means is held captive within said rotatable adjusting means, said lip and said complementary lip engaging to hold said support surface contacting means within said rotatable adjusting means.

4. Height adjustment apparatus as claimed in claim 3 wherein said complementary lip comprises a number of lip protrusions spread around the inner surface of said side wall of said rotatable adjusting means.

5. Height adjustment apparatus as claimed in claim 1 or claim 2 wherein said fixed locating means are held in location in said base means by a thread covering sheath in which said threaded shaft means are axially movable.

6. Height adjustment apparatus as claimed in claim 1 or claim 2 wherein said first bearing surface comprises a convex shaped protrusion directed towards said support surface contacting means and said second bearing surface comprises a convex shaped receptacle to allow relative location of said support surface contacting means and said rotatable adjusting housing means.

7. Height adjustment apparatus as claimed in claim 1 or claim 2 wherein the materials from which said support surface contacting means and said rotatable adjusting means are formed is chosen so that the co-efficient of friction between said first and said second bearing surfaces is low.

8. Height adjustment apparatus as claimed in claim 7 wherein said support surface

AUSTRALIAN PATENT OFFICE

contacting means is made from Acetal and said rotatable adjusting means is made from NYLON.

9. Height adjustment apparatus as claimed in claim 1 or claim 2 wherein said height adjustment apparatus also comprise pad means attached to said support surface contacting means and adapted in use to contact said support surface.

10. A home appliance having a base, held above a support surface by at least one height adjustment apparatus as claimed in claim 1.

11. Height adjustment apparatus substantially as herein described with reference to and as illustrated in the accompanying drawings.

12. A home appliance substantially as herein described with reference to and as illustrated in the accompanying drawings.

AUSTRALIAN PATENT OFFICE

63531/98

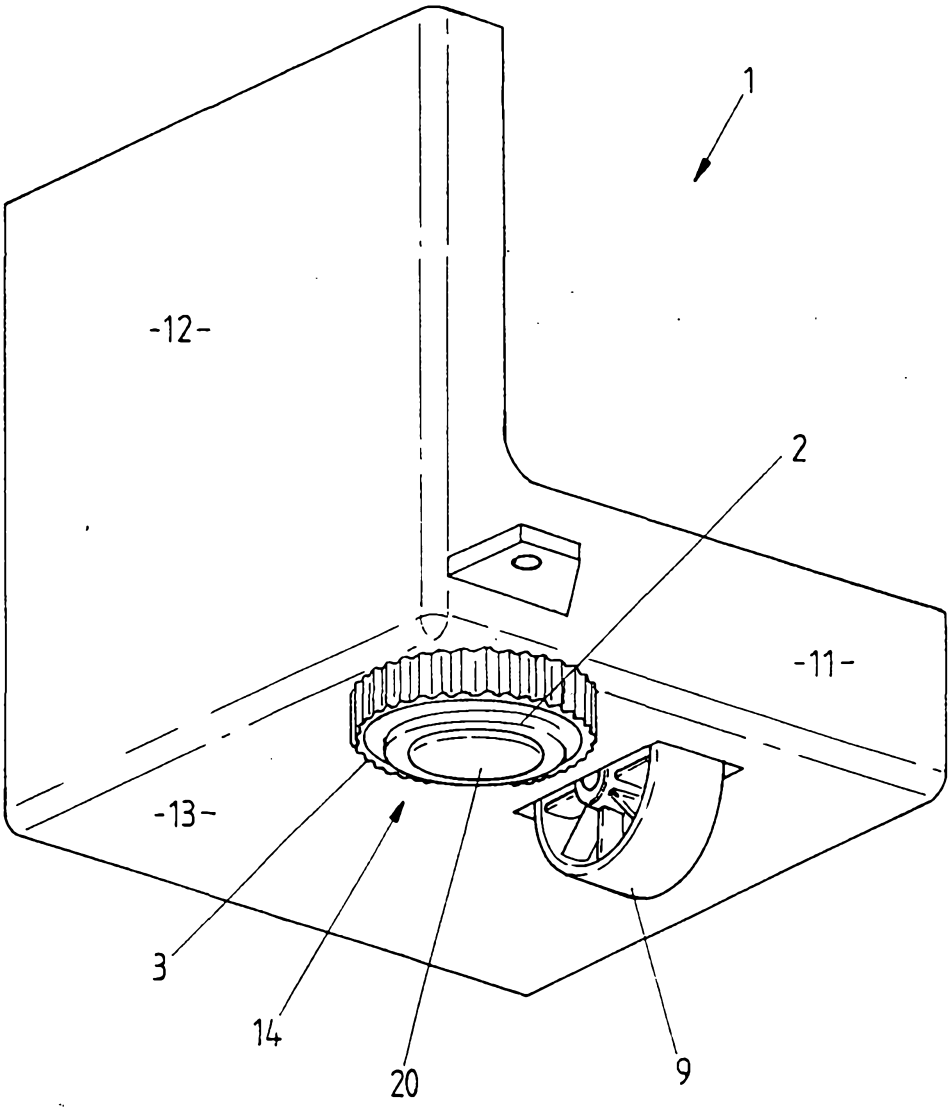

FIG. 1

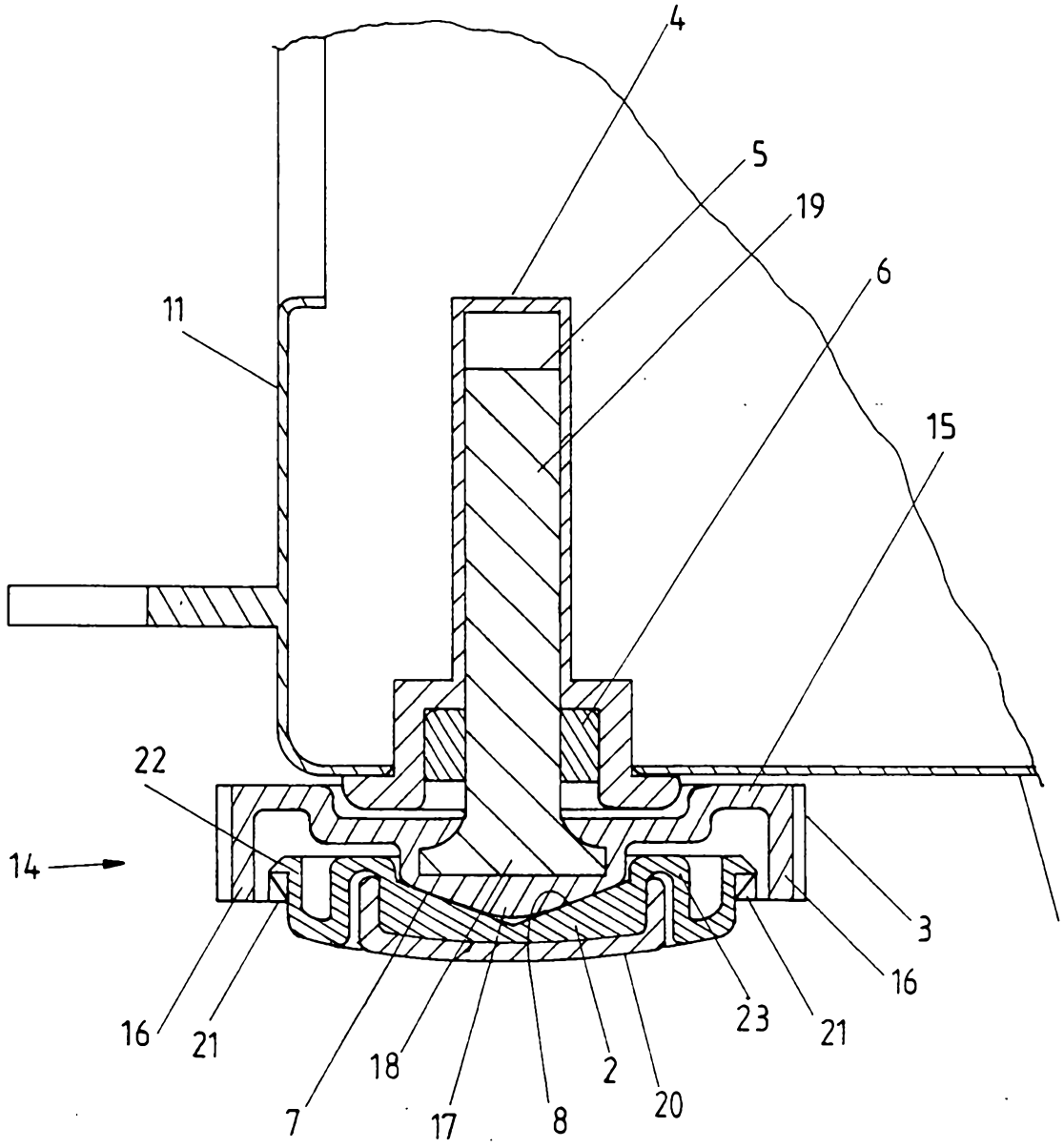

FIG. 2

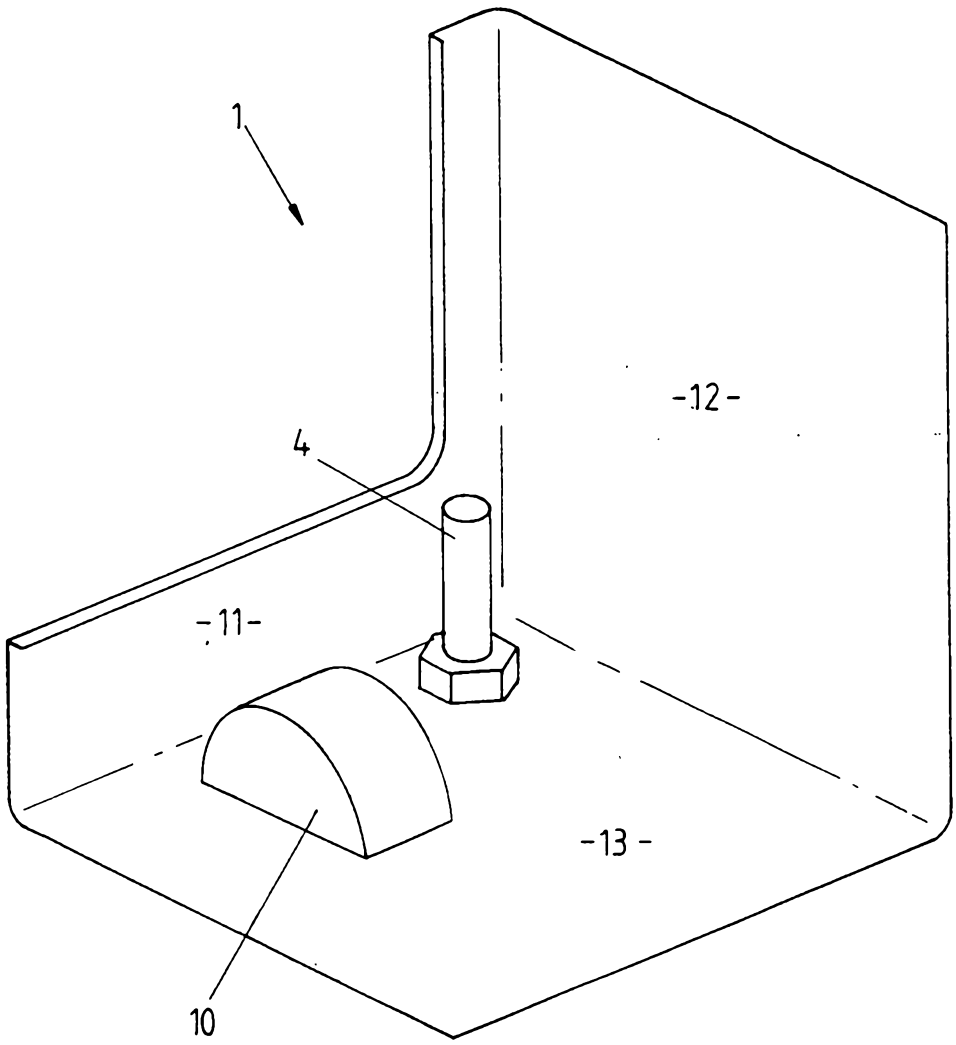

FIG. 3

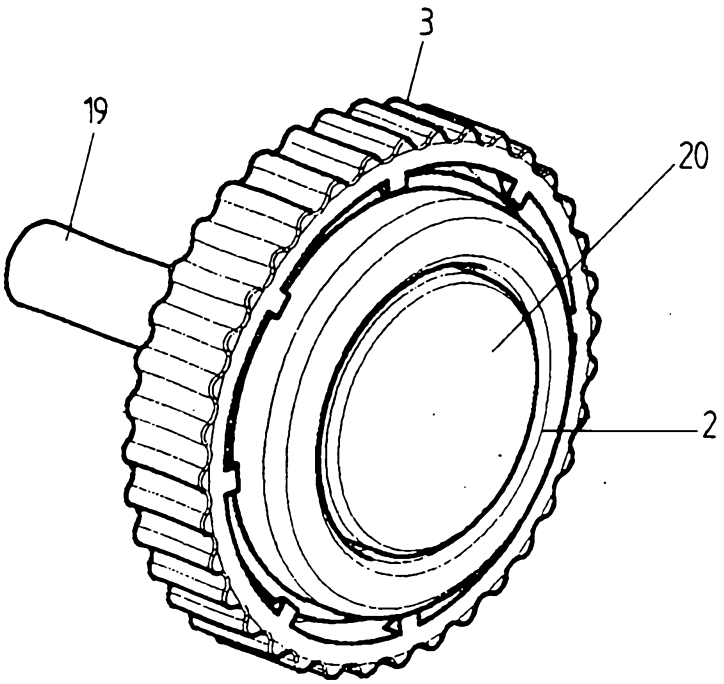

FIG. 4

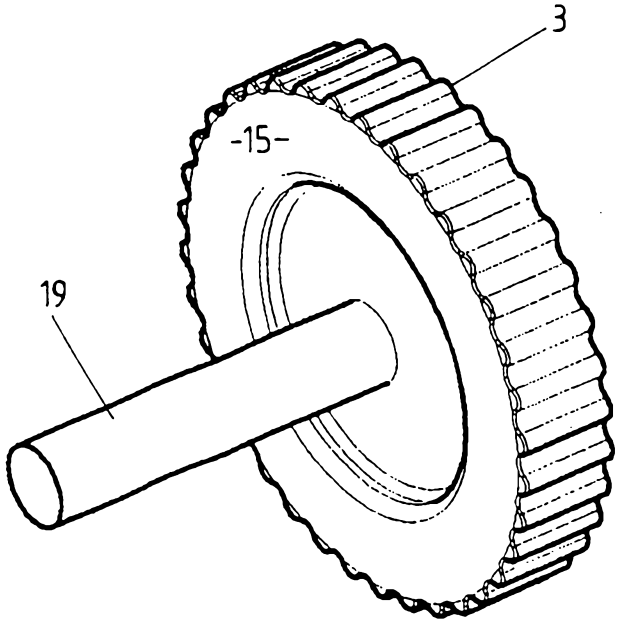

FIG. 5