Aug. 30, 1932. G. A. BARDET ET AL 1,874,854

MASTER VALVE MECHANISM FOR VACUUM SEALING MACHINES

Filed Feb. 7, 1928 2 Sheets-Sheet 1

Fig. 1

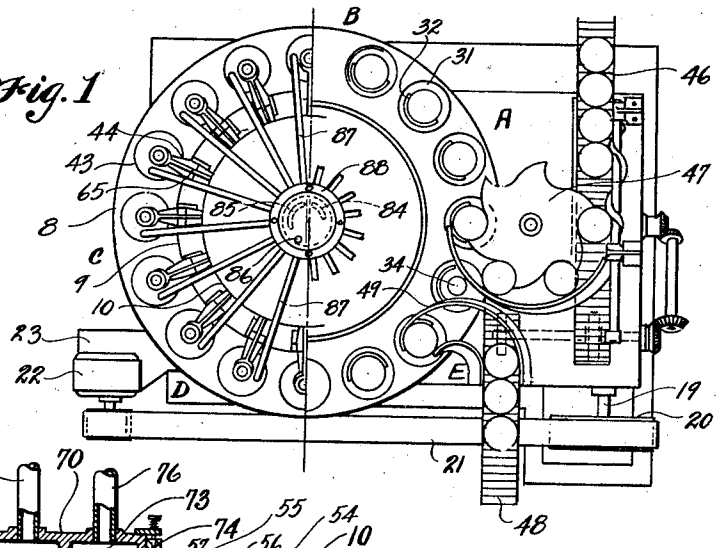

Fig. 2

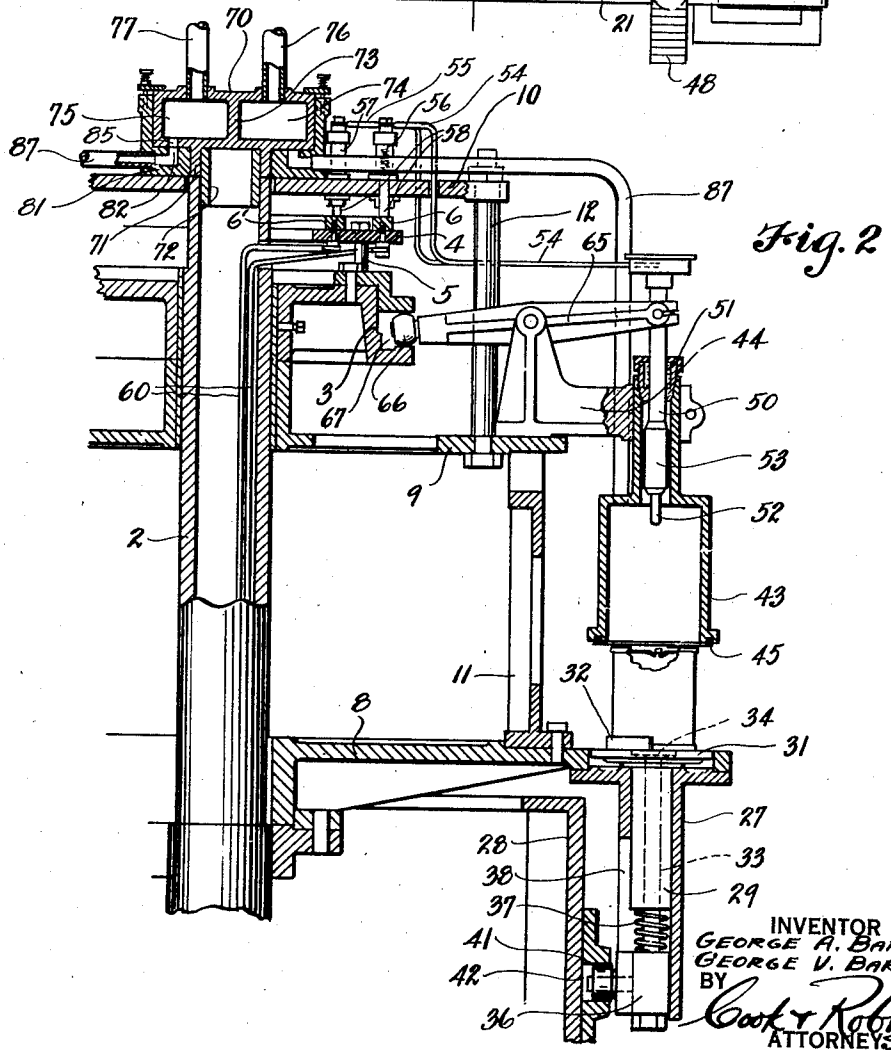

INVENTOR
GEORGE A. BARDET
GEORGE V. BARDET
BY
Cook & Robinson
ATTORNEYS

Aug. 30, 1932. G. A. BARDET ET AL 1,874,854

MASTER VALVE MECHANISM FOR VACUUM SEALING MACHINES

Filed Feb. 7, 1928 2 Sheets-Sheet 2

Fig. 3

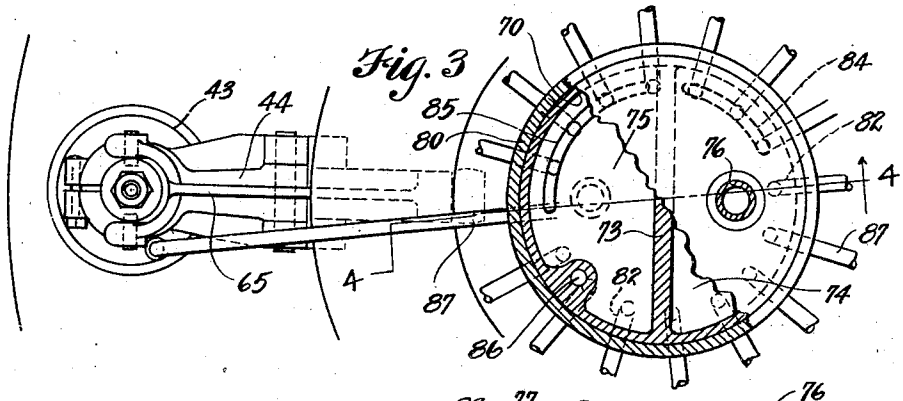

Fig. 4

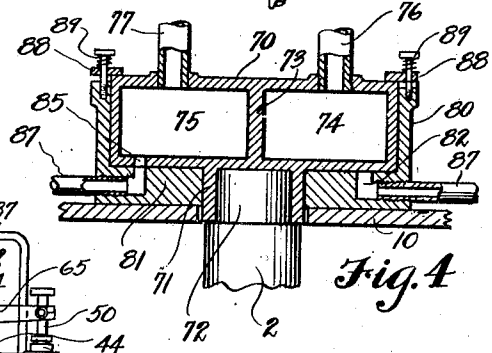

Fig. 5

INVENTOR
GEORGE A. BARDET
GEORGE V. BARDET
BY
Cook & Robinson
ATTORNEYS

Patented Aug. 30, 1932

1,874,854

UNITED STATES PATENT OFFICE

GEORGE A. BARDET AND GEORGE V. BARDET, OF BERKELEY, CALIFORNIA, ASSIGNORS TO M. J. B. CO., OF SAN FRANCISCO, CALIFORNIA, A CORPORATION OF DELAWARE

MASTER VALVE MECHANISM FOR VACUUM SEALING MACHINES

Application filed February 7, 1928. Serial No. 252,520.

This invention relates to improvements in machines for sealing vacuumized containers, and it has particular reference to machines of that character described and illustrated in U. S. Patent No. 1,531,018, issued on March 24, 1925, wherein a plurality of vacuumizing chambers are mounted on a rotary frame and within which vented cans may be placed for vacuumizing and sealing.

In the machine above referred to, all of the vacuumizing chambers have individual connections with a main vacuum chamber and for each chamber there are valves operable at proper times, first to effect and then, later, to release the vacuum. In the operation of the machine, cans to be vacuumized and sealed are delivered into the vacuumizing chambers as they are brought successively, by rotation of the machine, past a receiving station, then, as the chamber advances, it is closed tight and the valve in its connection with the vacuum chamber is opened so that all air will be extracted from the vacuumizing chamber and also from the vented can. Then, while still under vacuum, the can vent is sealed and finally the sealed can is discharged from the machine in such time that the chamber may receive another can therein when it again reaches the receiving station.

Machines of this type have proven very efficient in operation, but it has been found that where but one source of vacuum was employed and all the vacuumizing chambers were connected thereto, a fluctuation of vacuum occurs in all chambers connected to this main source each time a valve is opened for the vacuumizing of a newly charged chamber. This fluctuation sometimes causes the sealing metal, if it is still in molten state, to be blown off the can vent or its being sucked into the can, thereby rendering the seal ineffective and necessitating another sealing operation.

In view of the above undesirable result, it has been the principal object of this invention to provide means for preventing the occurrence of any fluctuation of vacuum in any of the chambers wherein sealing is being done regardless of the opening or closing of connections with other vacuumizing chambers.

More specifically stated, the object of this invention resides in the elimination of the two valve mechanisms heretofore used with each of the vacuumizing chambers and their operating devices, and in the substitution therefor of a master valve for all the vacuumizing chambers; this being provided with two separate, vacuumized compartments, the first of which is effective only for the initial vacuumizing of the chambers and the containers therein, and the other becomes connected with the chambers only after they have been vacuumized and disconnected from the first compartment, and its function is to maintain the vacuum previously created therein without fluctuation during the vent sealing operation.

Other objects of the invention reside in the various details of construction and the combination of parts and their mode of operatilon, as is hereinafter described.

In accomplishing these objects, we have provided the improved details of construction, the preferred forms of which are illustrated in the accompanying drawings, wherein—

Figure 1 is a plan view of a machine for vacuumizing containers, embodying a master valve mechanism constructed and applied in accordance with the present invention.

Figure 2 is an enlarged, sectional view of a part of the machine, showing one of the vacuumizing and can sealing units.

Figure 3 is a horizontal section through the master valve, showing also a connection with one of the vacuumizing chambers.

Figure 4 is a vertical section of the valve, taken on the line 4—4 in Figure 3.

Figure 5 is a vertical section through the machine in its axial line.

The machine as shown comprises a bed plate 1, on which a hollow shaft 2 is vertically mounted and to the upper portion of this shaft is fixed a cam track plate 3 upon which an insulator plate 4 is supported by a plurality of studs 5. On the insulator plate, two concentric contact rings 6—6′ are mounted.

At the lower end of the shaft 2, a thrust

bearing 7 is arranged and, resting on this and rotatably mounted on the shaft 2, is a rotary frame comprising horizontal elements 8, 9 and 10 connected by suitable vertical elements 11 and 12. Secured to the lower portion of the rotary frame and forming the bottom member thereof, is a bevel gear 13 driven by a suitable pinion 14 on the horizontal shaft 15, the outer end of which is provided with a worm wheel 16 inclosed within the casing 17. A worm 18, driven by the shaft 19, imparts motion to the worm wheel and, in turn, is driven by the pulley 20 fixed on the outer end of the shaft. The pulley 20 is connected by a belt 21 to a motor 22 mounted on a suitable bracket 23 arranged on the bed plate.

Fixed to the rotary frame, is a plurality of tubular brackets 27 which extend downwardly on the outside of the stationary, circular wall 28 mounted on the bed plate. Slidably mounted in each tubular bracket, is a shank 29 on the top of which is fixed the table 31 upon which the can to be operated on is placed, the fixed flange 32 serving to center the can on the table. A plunger 33, having the head 34 normally lying flush with the top of the table, is slidably arranged within the table's shank and, at the lower end, is fitted with a fixed block 36 between which and the lower end of the shank 29 the coiled spring 37 is interposed. The block 36 is formed with a side extension adapted to slide in the slot 38 formed in the inner side of the tubular bracket. Rotary movement of the plunger in the block and of the table on the plunger is prevented by suitable splines interposed between the parts. A roller 41, mounted on the block 36, engages in the cam track 42 fixed on the circular wall 28, and thus, by appropriate shaping of the cam track, vertical movement as desired may be imparted to the table and plunger.

Alined above each table 31, is an open bottom casing 43 rigidly mounted upon the rotary frame by means of a bracket 44. The lower edge of the casing is flanged and provided with a conformable gasket 45, and the purposes of the cam track 42 and the related parts are such that, at the desired time, table 31 is raised into sealed engagement with the gasket, thus tightly closing the casing; it being understood, of course, that the cams are of uniform size.

Means are provided for automatically seating cans upon the can tables during rotation of the rotary frame and for removing them from the machine upon completion of the vacuumizing and sealing operation. Briefly stated, the seating means comprises a conveyer belt 46 and a star wheel 47 which is synchronized to deliver cans from the belt onto the can tables, and the removing means consists of an outgoing conveyer belt 48 onto which cans are guided from the machine by contact with a guide plate 49.

It will be stated here that, in forming the can heads, the center of the upper head is slightly depressed and punctured, as shown in Figure 2. The puncture serves as a vent through which the air may be drawn from the interior of the can before the can is sealed in the vacuumizing chamber, and the depression serves as a recess to hold a piece of solder dropped thereon immediately prior to the entrance of the can into the machine.

Referring particularly to Figure 2, the tipping, or soldering iron, comprises a shaft 50 slidably mounted in the stuffing box 51 in the head of the casing 43. The lower end of the shaft is provided with a copper point 52 which is surrounded by a heating element 53 energized through suitable conductors which, in turn, are connected with leads 54 and 55 fixed to binding posts 56 and 57 on the plate 10. The lower ends of the binding posts are provided with brushes 58 which form contacts with the rings 6 and heavy, insulated conductors 60 leading upwardly through the hollow shaft 2 supply the rings with current. At the proper time in the sequence of operation, the tipping iron is lowered into contact with the solder on the can, fusing it over the vent, and is then immediately withdrawn. This is accomplished by means of a lever 65 pivotally mounted on the bracket 44 and pivotally connected to the shaft 50 of the tipping iron at one end and mounting a roller 66 at the other end. A cam track 67, fixed on the cam track plate 3, provides means for moving the lever at the proper time.

The means provided for vacuumizing the chambers after the cans have been placed therein and after the chambers have been closed, but prior to the sealing operation, is as follows: Located centrally above the machine, is a master valve through which all vacuumizing chambers are connected with a source of vacuum. This valve comprises a closed, inner housing 70, of cylindrical form, mounted coaxially upon the upper end of the shaft 2 just above the plate 10; the mounting means here shown consisting of a downwardly extending sleeve 71 formed on the bottom of the housing, that is fixed to an extension 72 of the shaft. The housing 70 is divided diametrically by a partition 73 to form two separate compartments, 74 and 75, which are connected, respectively, by pipes 76 and 77, with a source of vacuum of great volume. Fitted about the housing 70 so that it may revolve thereon, is a valve casing 80, of cylindrical form, having its wall portions overlapping the cylindrical wall portions of the inner housing 70 in a close joint and having a base portion 81 underlying the housing 70 and fixed to the plate 10 so that this casing revolves with the revolving frame of the machine. Formed in this base portion 81, at equally spaced intervals, and correspond-

ing in number tc the number of vacuumizing chambers in the machine, are radially directed channels 82 which, at their inner ends, are directed upwardly and open to the inner face of the base 81 at equal distances from the axial center of the valve, so that, as the valve casing revolves, these openings will be brought successively into registration with arcuate slots 84 and 85 formed, respectively, in the bottom wall portions of the chambers 74 and 75, and then into registration with an air inlet port 86 formed vertically through the housing 70. Leading from the outer ends of the channels 82, are pipes 87 which connect with the various vacuumizing chambers provided by the casings 43. The pipes 87 enter these casings 43 at the top, as shown in Figure 2. An oil seal may be provided between the stationary and rotating valve parts to prevent any possible leakage, and these parts may be held together by any suitable means, such as by the placing of an iron ring 88 over the two parts and bolting the ring to the revolving parts with spring tensioning devices 89 holding the stationary part in the oil seal.

In operation, the incoming cans, which, it is understood, have been packed, the heads seamed on and with a vent in the upper head of each, are supplied by any desired means with a small quantity of solder and flux before they reach the star wheel which operates to deposit a can on each table as the rotary frame revolves. As a can reaches the point A in Figure 1, the table is raised into contact with the lower edge of its corresponding vacuumizing chamber to seal the latter. After the chamber has thus been sealed, the inner end of the channel 82 in the valve casing 80, with which the tube 87 leading from this particular chamber connects, is brought into registration with the valve slot 84 and, in this way, connection is provided, through the chamber 74 of the master valve and the pipe 76, with the source of vacuum. The chamber and can are thus vacuumized and the container is ready for sealing. Further rotative movement of the machine and the valve casing brings the channel 82 into registration with the slot 85 in the bottom wall of the compartment 75 and thus connection is maintained with the source of vacuum through this compartment and the pipe 77. During the time the channel 82 travels from the final end of slot 84 to the final end of slot 85, that is, through the interval designated from B to C in Figure 1, the sealing operation takes place by actuation of the soldering iron downwardly against the piece of solder carried on the can top which causes the solder to melt and cover the vent in the can end. The fused solder is then given a short cooling interval with no fluctuation in degree of vacuum and, when the can has progressed to the position designated at D in Figure 1, the channel 82 comes into registration with the intake port 86 through the housing 70 which permits air to rush into the vacuumized chamber. The can then begins its return to lowered position and, at the position E, is caught by the guide 49 and diverted to the outgoing conveyer.

It is to be pointed out here that by providing the machine with a master valve of this character, having the two separate compartments each connected with a source of vacuum of great volume and with which the vacuumizing chambers are caused, as the machine rotates, to be successively connected, the previously noted damage done to the solder before it has cooled by fluctuation of vacuum in the sealing chambers is overcome; this being due to the fact that the chambers 43 are completely vacuumized through their connection with the first compartment of the master valve and this state of vacuum is maintained by connection with the second compartment. Fluctuation of vacuum will occur, of course, in the compartment 74 by reason of the fact that air filled chambers are being brought regularly into communication with it, but sealing of the containers does not take place while the chambers are in communication with compartment 74 but only after they have been cut off from this compartment and brought into communication with the second compartment. No fluctuation of vacuum will occur in this second compartment for the reason that the chambers are completely vacuumized by the time they are brought into communication with it.

It is to be understood that a master valve of this character can be used with various types of rotary machines whether or not they use the same type of sealing or soldering mechanism. For this reason, it is not desired that our claims be confined to the use of a valve of this character only with that particular mechanism with which it has been described.

Having thus described our invention, what we claim as new therein and desire to secure by Letters Patent, is:

1. A vacuumizing machine comprising a plurality of vacuumizing chambers, a source of vacuum and a master valve for timing the application of vacuum from the source to each of the vacuumizing chambers.

2. A vacuumizing machine comprising a plurality of vacumizing chambers, a source of vacuum and a master valve for timing the application of vacuum from said source to each of the vacuumizing chambers and releasing of the vacuum therefrom.

3. A vacuumizing machine comprising a plurality of vacuumizing chambers, a source of vacuum, means for sealing cans while contained in said chambers under vacuum and a

master valve operable to time the application of vacuum from the said source to all of said chambers.

4. In a machine of the character described, a plurality of vacuumizing chambers, means for sealing containers within said chambers under vacuum, a source of vacuum and a master valve connected with said source and with the several chambers for timing the application of vacuum and adapted to preclude any inter-communication, through the vacuumizing connections, between those chambers wherein sealing is in progress and those wherein vacuumization is being effected.

5. In a machine of the character described, comprising a plurality of vacuumizing chambers within which vented containers may be placed for sealing and means for sealing the containers while located in the chambers under vacuum, a source of vacuum and a master valve for timing the application of vacuum to and its release from the chambers and whereby the chambers in which the sealing operation is being carried on are disconnected from those wherein vacuumization is being effected and those which are open to atmosphere.

6. A machine of the character described comprising a plurality of vacuumizing chambers and means for sealing vented cans while contained in said chambers under vacuum, a source of vacuum and a master valve connected with said source of vaccum through which all chambers may be vacuumized and whereby each chamber, after being vacuumized and during the sealing operation, is caused to be disconnected from those chambers wherein vacuumizing is taking place.

7. A machine of the character described comprising a plurality of vacuumizing chambers and means for sealing vented cans while contained in said chambers under vacuum, a source of vacuum and a master valve connected with the said source of vacuum and individually with each of the said chambers and comprising separate vacuumized compartments with which the chambers are successively connected, first for effecting their vacuumization and then for maintaining this vacuum during the sealing operation.

8. A machine of the character described comprising a plurality of vacuumizing chambers, means for sealing vented cans while contained in said chambers under vacuum, a constant source of vacuum and a master valve for timing the vacuumization of the chambers and comprising separate compartments individually connected with the source of vacuum and a member associated therewith operable to connect the chambers, first with one of said compartments to effect vacuumization of the chamber, and then with the other compartment to maintain the vaccum during the sealing operation.

9. In a machine of the character described, comprising a plurality of vacuumizing chambers, a constant source of vacuum and a master valve for timing the application of vacuum to the chambers, comprising a closed housing provided with two separate compartments individually connected with the source of vacuum and a movable member providing an individual connection with each of the vacuumizing chambers and which is movable to successively connect the chambers, first with one of said compartments for vacuumizing, and then with the other for maintaining the vacuum, and means operable to seal the cans while their chambers are in communication with the second of said compartments.

10. A machine of the character described comprising a plurality of vacuumizing chambers, a constant source of vacuum, a master valve for timing the application of vacuum to and its release from said chambers, comprising a stationary housing provided with two separate compartments individually connected with the source of vacuum, and a casing fitted thereon through which individual connections are made with each of the vacuumizing chambers and which is movable to successively connect the chambers, first with one of said compartments to effect vacuumization, and then with the other compartment to maintain the vacuum, and means for tipping the cans in the chambers during the periods of connection of said chambers with the second of said compartments.

11. In a machine of the character described, a rotary frame, a plurality of vacuumizing chambers carried thereby wherein vented containers may be sealed while held under vacuum, a constant source of vacuum, a master valve for timing the application of vacuum and its release from the said chambers, comprising a stationary housing provided with two separate compartments having individual connections with the source of vacuum and a casing rotatable thereon with the frame and having channels therein connected individually with each of said chambers and adapted, by rotation of the casing, to be brought successively into communication, first with one of said compartments to effect vacuumization of the chambers, and then with the other to maintain the vacuum, and means operable to seal the cans while the chambers are in connection with the second compartment of the valve.

12. In a machine of the character described, a rotary frame, a plurality of vacuumizing chambers carried thereby wherein vented containers may be sealed while held under vacuum, a constant source of vacuum, a master valve for timing the application of vacuum and its release from said chambers, comprising a stationary, cylindrical housing provided with two separate compartments having slots therein and individually connected with the

source of vacuum, a casing fitted to said housing to revolve thereon with the frame; said casing being provided with channels connected individually with the vacuumizing chambers and adapted, on rotation of the casing to be brought successively into registration with the slots of said vacuumized compartments of the housing, and means for sealing the cans in said chambers while the latter are in communication with the vacuum reached compartment.

13. In a machine of the character described, a rotary frame, a plurality of vacuumizing chambers carried thereby wherein vented containers may be sealed while held under vacuum, a constant source of vacuum, a master valve for timing the application of vacuum to and its release from the said chambers, comprising a stationary housing provided with an exhaust port therethrough and two separate compartments having individual connections with the source of vacuum and a valve casing rotatable thereon and having channels therein connected individually with each of said chambers and adapted, by rotation of the casing, to be brought successively into communication, first with one of said compartments to effect vacuumization of the chambers, then with the other to maintain the vacuum, and finally into registration with the inlet port to release the vacuum, and means for sealing the cans in the chambers while the latter are in communication with the second of said compartments.

Signed at San Francisco, California, this 30th day of January, 1928.

GEORGE A. BARDET.
GEORGE V. BARDET.