Sept. 3, 1968 K. G. LUSHER 3,399,611

ELECTRICAL PRINTING METHODS AND APPARATUS

Filed Oct. 23, 1965 2 Sheets-Sheet 1

FIG. 1

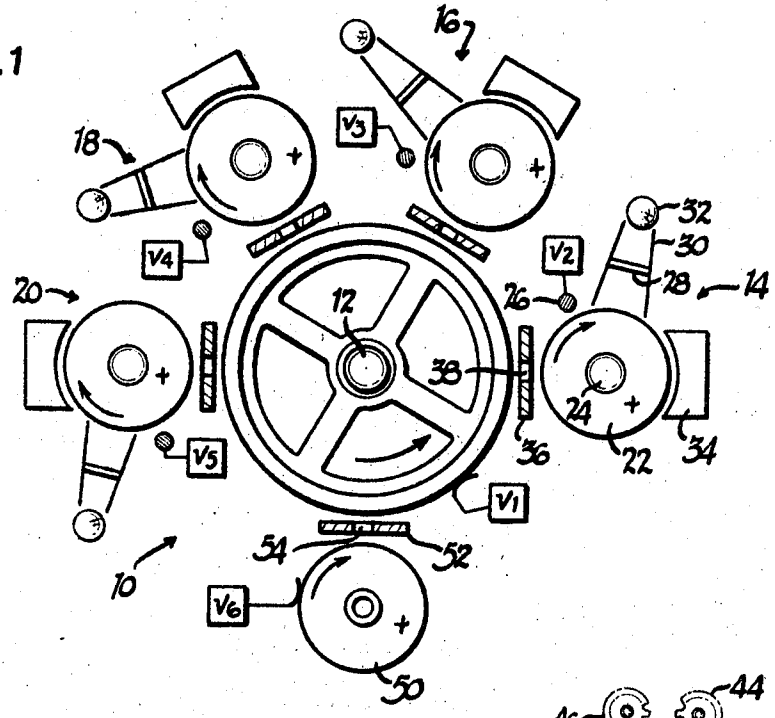

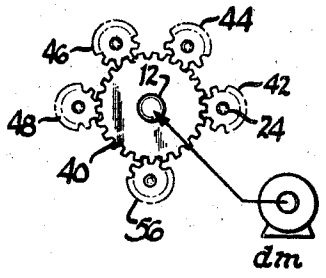

FIG. 3

FIG. 2

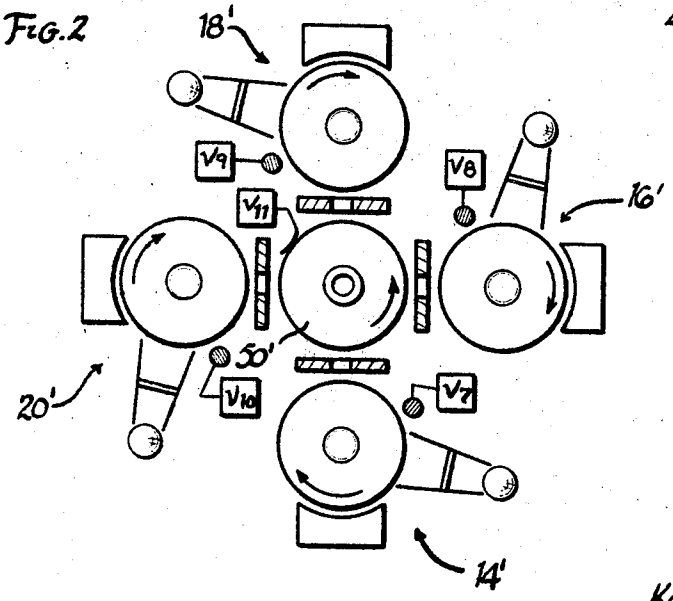

INVENTOR.
Kenneth G. Lusher
BY J. R. Nelson and
W. A. Schenck
ATTORNEYS

Sept. 3, 1968 K. G. LUSHER 3,399,611

ELECTRICAL PRINTING METHODS AND APPARATUS

Filed Oct. 23, 1965 2 Sheets-Sheet 2

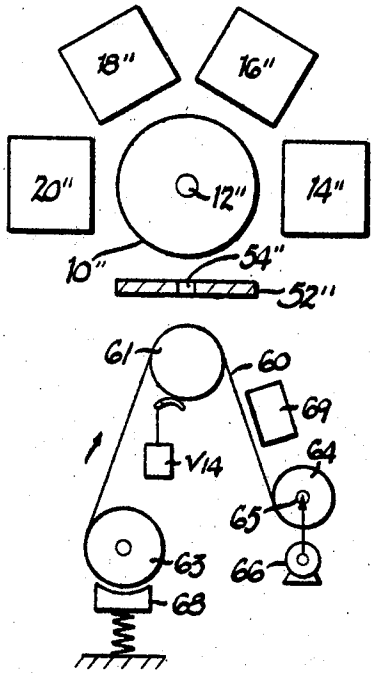

FIG. 4

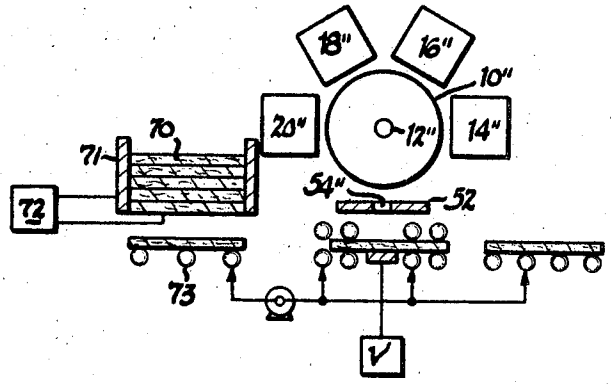

FIG. 5

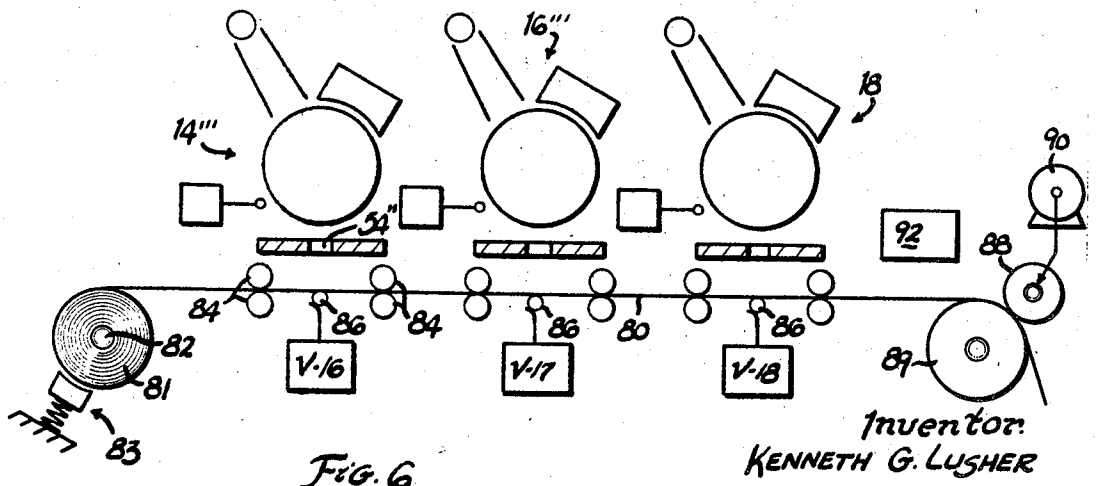

FIG. 6

Inventor:
KENNETH G. LUSHER

J. R. Nelson and
W. A. Schenck
ATT'YS.

United States Patent Office 3,399,611 Patented Sept. 3, 1968

3,399,611

ELECTRICAL PRINTING METHODS AND APPARATUS

Kenneth G. Lusher, Perrysburg, Ohio, assignor to Owens-Illinois, Inc., a corporation of Ohio

Filed Oct. 23, 1965, Ser. No. 503,280
12 Claims. (Cl. 95—1.7)

ABSTRACT OF THE DISCLOSURE

The invention relates to an electrical printing process and apparatus for printing multicolor images of a powdered ink onto an article surface. This is achieved by placing electrical charges on the surface of individual drums by use of a shield and light source corresponding to the image for each color to be applied. The individual color powder is next applied to each of these drums to form the single color image on each. The individual color images are next electrically transferred in a desired order onto the article surface to form the multicolor image. This may be achieved by various means, represented by the various embodiments in the disclosure. They are:

(1) To electrically transfer the individual color images on the drums one at a time and in sequence onto a master drum to form a negative of the final image thereon. From the master drum the composite multicolor image is electrically transferred to a positive final multicolor image on the article surface. This utilizes off-set printing technique.

(2) To electrically transfer the individual color images on the drums one at a time and in sequence onto the cylindrical surface of an article to form the final multicolor image. This utilizes direct printing technique.

(3) To electrically transfer the individual color images on the drums one at a time and in sequence onto a traveling web surface, the drums being spaced along the direction of movement of said web. This utilizes direct printing.

In each of the foregoing, the powder image is transferred from each of the individual color drums through a narrow slit-like aperture onto the next surface.

This invention relates to electrical printing processes and apparatus, and more particularly to methods and apparatus for electrically applying multicolored images to surfaces.

The invention is especially concerned with the so-called dry printing processes in which an image is formed by applying powdered ink, glass frits or other relatively dry finely divided powder like particles, capable of being electrically charged, to an article surface by means of an electric field. A typical example of such a process is the well known xerographic process in which a drum or plate, having a layer of photoconductive insulating material, is electrically charged and exposed through a positive image film to form locally charged areas of the surface corresponding in shape to the desired image. Electrically charged powdered particles are then attracted to the surface on the charged areas and subsequently transferred from the drum or plate to the surface of the article to be printed by bringing the article into contact or close proximity to the drum or plate and establishing an electric field which attracts the particles from the drum or plate to the article surface.

In the application of an image to the surface of a cylindrical article by an electrical transfer process an inherent problem is present in that the lines of force of an electric field extend radially from a cylindrical surface and diverge from each other. This creates a curvature of the lines of force in an electric field extending

from a cylindrical surface to an adjacent flat plate or another cylindrical surface. Because the powder particles being transferred through an electric field tend to follow the path of the lines of force, image distortion and non-uniform density of images can occur.

It is one object of the present invention to provide methods and apparatus for electrically applying multicolor images of printing powder particles to the surfaces of an object to achieve minimum distortion and maximum uniformity of density in the applied image.

It is another object of the invention to provide methods and apparatus for applying accurately registered multicolor images of printing powder particles to the surface of an object.

It is another object of the invention to provide methods and apparatus for applying accurately registered multicolor images of printing powder particles to glass cylinders or to a web, such as paper over a cylinder, or to a web, such as paper, directed in a straight line, or to flat pieces, such as box blanks.

Other objects and features of the invention will become apparent by reference to the following specification and to the drawings.

In the drawings:

FIGURE 1 is a schematic diagram of one form of the present invention;

FIGURE 2 is a schematic diagram of a modified form of the invention;

FIGURE 3 is a schematic diagram of an exemplary drive train for the apparatus of FIGURE 1;

FIGURE 4 is a schematic diagram of a web printer over cylinders;

FIGURE 5 is a schematic diagram of a sheet printer for box blanks; and

FIGURE 6 is an in-line web printer or sheet printer.

Referring to the drawings:

Referring first to FIGURE 1, a cylindrical metal drum, designated generally **10** is fixedly mounted on a central shaft **12** for rotation about a fixed axis. Disposed about the periphery of drum **10** are a series of xerographic image transfer stations designated generally **14**, **16**, **18**, and **20**. Each of the stations **14**, **16**, **18** and **20** is basically similar, and the following description of a station **14** is equally applicable to stations **16**, **18** and **20**.

At station **14**, a cylindrical drum **22** is secured to a shaft **24** for rotation about a fixed axis which extends parallel to the axis of shaft **12**. Drum **22** is coated with a photoconductive insulating material, such as selenium, such coatings being well known in the xerographic art. As shown in FIGURE 1, drum **22** is driven in rotation in a clockwise direction so that a point on the surface of the drum is advanced past a charging wire **26** and then into alignment with an image exposure station at which a film having a positive image is supported at **28** within a light shield **30** so that the positive image may be projected as a shadow upon th surface of drum **22** by an exposure light **32**. After being exposed, the surface of drum **22** becomes locally charged in the shaded area of the exposed image, while the parts exposed to light lose their charge. The surface portion having the locally charged image thereon is then rotated past a powder supply schematically illustrated at **34** in which powder particles are cascaded across the locally charged region on drum **22** or applied to the drum surface by other conventional techniques. The particles cling to the drum in the charged areas, thus forming a layer of particles on the drum surface in the shape of the shaded portions of the image of the film supported on film support **28**. The powder image is then transferred to the surface of the central or master drum **10** by charging the surface of drum **10** to an opposite electric potential as by means of the voltage source schematically illustrated at V–1.

In order to eliminate any distortion in the applied image, an electrically neutral shield **36** is positioned between master drum **10** and drum **22** and is formed with a slit-like aperture **38** which extends parallel to the axis of drums **10** and **22** and which is centered upon a plane containing the axis of shaft **12** and shaft **24**. Slit **38** is relatively narrow in the direction tangential to the surfaces of drums **10** and **22**, and is located at the point where the drum peripheries are at their closest approach to each other. The relatively narrow tangential extent of slit **38** confines the transfer of powder particles to a relatively narrow region where the lines of force of the electric field extending between the drum surfaces are substantially straight and parallel to each other. By rotating drum **10** and drum **22** in opposite directions of rotation at the same peripheral speed, the powder layer defining the image of drum **22** is scanned by slit **38** and is transferred through the slit during the scanning operation. Because the surfaces of the respective drums are moving at the same peripheral speed, within the relatively narrow region defined by slit **38**, there is substantially no relative movement between the two drum surfaces, and the image is transferred in substantially the same manner as if the two drum surfaces were flat stationary plates.

In the apparatus of FIGURE 1, four image transfer stations **14**, **16**, **18** and **20** are provided. With four transfer stations, it is possible to apply a four-color image to the surface of central or master drum **10**. The four image transfer stations differ from each other in that the powder supplies associated with the respective stations are stocked with different colored powder, and the film employed at the different stations exposes the drum to form the individual single color image portions on the respective drums. For example, if the desired multicolored image is to have black, red, white and green portions, powder supply **34** would be stocked with black powder and the film supported in film holder **28** would have a shaded portion corresponding only to the black portions of the completed image. Similarly, the powder supply associated with station **16** would be stocked with red powder particles and the film employed at station **16** would be darkened only in the red regions of the completed image. Stations **18** and **20** would be respectively stocked with white and green powders and film shaded in areas corresponding respectively to the white and green colored portions of the final image.

Accurate registration of the respective colored portions of the final image to be applied to master drum **10** is achieved by synchronizing the rotation of master drum **10** with those of the drums associated with the respective image transfer stations. This may be accomplished in one way by a gearing arrangement of the type illustrated in FIGURE 3 in which a gear **40** coupled to the shaft **12** is meshed directly to gears **42**, **44**, **46**, **48** which directly drive the respective shafts of the drums of stations **14**, **16**, **18** and **20**. By proportioning the gears to the respective drum diameters, the desired equal peripheral speeds can be readily obtained, and the direct meshing contact insures the correct directions of rotations. Registration of the respective images applied at the various stations is achieved by angularly adjusting the respective stations to each other, so that a given point on the periphery of drum **10** moves into registry with each station at the correct point in the cycle of rotation of the drum at that particular station. Thus, at the point in time where an image portion is being transferred to drum **10** from station **14**, the drum at station **16** might be at that point in its cycle where the powder is being applied to the drum, and the image at station **18** might be at the same time be at the exposure point in its cycle. Once this initial adjustment is made, the direct gear connection accurately maintains registry.

In the FIGURE 1 embodiment, master drum **10** acts as an offset plate and the complete four-color image is transferred to the surface of a cylindrical article **50** which is supported for rotation about an axis parallel to that of shaft **12**. A shield **52** having a slit **54** parallel to and aligned with the axis of rotation of drum **10** and article **50**, is located between the periphery of the article and the surface of drum **10**. The complete image is transferred by electrically charging the article surface as by a voltage source V–6 to an electric potential opposite that of drum **10**. The completed image is transferred from drum **10** to the article surface in the same fashion, but in a reverse direction, as the single color portions of the image are applied to drum **10** at the respective transfer stations. Article **50** may, as indicated in FIGURE 3, be supported by a platform driven by a gear **56** directly in mesh with the central gear **40**.

In FIGURE 2, there is shown a modified form of the invention in which the single color portions of a multicolor image are applied directly to the article surface, instead of first forming a completed mirror image upon the surface of drum **10** for subsequent transfer to the article as in the FIGURE 1 embodiment. In FIGURE 2, four image transfer stations **14'**, **16'**, **18'** and **20'** are symmetrically located about the periphery of an article **50'** to be decorated. Image transfer stations **14'**, **16'**, **18'** and **20'** are identical with the image transfer stations **14**, **16**, etc. of the FIGURE 1 embodiment, each station being set up to apply one color portion of a four color image. In the FIGURE 2 embodiment, the article **50'** to be decorated is supported for rotation about its axis with the axes of the drums of stations **14'**, **16'**, **18'** and **20'** extending paraxially or in parallel relationship to the axis of rotation of the article. As in the previous case, a direct gear drive similar to that shown in FIGURE 3, may be employed to drive the articles and drums in rotation in the respective directions indicated by the arrows in FIGURE 2 at the same peripheral speed. The basic difference is that in the FIGURE 2 embodiment, the individual powder image portions are applied to the drums of the transfer stations in mirror form or in the reversed sense, while in the FIGURE 1 embodiment, the image portions as applied to the respective drums of the transfer stations are applied in their normal sense, mirrored upon transfer to drum **10**, and subsequently again reversed during the transfer from drum **10** to the article.

A further embodiment is shown diagrammatically on FIGURE 4 for utilizing the invention in printing on continuous sheet or web material. This apparatus operates similarly to the apparatus of FIGURE 1, described above, except the image is printed upon a web of paper or other sheet material **60**. For simplicity of illustration, the image transfer stations are shown only schematically at **14''**, **16''**, **18''** and **20''**. The images are produced in the same manner and by different color powder supplies as earlier described, and registration of images may be obtained by the techniques disclosed herein for FIGURE 1.

The master drum **10''**, functioning as an offset plate, has the multicolor image transferred to its surface. The drum **10'** rotates past the shield **52''** bearing the transfer slit **54''** parallel to and aligned with the axis of the shaft **12''** and the axis of a shaft **62** rotatably supporting a guide roll **61**. The shield **52''** is positioned between the drum **10''** and the roll **61** in spaced orientation and the surface of the articles to be printed, in this case a web of material **60** such as paper, is reeved over the roll and moved in synchronous fashion over the periphery of roll **61** and past slit **54**. The paper web is supplied as roll stock on FIGURE 4 mounted on the feed roll stand **63**. The web, in passing over the conducting roll **61**, herein called the electrode, then passes on to a takeup roll **64** for moving the paper past the slit **54''** at a controlled speed. The shaft **65** of the takeup roll **64** is driven synchronously with the speed of the shaft **12''** as was shaft **56** in the FIGURE 1 embodiment (see FIGURE 3) for synchronizing movement of the surface of the article being printed. The takeup roll may be driven by other conventional synchronous drive means of an electrical embodiment such as a motor

66 electrically synchronized with the drive of drum 10''. The web of material 60 may be properly tensioned by a spring loaded brake shoe device 68 shown schematically on FIGURE 4.

The image formed on the surface of the drum 10'' is transferred by electrically charging the electrode roll 61 by a voltage source V–14 to an electric potential opposite that of drum 10''. The image transfer station 14'', etc. shown in FIGURE 4 are operated as earlier described in connection with FIGURE 1 to apply the image of each color onto the face of the drum 10'' in succession. A fixing station 69 is employed, if necessary, to fix the image.

Another mechanical embodiment of FIGURE 5 illustrates a modification of the FIGURE 4 apparatus for printing on flat surfaces, such as corrugated box blanks 70.

The blanks 70 are piled in a hopper structure 71 provided with a known knocker bar 72 which is cyclically operated in timed synchronous fashion to feed blanks onto the receiver rollers 73. The rollers are connected to a drive for synchronized movement with the image transfer apparatus.

As each box blank 70 is progressively fed in succession under the slit 54'' of the shield 52'' and the image is transferred from the master drum 10'' by the techniques described previously, the electric field being established between electrode 74 and the surface of drum 10'', the image is placed on the drum 10'' by the multicolored units 14'' etc. in the manner described earlier.

In FIGURE 6, another embodiment is shown for printing a flat surface. In this embodiment, three image transfer units 14''', 16''', and 18''' are located in a linear alignment opposite a carriage or conveyance for a web of material 80. These units may be arranged for the basic color powders green, red and magenta. A fourth unit for black may be added. The web may be furnished from a supply roll 81 rotated on a shaft 82 and tensioned by a brake device, illustrated schematically at 83. The web is fed past the first station 14''' through insulated nip rolls 84, and over an intermediate electrode roll 86 opposite slit 54'''. Intermediate roll 86 is made of a metallic electrically conductive material or semi-conductor and is connected to a source of electrical potential V–16. Each of the units 14''', 16''' and 18''' are constructed alike and have the corresponding parts and motive operations described earlier as sub-assemblies in the FIGURE 1 embodiment.

Opposite each of the printer units 16 and 18 are insulated rolls 87 and the intermediate conductive electrode roll 86 respectively connected to the sources of electrical potential V–17 and V–18.

After unit 18, a drive roll 88 and an idler 89 are mounted. The drive roll 88 is connected to a drive motor 90 synchronized with the drive units of drums of the printer units 14''', 16''' and 18'''. The printed web, after leaving the nip roll, may have the image areas fixed, as by fixing unit 92, and then wound onto a takeup roll. The fixing or curing of the image may be done by known chemical gaseous or heat curing means. This is not a part of this invention, the exact technique for curing or fixing the developed image may vary widely depending on the requirements of the powder used and the space and speed requirements of the process.

While several embodiments of the invention have been disclosed, it will be apparent to those skilled in the art that the embodiments described above may be modified. Therefore, the foregoing description is to be considered exemplary rather than limiting, and the true scope of the invention is that defined in the following claims.

I claim:

1. Apparatus for applying a multicolor image of powder particles capable of being electrically charged to a cylindrical surface comprising means supporting a cylindrical object for rotation about its axis, stationary shield means mounted about the periphery of said object in spaced relationship thereto and having a plurality of slit-like apertures therethrough extending parallel to the axis of said object, a plurality of cylindrical drums mounted for rotation about their respective axes at the side of said shield means remote from said object, each drum axis extending parallel to the axis of said object and lying in a radial plane containing the axis of said object and passing through one of said apertures, means associated with each drum for applying to the surface of that drum a layer of powder particles of one of the colors of said multicolor image in the shape of that portion of the image to be composed of particles of the one color, means for driving said object and said drums in synchronized rotation about their respective axes to expose the image portion defining layers of the respective drums to the surface of said object in registry with each other, and electrical power supply means for applying an electric potential difference between the surface of said object and the surfaces of said drums operable to electrically transfer powder particles from the surfaces of said drums through the respective apertures to the surface of said object.

2. Apparatus for applying a multicolor image of powder particles capable of being electrically charged to a cylindrical surface comprising means supporting a cylindrical object for rotation about its axis, stationary shield means mounted about the periphery of said object in spaced relationship thereto and having a plurality of slit-like apertures therethrough extending parallel to the axis of said object, a plurality of cylindrical drums mounted for rotation about their respective axes at the side of said shield means remote from said object, each drum axis being extended parallel to the axis of said object and lying in a radial plane containing the axis of said object and passing through one of said apertures, means associated with each drum for applying to the surface of the drum a layer of powder particles of one of the colors of said multicolor image in the shape of that portion of the image to be composed of particles of the one color, means for driving said object and said drums in synchronized rotation about their respective axes to expose the image portion defining layers on the respective drums to the surface of said object in registry with each other, and electric power supply means for applying an electric potential difference between the surface of said object and the surfaces of said drums operable to electrically transfer powder particles from the surfaces of said drums through the respective apertures to the surface of said object.

3. Apparatus for applying a multicolor image of powder particles capable of being electrically charged to a cylindrical surface comprising means supporting a cylindrical object for rotation about its axis, stationary shield means mounted about the periphery of said object in spaced relationship thereto and having a plurality of slit-like apertures therethrough extending parallel to the axis of said object, a plurality of cylindrical drums having a peripheral surface layer of photoconductive insulating material located at the side of said shield means remote from said object, each of said drums being mounted for rotation about an axis parallel to the axis of said object and lying in a radial plane containing the axis of said object and passing through one of said slits, means for xerographically applying to the surface of each drum a layer of powder particles of one of the colors of said multicolor image conformed in shape to that portion of the multicolor image to be composed of particles of the one color, means for driving said object and said drums in synchronized rotation about their respective axes to expose the image portion defining layers on the respective drums in registry with each other to the surface of said object, and electric power supply means for applying an electric potential difference between the surface of said object and the surfaces of said drums operable to electrically transfer powder particles from the surfaces of said drums through the respective slits to the surface of said object.

4. Apparatus for applying a multicolor image of powder particles capable of being electrically charged to a

cylindrical article surface comprising means supporting a first cylindrical drum for rotation about its axis, stationary shield means mounted about the periphery of said first drum in spaced relationship thereto and having a plurality of slit-like apertures therethrough extending parallel to the axis of said first drum, a plurality of cylindrical second drums and a cylindrical article located at the side of said shield means remote from said first drum, each of said second drums and said article being mounted for rotation about an axis parallel to the axis of said first drum and lying in a radial plane containing the axis of said object and passing through one of said apertures, means associated with each second drum for applying to the surface of the second drum a layer of powder particles of one of the colors of said multicolor image in the shape of that portion of the image to be composed of particles of the one color, means for driving said first and said second drums in synchronized rotation about their respective axes to expose the image portion defining layers on the respective second drums in registry with each other to the surface of said first drum, means for rotating said article about its axis in the opposite direction and at the same peripheral speed as said first drum, and electric power supply means for applying an electric potential difference between said first and said second drums operable to electrically transfer powder particles from the surfaces of said second drums through the respective apertures to the surface of said first drum to form a mirror image of the desired multicolor image on the surface of said first drum, and means on said power supply means for applying an electric potential difference between said first drum and said article operable to electrically transfer the powder particles of said mirror image from said first drum to the surface of said article.

5. The method of electrically applying a multicolored image of printing powder particles to a cylindrical article surface wherein at least one portion of said image is defined by a layer of powder particles of one color and a second portion of said image is defined by a layer of powder particles of a second color comprising the steps of, electrically attracting powder particles of said one color to a first cylindrical drum to form a layer of particles of said one color on the surface of said first drum shaped to correspond to said one portion of said image, electrically attracting particles of said second color to a second cylindrical drum to form a layer of particles of said second color on the surface of said second drum shaped to correspond to said second portion of said image, rotating said drums and said cylindrical article surface about their respective axes at the same peripheral speed with the drum and article axes disposed in parallel relationship with each other and the peripheries of said drums disposed in adjacent spaced relationship to the cylindrical article surface, positioning a shield having an elongate slit therethrough between each drum and said article surface with said slit extending parallel to the axis of said article surface at the location of closest approach of said article surface and the drum adjacent said shield, and electrically charging said article surface to electrically attract powder particles from said drums through said slits to said articles surface as said drums and surface are rotated past said slits in synchronized relationship with each other.

6. The method of electrically applying a multicolored image of printing powder particles to a surface of an object to be printed wherein at least one portion of said image is defined by a layer of powder particles of one color of second portion of said images defined by a layer of powdered particle of a second color comprising the steps of, electrically attracting powder particles of said one color to a first cylindrical drum to form a layer of particles of said one color of said surface on the first drum shaped to correspond with said one portion of said image, electrically attracting particles of said second color to a second cylindrical drum to form a layer of particles of said second color on the surface of said second drum shaped to correspond with said second portion of said image, simultaneously rotating said drums and moving said surface of the object to be printed such that the drum surfaces and said object surface have the same peripheral speed and the drum and the object surface are in a spaced relationship with each other, positioning a shield having an elongate slit therethrough between each drum and said surface of the object to be printed with said slit extending transversely to the movement of said surface of the object, and applying an electrical charge in the proximity of said surface of the object being printed at the side of the latter remote from the shield to electrically attract powder particles from said drums through their corresponding slit to said surface as the surface of said drums and surface being printed are moving past their said respective slits in synchronized relationship with each other.

7. Apparatus for applying a multicolor image of powder particles capable of being electrically charged to a surface of an object to be printed comprising, means supporting the surface to be printed, a plurality of cylindrical drums mounted in spaced relationship along the surface of said object and rotatable about their respective axes, stationary shield means mounted in spaced relationship to each said drum interposed between each said drum in the surface of said object, each of the shield means having a slit-like aperture therethrough extending parallel to the axes of rotation of its said drum, means associated with each drum for applying to the surface of that drum a layer of powder particles of one of the colors of said multicolored image and the shape of that portion of the image to be composed of particles of the one color, means for moving the surface of said object and rotating each of said drums in synchronized rotation about their respective axes and synchronizing the movement of the surface of said object so as to expose the image portions defined layers on the respective drums to the surface of said object in registry with each other, and electrical power supply means for applying an electrical potential difference between the surface of said object and the surfaces of said drum operable to electrically transfer powder particles from the surfaces of said drums through the respective apertures to the surface of said object.

8. In a process of producing a composite multicolored image, the steps of interposing a subject member between a light source and a light sensitive cylindrical surface of a rotating drum member, where said subject member has a translucent portion and a relatively opaque portion corresponding to a preselected color portion of the composite multicolored image; applying printing material to said cylindrical surface, such that said material is electrically bound to said surface in a pattern corresponding to the light exposure of said surface, interposing a dielectric shield between said surface and an object member, said shield having a slit perpendicular to the direction of rotation of said surface, and applying an electric potential difference between said surface and the object member sufficient to transfer said material from the surface through the slit to the object member.

9. In apparatus for producing a composite multicolored image, the combination comprising, a light source, a rotating drum member having a light sensitive charge retaining cylindrical surface, a subject member having a translucent portion and a relatively opaque portion corresponding to a preselected color portion of the composite multicolored image, and being interposed between said light source and said surface, means applying printing material to said surface in a pattern corresponding to the light exposure of said surface, an object medium, a dielectric shield interposed between said object medium and said surface, said shield having a slit that is perpendicular to the direction of rotation of said surface and parallel to the axis of said drum member, and means for applying an electric potential difference between said surface and the object medium sufficient to transfer said

material from said surface through said slit to said object medium.

10. The apparatus of claim **9** wherein said object medium comprises a web reeved on a guide roll rotatable about an axis parallel to the axis of said drum.

11. The apparatus of claim **9** wherein said object medium comprises a flat member parallel to the axis of said drum.

12. The apparatus of claim **9** wherein said object medium comprises a strip moving past said surface in a direction perpendicular to the axis of said drum.

References Cited

UNITED STATES PATENTS

2,820,716	1/1958	Harmon	117—17.5
2,986,466	5/1961	Kaprelian	95—1.7 X

JOHN M. HORAN, *Primary Examiner.*