(19) Europäisches Patentamt
European Patent Office
Office européen des brevets

(11) **EP 2 065 494 A1**

(12) **EUROPEAN PATENT APPLICATION**

(43) Date of publication:
03.06.2009 Bulletin 2009/23

(51) Int Cl.:
D02H 3/00 *(2006.01)*

(21) Application number: **08003985.2**

(22) Date of filing: **04.03.2008**

(84) Designated Contracting States:
AT BE BG CH CY CZ DE DK EE ES FI FR GB GR HR HU IE IS IT LI LT LU LV MC MT NL NO PL PT RO SE SI SK TR
Designated Extension States:
AL BA MK RS

(30) Priority: **29.11.2007 TW 96145477**

(71) Applicant: **CCI Tech inc.**
TuCheng City
T'ai pei 236 (TW)

(72) Inventors:
- **Chung, Jih-Lung**
  TuCheng City, Taipei 236 (TW)
- **Chan, Yun-Sang**
  TuCheng City, Taipei 236 (TW)
- **Chen, Cheng-Chang**
  TuCheng City, Taipei 236 (TW)
- **Chen, Kuei-Nan**
  TuCheng City, Taipei 236 (TW)

(74) Representative: **Becker Kurig Straus**
Patentanwälte
Bavariastrasse 7
80336 München (DE)

(54) **Method for replacing yarns automatically in a warping machine**

(57) In a method used in a warping machine (10) to replace yarns automatically, a CPU (11) of a warping machine accesses a pre-configured program, and when warping, determines whether an arrangement of warps of each succeeding cycle is identical to that of a previous cycle, depending on that program. Next, depending on the arrangement, a yarn replacement device (23) is controlled to cut off yarns of a cheese (211) to be replaced on a rotating creel (21), and a mechanical arm (24) exchanges the cheese (221) on a yarn creel (22) with the cheese (211) to be replaced. Then, a yarn joiner (25) reconnects the yarn of the exchanged cheese (221) to the yarn head previously wound on the warping machine, allowing the exchanged cheese (221) to be emplaced on an original warping position of the rotating creel (21), to continue warping. Therefore, through instructions of the program, the warping yarns are replaced to warp into many warps of various patterns and colors.

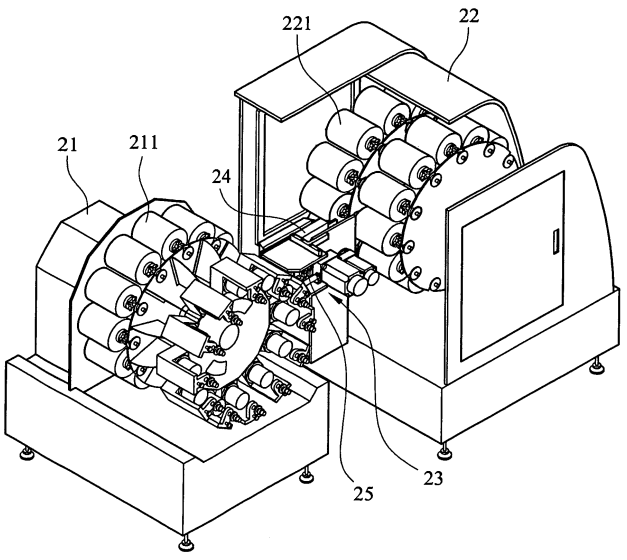

FIG. 4

EP 2 065 494 A1

Description

BACKGROUND OF THE INVENTION

(a) Field of the Invention

[0001] The present invention relates to a method which is used in a warping machine 10 to replace yarns automatically, and more particularly to a method that is used in a warping machine 10 to replace yarns in a warping process with a pre-configured program, so as to warp into a plurality of warps of various patterns and colors.

(b) Description of the Prior Art

[0002] In making a yard goods conventionally, spools of cheeses are first used to extract a plurality of yarns of equal length, according to required length and quantity, sequentially. For example, if ten thousand yarns are needed, then ten cheeses will be used. Each cheese is being conducted with an identical operation for one thousand times to acquire ten thousand yarns of the equal length, which are then wound on a beam of a warping machine to form warps required for weaving. This manufacturing step is the so-called warping step. Finally, the warps are interwoven with filling yarns through a weaving machine, to form products of knitted fabrics.

[0003] However, in the warping step, a rotating creel will be installed at a side of the warping machine, and the rotating creel will be disposed at a same time with a plurality of cheeses to wind the yarns on the beam of the warping machine. Yet, when replacing with a cheese of a different color, the warping machine and the rotating creel should be shutdown at a same time, and then the cheese of the required color is replaced on the rotating creel manually, so as to continue warping the yarns of the different color. Nevertheless, as the yard goods is usually constituted by the yarns of a plurality of colors, if this manual method is used to replace the cheeses, then the warping machine and the rotating creel should be shutdown frequently, and the replacement will be very inconvenient, thereby increasing a manufacturing time and production cost.

SUMMARY OF THE INVENTION

[0004] The primary object of the present invention is to provide a method which is used in a warping machine to replace yarns automatically, such that yarns can be replaced in a warping process to warp into a plurality of warps of various patterns and colors with a pre-configured program.

[0005] Accordingly, in a method to replace yarns automatically of the present invention, a CPU of a warping machine accesses a pre-configured program, which includes an arrangement of warps, from a memory, such that when the warping machine is warping, the CPU can determine whether the arrangement of the warps of each succeeding cycle is same as that of a previous cycle according to that program, and then, depending on the arrangement, controls the warping machine to pause warping, and controls a rotating creel and a yarn creel to move two cheeses, with one cheese being taken down and the other one being replaced on, to positions awaiting the replacement. Next, a yarn replacement device is controlled to cut off yarns on the rotating creel, and a mechanical arm is used to exchange the two cheeses at the positions awaiting the replacement. Then, a yarn joiner is used to re-connect yarn heads of the cheese which is replaced on the rotating creel to yarn heads of the yarns which were previously wound on the warping machine, such that the newly replaced cheese can be emplaced on an original warping position of the rotating creel to continue the warping operation. Accordingly, through instructions of the program, the yarns of warping can be replaced continuously, thereby warping into a plurality of warps of various patterns and colors.

[0006] To enable a further understanding of the said objectives and the technological methods of the invention herein, the brief description of the drawings below is followed by the detailed description of the preferred embodiments.

BRIEF DESCRIPTION OF THE DRAWINGS

[0007]

FIG. 1 shows a block diagram of a warping machine of the present invention.

FIG. 2 shows a flow diagram of operations of a warping machine of the present invention.

FIG. 3 shows a perspective view of a warping machine of the present invention.

FIG. 4 shows a perspective view of a yarn replacement device in a warping machine of the present invention.

DETAILED DESCRIPTION OF THE PREFERRED EMBODIMENTS

[0008] Referring to FIGS. 1 to 4, in a method to replace yarns automatically of the present invention, a CPU 11 of a warping machine 10 accesses a pre-configured program, which includes an arrangement of warps, from a memory 12, such that when the warping machine 10 is warping, the CPU 11 can determine whether the arrangement of the warps of each succeeding cycle is same as that of a previous cycle according to that program, and then, depending on the arrangement, controls the warping machine 10 to pause warping, and controls a rotating creel 21 and a yarn creel 22 to move two cheeses 211, 221, with one cheese being taken down and the other one being replaced on, to positions awaiting the replacement. Next, a yarn replacement device 23 is controlled to cut off yarns on the rotating creel 21, and a mechanical arm 24 is used to exchange the two cheeses 211, 221

at the positions awaiting the replacement. Then, a yarn joiner 25 is used to re-connect yarn heads of the cheese 221 which is replaced on the rotating creel 21 to yarn heads of the yarns which were previously wound on the warping machine 10, such that the newly replaced cheese 221 can be emplaced on an original warping position of the rotating creel 21 to continue the warping operation after the warping machine 10 is restarted. Accordingly, through instructions of the program, the yarns of warping can be replaced continuously, thereby warping into a plurality of warps of various patterns and colors.

[0009] Referring to FIG. 1, FIG. 3 and FIG. 4, the CPU 11 and the memory 12 are located on a computer 101 of the warping machine 10, and the computer 101 also includes a screen 13 and a keyboard 14, wherein the rotating creel 21, the yarn creel 22, the yarn replacement device 23, and the warping machine 10 are controlled by the CPU 11 to carry out the warping operation and the replacement of yarns. On the other hand, the screen 13 can display states and data during and after an execution of the CPU 11. Before warping, the keyboard 14 can be used to configure the warping program in the memory 12, and while warping, the keyboard 14 can be used to enter instructions for excluding errors of the CPU 11 and to enter instructions for replacing a procedure of the warping operation.

[0010] Referring to FIG. 1, FIG. 3, and FIG. 4, the rotating creel 21 and the yarn creel 22 are controlled by the CPU 11 of the warping machine 10 to replace yarns. When replacing the yarns, the CPU 11 can control the rotating creel 21 and the yarn creel 22 to move the cheeses 211, 221, with one cheese being taken down and the other one being replaced on, to the positions awaiting the replacement. After replacing the yarns, the CPU 11 controls the rotating creel 21 and the yarn creel 22 to warp again.

[0011] Referring to FIG. 1, FIG. 3, and FIG. 4, the mechanical arm 24 and the yarn joiner 25 are located on the yarn replacement device 23 which is controlled by the CPU 11 of the warping machine 10 to replace the yarns. When replacing the yarns, the CPU 11 can control a cutting tool (not shown in the drawings) of the yarn replacement device 23 to cut off the yarns on the rotating creel 21, and then control the mechanical arm 24 to exchange the two cheeses 211, 221 at the positions awaiting the replacement. Following that, the yarn joiner 25 is controlled to re-connect the yarn heads of the cheese 221 which is replaced on the rotating creel 21 to the yarn heads of the yarns which were previously wound on the warping machine 10, such that the newly replaced cheese 221 can be emplaced on the original warping position of the rotating creel 21.

[0012] Referring to FIGS. 2 to 4, when using the method of the present invention to warp, the computer 101 will process according to following steps:

(201) First of all, the CPU 11 of the computer 101 accesses a pre-configured program, which includes an arrangement of warps, from the memory 12.

(202) Different cheeses 221 are loaded on designated positions of the yarn creel 22 manually, following an instruction.

(203) According to the program of yarn arrangement, the mechanical arm 24 is controlled to load a first batch of the cheeses 211 on the rotating creel 21, automatically.

(204) Yarn heads of the cheese 211 on the rotating creel 21 are passed through a yarn storage device 15 and yarn hooks on a winding ring 16 of the warping machine 10, and the other ends of the yarn heads that have been passed through the yarn hooks are fixed on a warping roller 17 of the warping machine 10, manually.

(205) The winding ring 16 is controlled to wind the yarns on the warping roller 17 depending on a designated number of loops, and leasing rods 18 of the warping machine 10 are controlled to lease into the yarn heads of each warp.

(206) Determining whether the warping of all warps has been accomplished, and if the warping has been done, then a step (211) will be executed; otherwise, a step (207) will be executed.

(207) Determining whether an arrangement of the warps of a succeeding cycle is same as that of a previous cycle, and if they are same, then the step (205) will be executed; otherwise, a following step (208) will be executed.

(208) The warping machine 10 is controlled to pause warping, and then the rotating creel 21 and the yarn creel 22 are controlled to move the cheeses 211, 221, with one cheese being taken down and the other one being replaced on, to the positions awaiting the replacement.

(209) The cutting tool of the yarn replacement device 23 is controlled to cut off the yarns on the rotating creel 21, and then the mechanical arm 24 is controlled to exchange the two cheeses 211, 221 at the positions awaiting the replacement. Following that, the yarn joiner 25 is controlled to re-connect the yarn heads of the yarns of the cheese 221 which is replaced on the rotating creel 21 to the yarn heads of the yarns that were previously wound on the warping machine 10, such that the newly replaced cheese 221 can be emplaced on the original warping position of the rotating creel 21.

(210) Determining whether all of the cheeses 211, 221 for this cycle have been replaced, and if they have, then the step (205) will be executed; otherwise, the step (208) will be executed.

(211) The yarn heads of each warp are cut off by using a cutting tool (not shown in the drawings), and these warps are fixed on a beam of a beaming machine (not shown in the drawings).

(212) All of the warps are put on the beam of the beaming machine, and the process is terminated.

[0013] It is of course to be understood that the embodiments described herein is merely illustrative of the principles of the invention and that a wide variety of modifications thereto may be effected by persons skilled in the art without departing from the spirit and scope of the invention as set forth in the following claims.

Claims

1. A method which is used in a warping machine to replace yarns automatically, using a CPU 11 of a warping machine 10 to access a pre-configured program, which includes an arrangement of warps, from a memory 12, such that when the warping machine 10 is warping, the CPU 11 determines whether the arrangement of warps of each succeeding cycle is same as that of a previous cycle according to that program, and then controls the warping machine 10 to pause warping, and controls a rotating creel 21 and a yarn creel 22 to move two cheeses 211, 221, with one cheese being taken down and the other one being replaced on, to positions awaiting the replacement, depending on the arrangement; next, a yarn replacement device 23 being controlled to cut off yarns on the rotating creel 21, and a mechanical arm 24 being used to exchange the two chesses 211, 221 at the positions awaiting the replacement; then, a yarn joiner 25 being used to re-connect yarn heads of the yarns of the cheese 221 which is replaced on the rotating creel 21 to yarn heads of the yarns that were previously wound on the warping machine 10, allowing the newly replaced cheese 221 to be emplaced on an original warping position of the rotating creel 21 to continue warping after the warping machine 10 is restarted; accordingly, through instructions of the program, the yarns of warping being replaced continuously, such that a plurality of warps of different patterns and colors are warped.

2. The method which is used in a warping machine to replace yarns automatically, according to claim 1, wherein the CPU 11 and the memory 12 are located on a computer 101 of the warping machine 10, and the computer 101 includes also a screen 13 and a keyboard 14; the rotating creel 21, the yarn creel 22, the yarn replacement device 23, and the warp machine 10 being controlled by the CPU 11 to warp and to replace yarns; the screen 13 displaying states and data during and after an execution of the CPU 11; before and after warping, the keyboard 14 being used to enter instructions for excluding errors of the CPU 11 and to enter instructions for replacing a procedure of the warping operation.

3. The method which is used in a warping machine to replace yarns automatically, according to claim 2, wherein when replacing yarns, the CPU 11 controls the rotating creel 21 and the yarn creel 22 to move the cheeses 211, 221, with one cheese being taken down and the other one being replaced on, to positions awaiting the replacement.

4. The method which is used in a warping machine to replace yarns automatically, according to claim 2, wherein the mechanical arm 24 and the yarn joiner 25 are located on the yarn replacement device 23 which is controlled by the CPU 11 to replace yarns; when replacing the yarns, the CPU 11 controlling a cutting tool of the yarn replacement device 23 to cut off yarns on the rotating creel 21, and then controlling the mechanical arm 24 to exchange the two cheeses 211, 221 at the positions awaiting the replacement, following that, controlling the yarn joiner 25 to reconnect the yarn heads of the yarns of the cheese 221 which is replaced on the rotating creel 21 to the yarn heads of the yarns that were previously wound on the warping machine 10, allowing the newly replaced cheese 221 to be emplaced on an original warping position of the rotating creel 21.

5. The method which is used in a warping machine to replace yarns automatically, according to claim 1, including following steps:

   (01) first of all, the CPU 11 of the computer 101 accessing the pre-configured program from the memory 12, with the program including the arrangement of the warps;
   (02) different cheeses 221 being loaded on designated positions of the yarn creel 22 manually, following an instruction;
   (03) according to the program of yarn arrangement, the mechanical arm 24 being controlled to load a first batch of the cheeses 211 on the rotating creel 21, automatically;
   (04) yarn heads of the cheese 211 on the rotating creel 21 being passed through a yarn storage device 15 and yarn hooks on a winding ring 16 of the warping machine 10, and the other ends of the yarn heads that have been passed through the yarn hooks being fixed on a warping roller 17 of the warping machine 10, manually;
   (05) the winding ring 16 being controlled to wind the yarns on the warping roller 17 depending on a designated number of loops, and leasing rods 18 of the warping machine 10 being controlled to lease into the yarn heads of each warp;
   (06) determining whether the warping of all warps has been accomplished, and if the warping being done, then executing a step (11); otherwise, executing a step (07);
   (07) determining whether an arrangement of the yarns of a succeeding cycle is same as that of a previous cycle, and if being same, then executing the step (05); otherwise, executing a fol-

lowing step (08);

(08) the warping machine 10 being controlled to pause warping, and then the rotating creel 21 and the yarn creel 22 being controlled to move the cheeses 211, 221, with one cheese being taken down and the other one being replaced on, to positions awaiting the replacement;

(09) the cutting tool of the yarn replacement device 23 being controlled to cut off the yarns on the rotating creel 21, and then the mechanical arm 24 being controlled to exchange the two cheeses 211, 221 at the positions awaiting the replacement, following that, the yarn joiner 25 being controlled to re-connect the yarn heads of the cheese 221 which is replaced on the rotating creel 21 to the yarn heads of the yarns that were previously wound on the warping machine 10, allowing the newly replaced cheese 221 to be emplaced on an original warping position of the rotating creel 21;

(10) determining whether all of the cheeses 211, 221 for this cycle have been replaced, and if being replaced, then executing the step (05); otherwise, executing the step (08);

(11) a cutting tool being used to cut off the yarn heads of each warp, and these warps being fixed on a beam of a beaming machine;

(12) all of the warps being put on the beam of the beaming machine, and the process being terminated.

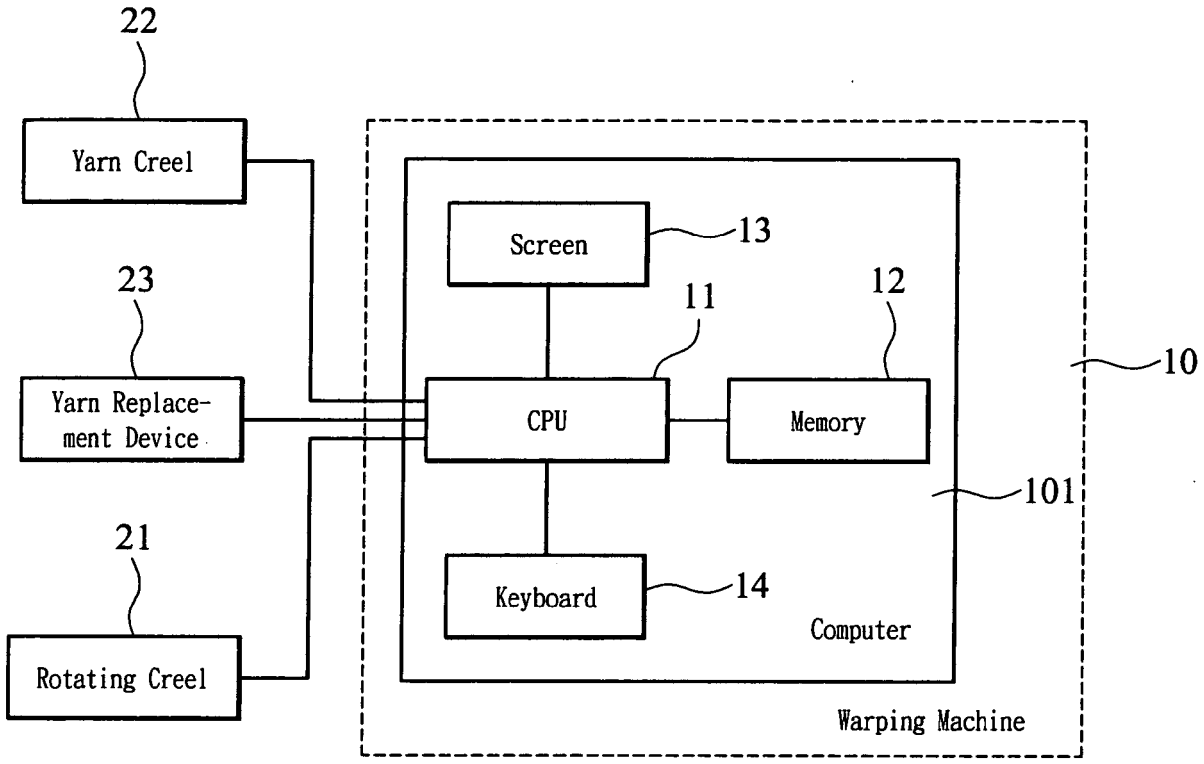
22
Yarn Creel
23
Yarn Replace-
ment Device
21
Rotating Creel
Screen
13
11
12
CPU
Memory
Keyboard
14
Computer
101
10
Warping Machine

FIG. 1

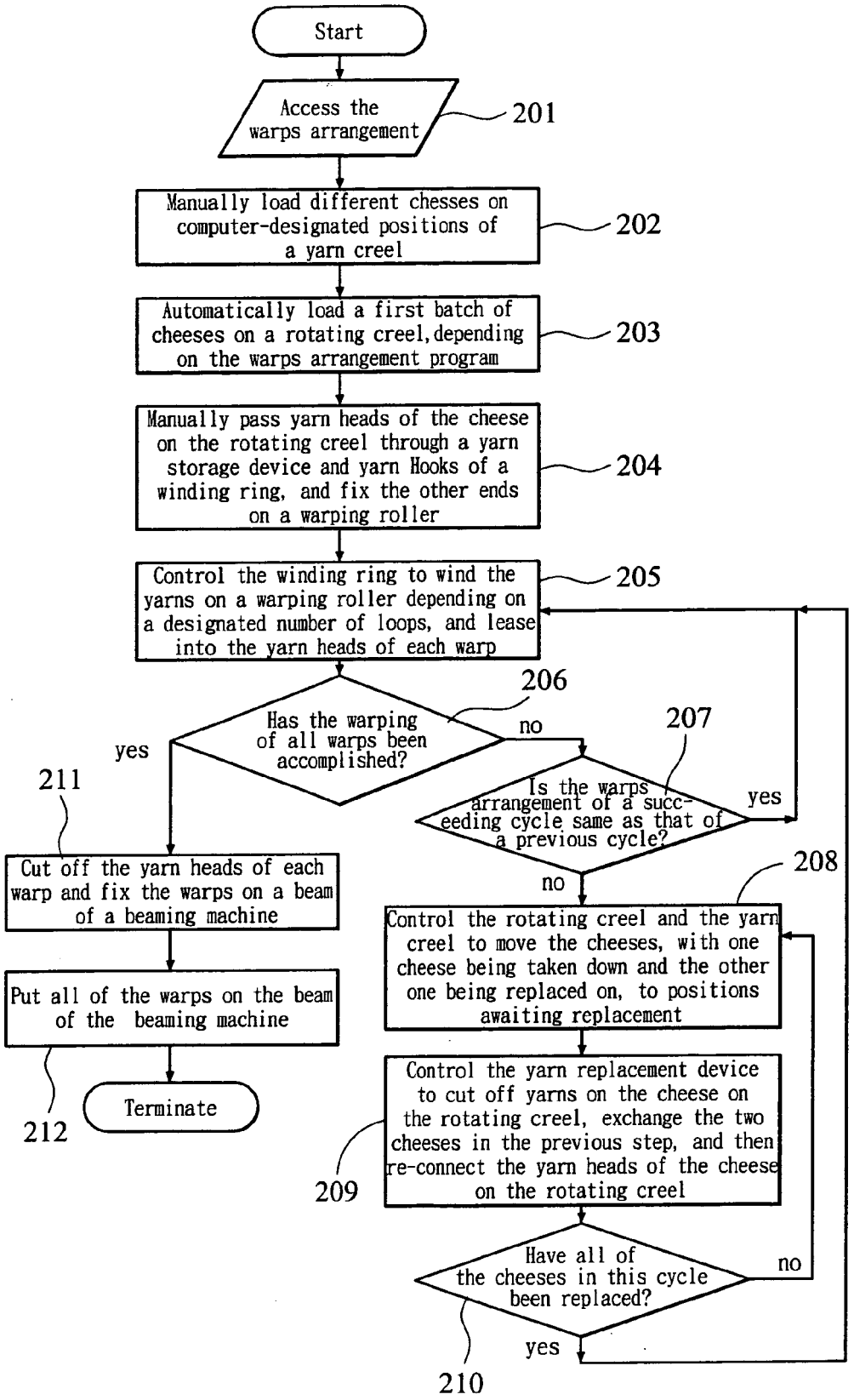
Start
Access the warps arrangement
201
Manually load different chesses on computer-designated positions of a yarn creel
202
Automatically load a first batch of cheeses on a rotating creel, depending on the warps arrangement program
203
Manually pass yarn heads of the cheese on the rotating creel through a yarn storage device and yarn Hooks of a winding ring, and fix the other ends on a warping roller
204
Control the winding ring to wind the yarns on a warping roller depending on a designated number of loops, and lease into the yarn heads of each warp
205
206
Has the warping of all warps been accomplished?
yes
no
207
Is the warps arrangement of a succeeding cycle same as that of a previous cycle?
yes
no
211
Cut off the yarn heads of each warp and fix the warps on a beam of a beaming machine
Put all of the warps on the beam of the beaming machine
212
Terminate
208
Control the rotating creel and the yarn creel to move the cheeses, with one cheese being taken down and the other one being replaced on, to positions awaiting replacement
209
Control the yarn replacement device to cut off yarns on the cheese on the rotating creel, exchange the two cheeses in the previous step, and then re-connect the yarn heads of the cheese on the rotating creel
Have all of the cheeses in this cycle been replaced?
no
yes
210

FIG. 2

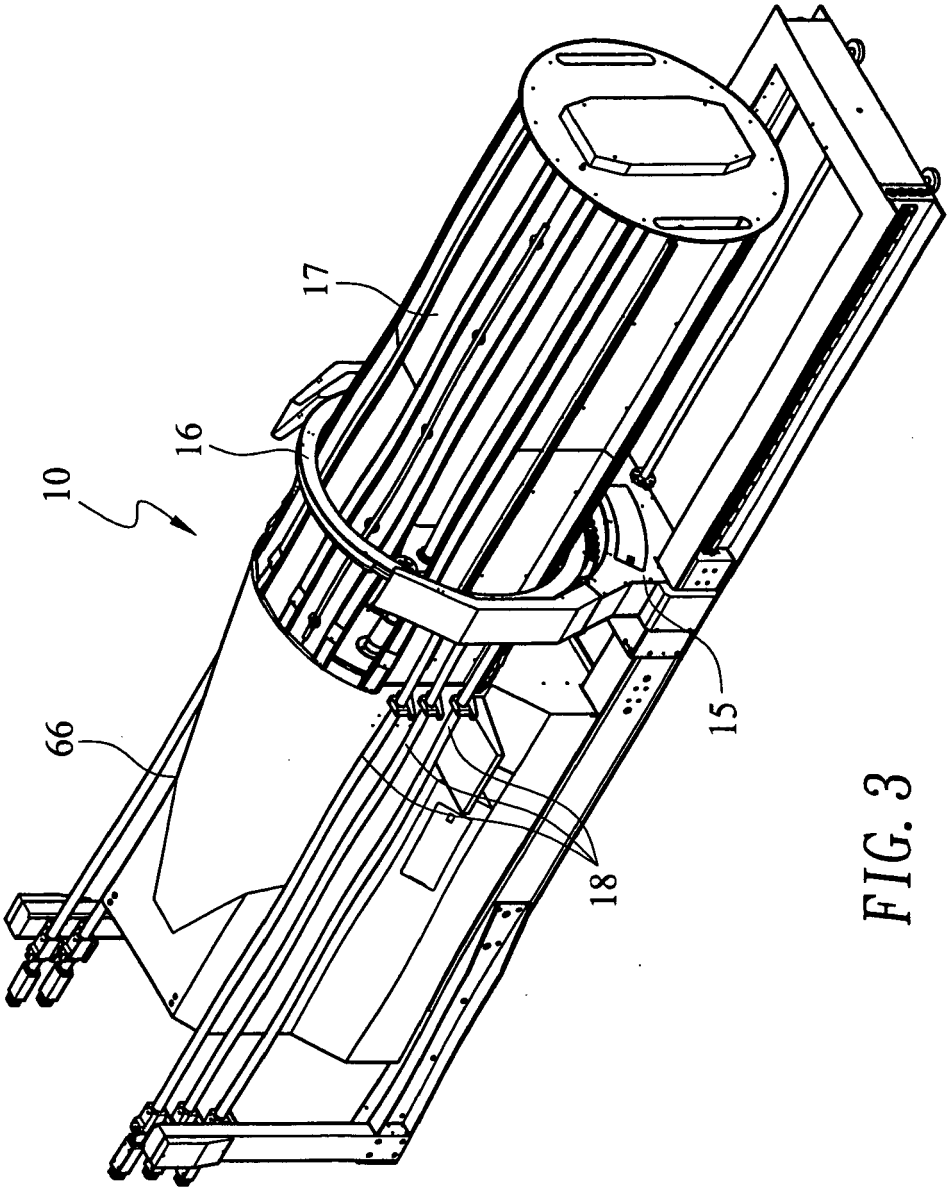

FIG. 3

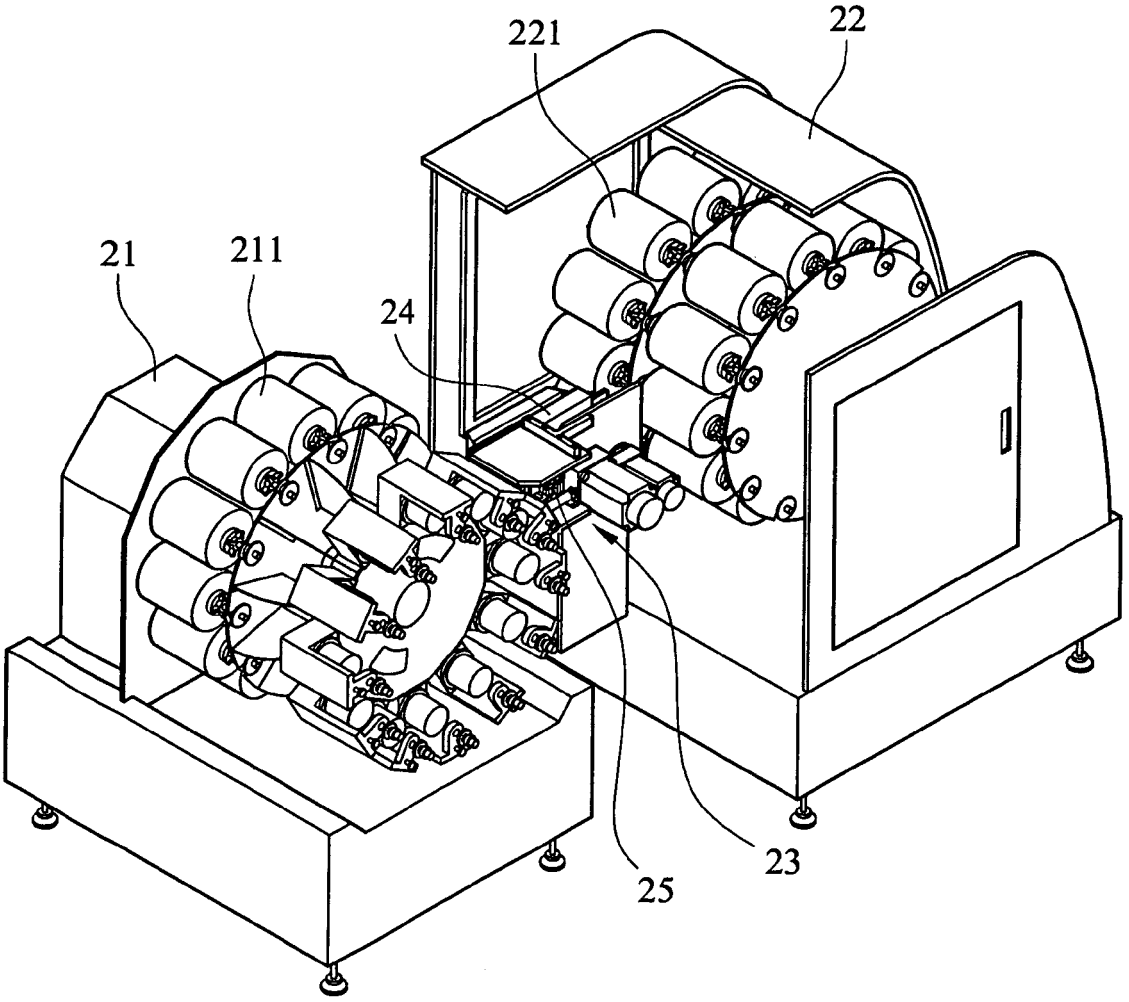

FIG. 4

European Patent Office

EUROPEAN SEARCH REPORT

Application Number
EP 08 00 3985

DOCUMENTS CONSIDERED TO BE RELEVANT

Category	Citation of document with indication, where appropriate, of relevant passages	Relevant to claim	CLASSIFICATION OF THE APPLICATION (IPC)
X	US 2007/138332 A1 (CHUNG JIH-LUNG [TW]) 21 June 2007 (2007-06-21) * paragraph [0022] - paragraph [0024]; figures 1,2 * * paragraph [0005] - paragraph [0006] *	1-5	INV. D02H3/00
A	US 2002/026698 A1 (TANAKA YOSHIHIRO [JP] ET AL) 7 March 2002 (2002-03-07) * paragraph [0018] - paragraph [0019]; figure 3 * * paragraph [0037] - paragraph [0040] *	1	

TECHNICAL FIELDS SEARCHED (IPC)

D02H

The present search report has been drawn up for all claims

Place of search	Date of completion of the search	Examiner
Munich	5 June 2008	Pollet, Didier

CATEGORY OF CITED DOCUMENTS

X : particularly relevant if taken alone
Y : particularly relevant if combined with another document of the same category
A : technological background
O : non-written disclosure
P : intermediate document

T : theory or principle underlying the invention
E : earlier patent document, but published on, or after the filing date
D : document cited in the application
L : document cited for other reasons

& : member of the same patent family, corresponding document

EPO FORM 1503 03.82 (P04C01)

ANNEX TO THE EUROPEAN SEARCH REPORT ON EUROPEAN PATENT APPLICATION NO. EP 08 00 3985

This annex lists the patent family members relating to the patent documents cited in the above-mentioned European search report. The members are as contained in the European Patent Office EDP file on
The European Patent Office is in no way liable for these particulars which are merely given for the purpose of information.

05-06-2008

Patent document cited in search report	Publication date	Patent family member(s)	Publication date
US 2007138332 A1	21-06-2007	NONE	
US 2002026698 A1	07-03-2002	DE 1197590 T1	06-02-2003
		EP 1197590 A1	17-04-2002
		JP 3409025 B2	19-05-2003
		JP 2002069778 A	08-03-2002

EPO FORM P0459

For more details about this annex : see Official Journal of the European Patent Office, No. 12/82