PCT WORLD INTELLECTUAL PROPERTY ORGANIZATION
International Bureau

INTERNATIONAL APPLICATION PUBLISHED UNDER THE PATENT COOPERATION TREATY (PCT)

(51) International Patent Classification 5 : C04B	A2	(11) International Publication Number: WO 92/20634
		(43) International Publication Date: 26 November 1992 (26.11.92)

(21) International Application Number: PCT/US92/04128

(22) International Filing Date: 15 May 1992 (15.05.92)

(30) Priority data:
701,504 16 May 1991 (16.05.91) US

(60) Parent Application or Grant
(63) Related by Continuation
US 701,504 (CIP)
Filed on 16 May 1991 (16.05.91)

(71) Applicant *(for all designated States except US)*: COORS CERAMICON DESIGNS, LTD. [US/US]; 16000 Table Mountain Parkway, Golden, CO 80403 (US).

(72) Inventors; and
(75) Inventors/Applicants *(for US only)* : CAMERON, Connie [US/US]; 5383 West 68th Avenue, Arvada, CO 80003 (US). McNERNEY, James, P. [US/US]; 8425 Quay Drive, Arvada, CO 80003 (US). GEVING, Lynn, D. [US/US]; 2996 Gafield Avenue South, Denver, CO 80210 (US). ORMISTON, Thomas, J. [US/US]; 4832 S.E. Madsen Court, Hillsboro, OR 97123 (US).

(74) Agents: KOVARIK, Joseph, E. et al.; Sheridan Ross & McIntosh, 1700 Lincoln Street, 35th Floor, Denver, CO 80203 (US).

(81) Designated States: AT, AT (European patent), AU, BB, BE (European patent), BF (OAPI patent), BG, BJ (OAPI patent), BR, CA, CF (OAPI patent), CG (OAPI patent), CH, CH (European patent), CI (OAPI patent), CM (OAPI patent), CS, DE, DE (European patent), DK, DK (European patent), ES, ES (European patent), FI, FR (European patent), GA (OAPI patent), GB, GB (European patent), GN (OAPI patent), GR (European patent), HU, IT (European patent), JP, KP, KR, LK, LU, LU (European patent), MC (European patent), MG, ML (OAPI patent), MN, MR (OAPI patent), MW, NL, NL (European patent), NO, PL, RO, RU, SD, SE, SE (European patent), SN (OAPI patent), TD (OAPI patent), TG (OAPI patent), US.

Published
Without international search report and to be republished upon receipt of that report.

(54) Title: METHOD OF COATING CERAMIC MATERIAL AND CERAMIC MATERIAL PRODUCED THEREBY

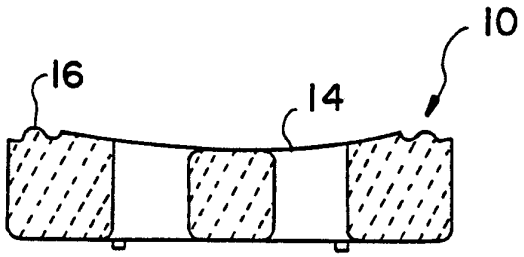

(57) Abstract

The present invention relates to a method for coating ceramic material, and more particularly the coating of ceramic material with silicone coatings having zirconate coupling agents therein or with a silane coating having a silicone coating applied thereon. Ceramic material is cleaned (26) with a suitable cleaning agent to remove undesired oils or other matter, such as particulates, is heated (28) to dry excess moisture from the surface of the material, and is coated (30) with a silicone coating, preferably having an effective amount of zirconate coupling agent therein (24), prior to the coating being cured (34) at temperature of from about 400 °F to about 525 °F for a period of between about 20 minutes and one hour. The resulting coated ceramic material has superior abrasion resistance, heat resistance, high hardness, and low co-efficient of friction. The present method of coating ceramic material and the coated ceramic material itself finds particular application in the production of buttons for articles of clothing. One aspect of the invention relates to a button that has improved strength and durability characteristics, such button preferably comprising stabilized zirconia, alumina, zirconia-alumina composites, or silicon carbide whisker reinforced ceramics.

FOR THE PURPOSES OF INFORMATION ONLY

Codes used to identify States party to the PCT on the front pages of pamphlets publishing international applications under the PCT.

AT	Austria	**ES**	Spain	**MG**	Madagascar
AU	Australia	**FI**	Finland	**ML**	Mali
BB	Barbados	**FR**	France	**MN**	Mongolia
BE	Belgium	**GA**	Gabon	**MR**	Mauritania
BF	Burkina Faso	**GB**	United Kingdom	**MW**	Malawi
BG	Bulgaria	**GN**	Guinea	**NL**	Netherlands
BJ	Benin	**GR**	Greece	**NO**	Norway
BR	Brazil	**HU**	Hungary	**PL**	Poland
CA	Canada	**IT**	Italy	**RO**	Romania
CF	Central African Republic	**JP**	Japan	**SD**	Sudan
CG	Congo	**KP**	Democratic People's Republic of Korea	**SE**	Sweden
CH	Switzerland			**SN**	Senegal
CI	Côte d'Ivoire	**KR**	Republic of Korea	**SU**	Soviet Union
CM	Cameroon	**LI**	Liechtenstein	**TD**	Chad
CS	Czechoslovakia	**LK**	Sri Lanka	**TG**	Togo
DE	Germany	**LU**	Luxembourg	**US**	United States of America
DK	Denmark	**MC**	Monaco		

METHOD OF COATING CERAMIC MATERIAL AND CERAMIC MATERIAL PRODUCED THEREBY

Related Application

This is a continuation in part of U.S. Patent Application Serial No. 07/701,504, filed May 16, 1991, entitled "IMPROVED BUTTON FOR ARTICLES OF CLOTHING", which is incorporated herein by reference in its entirety.

Field of the Invention

The present invention relates to a method for coating ceramic material, and more particularly relates to the coating of ceramic material with silicone having coupling agents dispersed therein or alternatively, to the coating of ceramic material with a silane composition followed by a silicone coating. Ceramic materials coated in accordance with the present invention can possess a low-coefficient of friction, high hardness, detergent resistance, and a clear finish, finding particular application in the production of ceramic shirt buttons. The present invention is also directed to a button fabricated from a ceramic material possessing high strength and fracture toughness.

Background of the Invention

Ceramic materials are often used in applications where they are brought into contact with other materials, such as metal surfaces. Under such conditions, the ceramic material can pick up particles of metal on its surface, thereby discoloring the ceramic surface. Such

adherence of metal to ceramic surfaces may also affect the physical characteristics of the ceramic material, thereby deleteriously affecting the functioning of articles made using such ceramic material. The presence of metal on a ceramic material may therefore be undesirable from an aesthetic as well as from a practical perspective.

Prior investigators have attempted to formulate coatings for ceramic material to overcome various problems. For example, U.S. Patent No. 4,937,484 by Ishino, issued June 26, 1990, is directed to an improved spark plug having a heat-proof insulating coating of silicone oil blended with a mixture of paraffin and ozokerite to achieve desired insulating effects. Others have attempted to coat plastic and glass substrates with coatings made from ceramic materials to provide desired transparency and scratch resistance. For example, U.S. Patent No. 5,013,607 to Sato et al., issued May 7, 1991, describes a transparent, conductive, ceramic-coated substrate having particular use in the coating of glass used in copying machines. Still others have developed multi-layer ceramic or ceramic-like coatings for electronic devices. For example, U.S. Patent 4,997,482, to Haluska et al., issued March 5, 1991, relates to the forming of protective coatings for electronic devices prior to ceramifying such devices.

Prior investigators, however, have not directed their efforts to the coating of ceramic material to eliminate undesirable aesthetic as well as practical problems

associated with the frictional contact between ceramic material and other hard surfaces. Ceramic material is used in various industrial applications wherein the ceramic material is brought into frictional contact with other surfaces, thereby picking up particles of such surfaces. A build-up of foreign particles on the surface of a ceramic may adversely affect the desired characteristics of the ceramic. For instance, ceramic parts may have their heat transference characteristics altered by the adherence of metal to the ceramic surface. In other applications where ceramic materials may be alternately exposed to physical abrasion with metal surfaces and then brought into contact with chemical solutions, undesired chemical reactions may occur. To overcome such problems, it would be advantageous to develop a method of coating ceramic material with a sufficiently abrasion-resistant coating. The use of coated ceramic material having improved friction characteristics would prevent undesired discoloration and wear on the ceramic material itself, and would also reduce the wear on surfaces brought into contact with the ceramic material.

With the advent of new ceramic materials, for example, those described by applicant in co-pending Patent Application Serial No. 07/701,504 directed to an improved button for articles of clothing, a need has arisen with respect to effective coatings to protect and beautify such ceramic materials. In the past, buttons, particularly

buttons for dress shirts, were fabricated from mother-of-pearl. The mother-of-pearl was durable and met the requirements of the clothing industry for many years. Nonetheless, much of the clothing industry switched to a less expensive polyester resin material when easy-care permanent-press fabrics were introduced in the 1960's.

While the polyester resin buttons are sufficient for shirts that do not require pressing, they do not perform well when subjected to the hot presses and commercial laundering detergents that are now widely used, particularly for all-cotton shirts. Commercial laundering subjects the buttons to significant wear and stress, and the polyester resin tends to become brittle with age. A men's dress shirt is particularly prone to these problems because the smaller collar and cuff buttons are more likely to break than larger buttons.

Button breakage presents a significant problem for the commercial laundering business, as well as the consumer. Commercial laundries must often replace the buttons that are broken during the laundering process. Commercial laundries use a large number of buttons due to this problem and often employ one or more persons whose sole responsibility is to replace broken buttons. This costs the laundry a great deal of money for manpower and materials.

The dress shirt industry has recognized this problem and has expended a great deal of time and effort to identify a practical solution. See, for example, the

article "Scramble Is On to Develop the Unbreakable Button," published in the New York Times on September 11, 1989. It is disclosed therein that experts have experimented with buttons having different materials, shapes, sizes, and thicknesses. Also see the article "All broken up: Shirt maker tackles that button problem," in the Milwaukee Journal, December, 27, 1989.

Despite this long felt need by the clothing industry and the efforts exerted by the industry, a practical solution to the problem has not previously been identified.

For a button to be useful, a button must have a high strength and be resistant to corrosion from extremely hot steam presses, high concentrations of laundering solvents or detergents, and the like. A problem encountered in the use of ceramic buttons is that the buttons tend to scuff and discolor largely due to the use of washing machines having stainless steel drums. A coating to protect buttons from such abrasion and discoloration has been desired, but up until now no satisfactory coating formulation has been available.

Summary of the Invention

The present invention relates to a method of coating ceramic material, particularly ceramic bodies, as well as the composite produced pursuant to such method.

The silicone coated ceramic material of the present invention is especially useful in applications where

ceramic articles are required to withstand considerable physical abuse from the environment without discoloration, marring or chipping. In accordance with one embodiment of the present invention, ceramic material is cleaned with a suitable cleaning agent, including acidic, caustic or organic terpene-based cleaners, to remove any undesired oils or other particulate matter from the surface of the ceramic material. Any excess moisture and residual oils or greases can be removed from the surface of the ceramic material by heating the material. A silicone coating, preferably a silicone/solvent mixture having an effective amount of coupling agent dispersed therein, preferably a zirconate coupling agent, is applied to the surface of the ceramic material. In a preferred embodiment, the coating is then cured at a temperature of about 475° F, for a period of about 20 minutes, resulting in coated ceramic material having superior abrasion resistance, high hardness, a low coefficient of friction and resistance to undesired chemical reaction. The coated ceramic material of the present invention may be used in any application where an abrasion resistent coating is desired on ceramic material, for instance, for coating ceramic putters or for coating cookware.

In another embodiment of the present invention, silane is dissolved in a suitable solvent, hydrolyzed to form silane hydroxide and is then applied to a pre-cleaned and dried ceramic material. After air-drying and curing of the silane coating, a silicone coating is applied to

the surface of the silane-coated ceramic material. The silicone coating is then cured to produce coated ceramic material having desired abrasion resistance characteristics.

In one particular embodiment of the present invention, a button for an article of clothing is provided, wherein the button includes a ceramic material. Preferably, the ceramic material has a strength of at least about 250 MPa and a critical stress-intensity factor of at least about 3 to 4 $MPam^{½}$. In one embodiment, the ceramic material has the strength of at least about 300 MPa. The ceramic material is preferably be selected from the group consisting of partially stabilized zirconia, alumina, alumina-zirconia composites, and silicon carbide (SiC) whisker-reinforced composites. In a more preferred embodiment, the button consists essentially of magnesia-partially stabilized zirconia. In one embodiment, the button is substantially white in color.

The button according to the present invention is highly resistant to deterioration caused by laundering solvents and detergents. Further, it is able to withstand high temperatures and high stresses that it can be exposed to during cleaning and pressing operations and during use.

In a more preferred embodiment, the button consists essentially of a magnesia-partially stabilized zirconia having a strength greater than about 350 MPa and a critical stress-intensity factor greater than about 8 $MPam^{½}$, and the button is substantially white.

Another embodiment relates to a coating for the ceramic button of the present invention. Such coating comprises either a silicone/coupling agent composition or a silane composition coated with a silicone composition.

The present invention also provides a dress shirt having a torso section with a plurality of buttons and a pair of sleeves attached to the torso section. The buttons consist essentially of a ceramic material having a strength of at least about 350 MPa and a critical stress-intensity factor of at least 8 $MPam^{\frac{1}{2}}$. In one embodiment, the dress shirt is fabricated from substantially 100% cotton. The buttons of the shirt are preferably coated with a silicone-based coating pursuant to the method claimed herein to give desired protection from discoloration caused by abrasion with conventional washing machines.

Brief Description of the Figures

Fig. 1 illustrates a cutaway side view of a button in accordance with the present invention.

Fig. 2 illustrates a top view of a button in accordance with the present invention.

Fig. 3 shows a flow diagram indicating the present method of coating a ceramic material.

Description of Preferred Embodiments

The present invention is directed to a method for coating a ceramic material, particularly ceramic bodies, such coating preferably having a low-coefficient of friction, high hardness, detergent resistance and significant temperature resistance. The present applicants have discovered that a combination of commercial silicone with an effective amount of a coupling agent provides a coating having desired qualities which make it particularly suitable for coating ceramic materials, for instance, buttons for articles of clothing. It has also been discovered that by coating ceramic material with a silane coating, followed by an additional coating of silicone, desired abrasion resistance characteristics can also be attained. Uses for the present invention include coating ceramic-faced golf clubs, filters, and various other articles where discoloration or abrasion problems may be encountered.

In one particular embodiment of the invention, described in detail below, a ceramic button is provided having high hardness, detergent resistance, high critical stress intensity and significant impact strength.

The ceramic material to be coated in accordance with the present invention can comprise virtually any industrial ceramic known to those skilled in the art. Examples include alumina (Al_2O_3) and zirconia (ZrO_2). Preferred embodiments include stabilized or partially stabilized zirconias, as is discussed hereinbelow.

In one embodiment, the silicone coating of the present invention is applied in the form of a silicone/solvent mixture. A suitable silicone coating will afford sufficient adherence between the ceramic material surface and the coating and will not significantly discolor, scorch or blister upon curing of the coating. A silicone/solvent mixture is preferably selected that maintains a clear appearance after curing operations. A preferred commercial silicone/solvent mixture is available from Dampney Corp., Everett, Maryland, under the trade name Thurmalox No. 2133 Clear, such silicone composition having 22.6% solids by weight with the remainder being solvent.

An effective amount of a coupling agent, preferably a zirconate coupling agent, is added to the silicone/solvent mixture to provide for a coating effective to protect the ceramic material from undesired discoloration or damage due to abrasion with other hard surfaces. It is believed that an effective coupling agent permits cross-linking to occur between the silicone coating and the ceramic material, thereby adhering the coating to the ceramic substrate. While not wishing to be bound by any theory, it is believed that certain chemical reactions occur between the ceramic material and the silicone/coupling agent composition forming chemical cross-linking bonds stronger than mere mechanical adhesion between the coating and the ceramic material. Thus, a suitable coupling agent mixed with the silicone/solvent mixture forms a firmly adhered coating on ceramic material

providing for enhanced abrasion resistance after curing of such coating. A suitable zirconate coupling agent is available from Kenrich Petrochemical, Bayonne, New Jersey, and is available under the trade name NZ33. Preferred coupling agents are selected from the group of neo-alkoxy zirconate compositions and a most preferred type is zirconium IV 2,2 (bis-2 propenolatomethyl) butanolato, tris 2-methyl-2-tropenoato-0.

In other embodiments, either the ceramic material itself or the silicone coupling agent coating may be of a particular desired color. Alternatively, a desired coloring agent may be added either to the ceramic material or to the silicone coating itself to provide for a ceramic body having desired color characteristics.

Referring now to Figure 3 and pursuant to the method of the present invention, an effective amount of a suitable coupling agent 20 is mixed with silicone/solvent mixture 22, preferably under constant agitation, to provide for a substantially homogenous silicone/coupling agent solution 24. An effective amount of coupling agent is that amount that is sufficient to give sufficient bonding between the coating and the ceramic material such that the coating does not substantially separate from the ceramic material during use. In a preferred embodiment, between about .1% and about 1.0% by weight percent, or more preferably between about 0.2% and about 0.4% weight percent of coupling agent is mixed with the silicon solvent. While more coupling agent can be used without

adversely effecting the bonding capability of the silicone/coupling agent composition, the coupling agent is relatively expensive, and so it is preferable to limit the amount used. Preferably the coupling agent is slowly mixed with the silicone solvent for about five minutes to achieve a desired homogenous mixture.

The ceramic material to be coated should first be sufficiently cleaned 26 and dried 28 prior to being coated 30. The ceramic material is preferably cleaned with a suitable cleaning agent which may include a caustic, acidic or organic based cleaner such as a terpene-based cleaner. In a preferred embodiment, a caustic cleaner is used. The cleaned ceramic material is then sufficiently dried, for example, by oven drying at a temperature of about 100°F to about 200°F for between one-half hour and one hour.

It is important that the ceramic material be substantially free of moisture and greases prior to applying the coating of the present invention. If the ceramic material is not sufficiently clean and dry, the coating may not sufficiently adhere to the ceramic surface.

After cleaning and drying, the ceramic material can be coated with the silicone/coupling agent composition by bringing the ceramic material into contact with an appropriate amount of the silicone/coupling agent composition. Effective means for coating include dipping the ceramic material in the silicone/coupling agent

composition or spraying an effective amount of the composition on the ceramic material to be coated. Preferably, the coating composition is sprayed on the ceramic material to a thickness of between about 0.001 inch and 0.005 inch, but may vary dependant upon the specific application to which the ceramic material is to be used. For example, in applications in which mere beautification of the ceramic surface is desired, a thinner coating can be applied, whereas in applications in which considerable physical abrasion may occur, a thicker coating may be applied.

After contacting a desired amount of silicone/coupling agent composition with a ceramic material, the solvent present in the composition is removed 32 by evaporation. The surface can be coated with an airless sprayer to assist in the evaporation of solvent from the coating composition. An airless spraying system is preferred in order to reduce the generation of undesired vapors that may accompany use of an air or gas pressurized spraying system. Solvent evaporating from the silicone/coupling agent composition can be contained in a negative pressurized tube and reclaimed or alternatively can be incinerated.

After sufficient evaporation of solvent from the silicone/coupling agent composition, the coated ceramic material is cured 34 at an effective temperature for an effective amount of time to provide for adequate adherence of the coating to the ceramic material, typically at a

temperature of between about 400°F and 525°F for a time period of between 10 minutes and 1 hour. In a preferred embodiment, ceramic material is cured at a temperature of 475°F for a period of about 20 minutes. After curing, the ceramic material is cooled and is suitable for use. The coated ceramic material produced in accordance with the present method is capable of withstanding temperatures of up to about 525°F without discoloration.

In accordance with a separate embodiment of the present invention, ceramic material cleaned and dried in the manner described above is first coated with an effective amount of a silane composition, the silane composition is cured, a separate silicone composition is applied thereto, and the silicone composition is cured to produce a ceramic material having desired abrasion-resistant characteristics.

A suitable silane material, such as silane A1100 or A1120, can be obtained from Union Carbide in Danbury, Connecticut. Preferably, between about 1% and about 5% by weight of silane material is added to an effective alcohol solvent, preferably comprising isopropyl alcohol. After the silane is dissolved in the solvent, a weight percent of water equal to the amount of silane added previously is added to hydrolyze the silane. The silane hydroxide composition produced is then applied to previously cleaned and dried ceramic material.

The amount of silane composition applied to a ceramic surface should be sufficient to afford appropriate

coverage for the particular purpose intended for the ceramic material. For use as a coating for ceramic buttons, for example, an effective amount of silane composition is applied to provide for a coating thickness of approximately 0.001 inch. After application, the silane composition is air dried for an adequate period of time, preferably about 10 minutes. Thereafter, the silane coated ceramic material is cured at a temperature of between about 80°C and 100°C for a time period of from between about 5 and 30 minutes. Preferably, the silane coating is cured in an oven heated to about 250°F for approximately 15 minutes.

After curing of the silane coating, a silicone composition, with or without coupling agent, can be applied to the coated ceramic material in a manner as described above. In a preferred embodiment, the silicone used to coat the silane-coated ceramic material comprises approximately 22.6% solids by weight, with the remainder being solvent. An effective silicone coating composition can be obtained from Dampney Corp., Everett, Maryland, under the trade name Thurmalox™. Any desired thickness of silicone coating can be applied to the ceramic material dependent upon the particular application for which the ceramic material is to be used. For example, ceramic buttons are preferably coated with between about .001 inch and about .005 inch silicone coating.

The silane and silicone coating compositions are preferably applied onto ceramic material in one or more spray coatings.

It will be understood by those skilled in the art that while the method particularly described below is directed to the coating of ceramic buttons, such method has equal application to the coating of ceramic materials and bodies in general. In accordance with this embodiment, an effective amount of coupling agent is mixed directly with a silicone-containing mixture and a desired amount of the resulting composition is applied to buttons, preferably buttons comprising ceramic material, after such buttons are fired and tumbled in a high energy tumbler in order to remove any sharp edges. It is preferable to remove any sharp edges from surfaces to be coated to ensure the uniform thickness of the coating layer and to allow better overall adherence of the coating to the ceramic material. In a preferred embodiment, buttons are tumbled for about 80 minutes at a high speed of rotation. Buttons are then sorted and dried in an oven for one-half hour to one hour at a temperature of approximately 100°F. The buttons are sorted to ensure that they are not stuck together, bent or warped and are then cleaned with a suitable caustic cleaning agent. In one embodiment, buttons are cleaned for about five minutes with an undiluted solution of Duraclean™, available from W.R. Grace Company, Chicago, Illinois. Preferably, the buttons are placed in an ultra-sonic, heated tank containing the

cleaning agent for several five-minute cycles, inbetween which the buttons are rinsed with heated water. In a most preferred embodiment, seven cleaning and rinsing stages are used with a deionized water rinse being the final stage. Cleaned buttons are then dried at a temperature of from about 200°F to about 250°F until sufficiently dry. These dried buttons are transferred to a coating station where the buttons are oriented on their proper side and are sprayed with a desired amount of the above-described silicone/coupling coating or silane and silicone coating compositions. In the coating of ceramic buttons, while all surfaces of the button can be coated, only the front and sides of the button need be coated to protect the buttons from exterior abrasion and/or discoloring forces. Following airless spraying to evaporate solvent in the coating, the coated buttons are preferably oven cured at a temperature of 475°F for a period of about 20 minutes. Once cured, the buttons can be cooled and boxed for shipment.

One aspect of the present invention is directed to a button fabricated from a ceramic material that is particularly useful for clothing. The ceramic material preferably has sufficient strength to remain intact when subjected to high stress, is highly resistant to heat, and is highly resistant to degradation when subjected to chemicals such as cleaning solvents, and the like.

The ceramic material preferably has sufficiently high strength and fracture toughness such that there is

a high probability of survival under severe stress. Such severe stress can occur, for example, when a shirt is pressed in a commercial press or tumbled in a hot dryer. An acceptable ceramic material preferably possesses a tensile strength, measured according to ACMA Test No. 4, of more than about 250 MPa, preferably more than about 300 MPa, and most preferably more than about 350 MPa. The ceramic material has a critical stress intensity factor of greater than about 3 to 4 $MPam^{1/2}$, preferably greater than about 6 $MPam^{1/2}$, more preferably greater than about 8 $MPam^{1/2}$, and most preferably greater than about 12 $MPam^{1/2}$. The critical stress intensity factor can be measured according to the single-edge notched beam (SENB) test, as described in Evans, A. G., "Fracture Mechanics Determinations" in Fracture Mechanics of Ceramics, Volume 1, edited by R. C. Bradt, D.P.H. Hasselman and F.F. Lange, Plenum Press, N.Y., pg. 17, (1974), incorporated herein by reference in its entirety.

Examples of ceramic materials which can preferably be used in producing the ceramic button according to the present invention include zirconias, particularly partially stabilized zirconias, such as magnesia-, calcia-, yttria- or ceria-partially stabilized zirconias. Examples of these materials are described in: European Patent Application No. 8030025.6, Publication No. 0013599, filed March 1, 1980 by Commonwealth Scientific and Industrial Research Organization; U.S. Patent No. 4,067,745, by Garvie et al., issued January 10, 1978,

entitled "Ceramic Materials"; U.S. Patent No. 4,885,266 by Hughan et al., issued December 5, 1989, entitled "Zirconia Ceramic Materials and Method for Making Same"; and Canadian Patent No. 1,154,793, by Otagiri et al., issued November 4, 1983, entitled "Zirconia Ceramics and Method of Producing the Same." All of the foregoing documents are incorporated herein by reference in their entirety.

A preferred method for fabricating magnesia-partially stabilized zirconia according to the present invention is described in U.S. Patent No. 4,939,996, by Dinkha et al., incorporated herein by reference in its entirety.

In this method, sufficient magnesium oxide or a material capable of forming magnesium oxide such as magnesium carbonate, is combined with the zirconium dioxide powder to provide an effective magnesium oxide level in the ceramic of from about 2.6 to about 3.8 weight percent. These mixed powders are preferably calcined between about 1000°C and about 1700°C, more preferably between about 1000°C and about 1500°C, for between about 4 and about 12 hours, preferably from about 6 to about 10 hours. The resulting calcined mixture is wet milled until the average particle size is preferably between about 0.8 and 2.5 micrometers, more preferably about 1.5 micrometers. If needed, a sufficient amount of fugitive organic binder is added to allow formation of a compact green body. The amount needed depends on the

method of formation and the particular binder used. Ordinarily the level of the binder is between about 0.1 and about 7 weight percent of the calcined mixture with the preferred level being about 1.5 to about 2.8 percent. The mixture is then dried by evaporation of the water, preferably by spray drying. The dried powder is then formed into a compact of the desired shape, such as a button having four thread holes, preferably by dry pressing. Dry pressing will permit the button to have a contour and/or ridge, if desired.

The formed compact is then heated from ambient temperature at a rate of between about 25°C per hour and about 250°C per hour, preferably about 100°C per hour, to a soak temperature of between about 1675°C and about 1800°C, preferably between about 1700°C and 1750°C. This soak temperature is held for between about 1 and about 10 hours, preferably from about 2 to about 6 hours. The sintered article is then cooled using a cooling procedure such as described in Robert R. Hughan, "Precipitation During Controlled Cooling of Magnesia-Partially Stabilized Zirconia," J. Am. Ceram. Soc. 69, 556-563 (1986), incorporated herein by reference in its entirety. A preferred procedure involves cooling the sintered body at a rate of between about 250°C and about 800°C per hour, preferably between about 350°C and about 500°C per hour, to a temperature between about 800°C and about 1400°C, preferably between about 800°C and about 1000°C.

The sintered article can then be furnace cooled to room temperature.

The sintered ceramic buttons according to the present invention can be polished in, for example, a geo-centrifugal polisher to give the ceramic buttons a smooth and pleasing surface finish.

Other materials that can be useful for producing the button according to the present invention include alumina, alumina-zirconia composites (Al_2O_3-ZrO_2) having 5 to 90 weight percent ZrO_2 and 10 to 95 weight percent Al_2O_3, the ZrO_2 fraction containing from 0 to 6 weight percent Y_2O_3; and SiC whisker-reinforced ceramics, e.g., SiC whisker-reinforced alumina or SiC whisker-reinforced mullite.

It has been found that magnesia-partially stabilized zirconia is less susceptible to flawing from stresses typically incurred during use than, for example, yttria-partially stabilized zirconia. Magnesia-partially stabilized zirconia has increased critical stress-intensity values (K_{IC}) for millimeter-scale flaw sizes, when compared with yttria-partially stabilized zirconia, even though yttria-partially stabilized zirconia is often superior for small flaw sizes. Thus, magnesia-partially stabilized zirconia is a preferred ceramic material for use in the button. An example of magnesia-partially stabilized zirconia is transformation-toughened zirconia (TTZ) produced by the Coors Ceramics Company, Golden, Colorado, having a tensile strength at 25°C (ACMA Test

No. 4) of about 352 MPa and a critical stress-intensity factor (single edged notched beam test) of at least about 8 $MPam^{1/2}$.

Partially stabilized zirconias are particularly useful since very low structural failure rates are desired, such as on the order of less than a few parts per million. It has been found that the preferred zirconia materials, such as magnesia-partially stabilized zirconia, may have a lower average strength than less preferred materials when analyzed at a high failure rate level such as 50 percent, but that these same preferred materials will provide a better average strength when analyzed at a lower level of failure rate, such as 5 to 100 parts per million, or less. That is, when articles fabricated from the preferred materials are subjected to the stress levels typically encountered by a button, the probability of failure (breakage) will be very low.

Zirconia materials provide an additional advantage according to the present invention, since these materials sinter to a white or substantially white finish. This is desirable since the largest percentage of buttons produced for the clothing industry have a white or substantially white color. As used herein, the term substantially white includes shades such as ivory.

One advantage to using an alumina based ceramic for the ceramic button according to the present invention, is that the alumina is more readily colored than other materials. For example, small amounts of rare earth

oxides or other metal oxides can be added to the alumina without substantially changing the strength characteristics of the material. Zirconia materials, particularly magnesia-partially stabilized zirconia, are difficult to color without applying an external coating.

Figures 1 and 2 depict an embodiment of a button 10 according to the present invention. The button includes holes 14 useful for attaching the button to an article of clothing. The button is also contoured and has a ridge 16 for a pleasing aesthetic appearance.

The buttons of the present invention have been tested to compare their properties to buttons of the prior art. The results of this test are shown in Table I.

TABLE I

Button Type	Impact Test (oz./in.)	Compression Test (lb.)
Plastic 4-hole	5.35	1850
Plastic 2-hole	4.95	2058
Ceramic	30.52	2401

The impact strength is measured by a swing-arm test. The compression test is performed on a laboratory press equipped with two self-aligning flat plates. The button being tested is centered on a lower plate and pressure is applied. The first audible crack indicates part failure.

Table I shows that a ceramic button according to the present invention can have an impact strength of almost

six times the impact strength of the plastic buttons. The compressive strength of the ceramic button shows an increase of from 17 to 30 percent over the prior art.

The buttons were also tested in a washing and pressing operation. The ceramic buttons and plastic buttons were attached to two test shirts, and then washed and pressed on nine different washer/press set-ups. This was done to evaluate each button when processed through variations in wash, as well as press conditions.

The shirts were monitored for button breakage at each wash and press cycle for fracturing. Both the first and second fracture of a plastic button occurred at the first pressing step, in a 13 ligne (0.325 inch diameter) collar button. Comparatively, the first fracture of one ceramic button according to the present invention occurred in a 13 ligne button on the fifteenth washing. No additional fracturing of any other ceramic buttons was detected for 32 consecutive cycles, and the test was stopped due to shirt deterioration. Thus, the buttons according to the present invention will often outlive the shirt on which they are sewn.

The buttons according to the present invention are stronger than typical mass produced buttons that are presently available and are highly resistant to detergents and cleaning solvents used in present commercial cleaning processes.

In experimental tests, buttons coated with the silicone/coupling agent composition of the present

invention withstood rigorous tests performed in commercial washing machines without showing undesired discoloration or chipping. The present invention satisfies a long-felt need by the clothing industry for a button having these characteristics.

While various embodiments of the present invention have been described in detail, it is apparent that modifications and adaptations of those embodiments will occur to those skilled in the art. However, it is to be expressly understood that such modifications and adaptations are within the spirit and scope of the present invention.

What is claimed is:

1. A composite comprising ceramic material coated with a silicone composition containing an effective coupling agent.

2. The composite of Claim 1 wherein said silicon composition contains an amount of said coupling agent to sufficiently adhere to said ceramic material.

3. The composite of Claim 1 wherein said coating comprises from about 0.1% to about 1.0% of said coupling agent.

4. The composite of Claim 1 wherein said coating comprises from about 0.2% to about 0.4% of said coupling agent.

5. The composite of Claim 1 wherein said coupling agent comprises a coupling agent selected from the group consisting of silane and zirconate.

6. The composite of Claim 1 wherein said silicone composition is substantially clear.

7. The composite of Claim 1 wherein said coupling agent gives said composition a desired color.

8. The composite of Claim 1 wherein said ceramic material has a strength of at least 250 MPa.

9. The composite of claim 1 capable of withstanding temperatures of up to about 525°F without discoloration of said ceramic material.

10. The composite of Claim 1 wherein said ceramic material has a strength of at least 300 MPa.

11. The composite of Claim 1 wherein said ceramic material has a strength of at least 350 MPa.

12. The composite of Claim 1 wherein said ceramic material has a critical stress-intensity factor of at least about 3 $MPam^{\frac{1}{2}}$.

13. The composite of Claim 1 wherein said ceramic material has a critical stress intensity factor of at least about 6 $MPam^{\frac{1}{2}}$.

14. The composite of Claim 1 wherein said ceramic material has a critical stress intensity factor of at least about 8 $MPam^{\frac{1}{2}}$.

15. The composite of Claim 1 wherein said ceramic material comprises a ceramic selected from a group consisting of zirconia, alumina, alumina-zirconia composites and SiC whisker-reinforced composites.

16. The composite of Claim 1, wherein said ceramic material consists essentially of partially stabilized zirconia.

17. The composite of Claim 1, wherein said ceramic material consists essentially of magnesia-partially stabilized zirconia.

18. The composite as set forth in Claim 1, wherein said ceramic material is a ceramic button.

19. The composite as set forth in Claim 1, wherein said ceramic material is a golf putter.

20. The composite as set forth in Claim 1, wherein said ceramic material is cookware.

21. A coating composition for ceramic material comprising silicone mixed with an effective amount of zirconia-containing coupling agent.

22. A method for coating ceramic material comprising:

a) applying a silicone composition containing an effective amount of coupling agent to a ceramic material; and

b) curing said silicone composition.

23. The method as set forth in Claim 22 further comprising cleaning said ceramic material prior to applying said silicone composition.

24. The method as set for the in Claim 22 wherein said step of cleaning comprises contacting said ceramic material with an acidic, caustic or terpene-based cleaner.

25. The method is set forth in Claim 22 further comprising heating said ceramic material to dry excess moisture from the surface of said ceramic material.

26. The method as set forth in Claim 22, wherein said step of applying an effective amount of said silicone composition comprises dipping said ceramic material in said silicone composition or spraying said silicone composition or said ceramic material.

27. The method as set forth in Claim 22, wherein said coated ceramic material is cured for between about ten minutes and one hour at a temperature of between about 400°F and 525°F.

28. The method as set forth in Claim 27, wherein said coated ceramic material is cured for at least about 20 minutes at about 475°F.

29. The method as set forth in Claim 22, wherein said coupling agent is mixed into said silicone solvent to form a sufficiently homogenous silicone/coupling agent solution.

30. A coated ceramic material produced in accordance with the method of Claim 22.

31. A method as set forth in Claim 22 further comprising polishing said ceramic material prior to said step of applying said coating.

32. The coated ceramic material as set forth in Claim 31 wherein said coating is resistant to temperatures above about 300°F.

33. A method of producing a coated ceramic material comprising:

a) cleaning a ceramic material;

b) drying said cleaned ceramic material;

c) mixing an effective amount of coupling agent with a silicone composition to produce a substantially homogenous silicone/coupling agent composition;

d) coating said cleaned and dried ceramic material with said silicone/coupling agent composition; and

e) curing said silicone/coupling agent composition.

34. A coated ceramic button, comprising a ceramic material having a strength of at least about 250 MPa and a critical stress-intensity factor of at least about 3MPam^{½}, said ceramic material comprising a ceramic selected from the group consisting of zirconia, alumina, alumina-zirconia composites, and SiC wisker-reinforced composites, and said ceramic material having a coating comprising a silicone composition with an effective amount of a zirconate coupling agent dispersed therein.

35. A method of producing a coated ceramic material comprising:

a) applying an effective amount of a silane composition to a ceramic material;

b) curing said silane composition at an effective curing temperature to produce a silane-coated ceramic material;

c) applying at least one coat of a silicone composition to said silane-coated ceramic material; and

d) curing said silicone composition.

36. A coated ceramic material produced in accordance with the method of Claim 35.

37. A method of coating ceramic material comprising:

a) applying to the surface of a ceramic material an effective amount of a silicone composition, said silicone composition having an effective amount of a zirconate coupling agent dispersed therein; and

b) curing said silicone coating at a temperature of about 475°F for about 20 minutes.

38. A button for an article of clothing, said button comprising a ceramic material having a strength of at least about 250 MPa and a critical stress-intensity factor of at least about 3 $MPam^{1/2}$.

39. A button as recited in Claim 38, wherein said ceramic material has a strength of at least about 300 MPa.

40. A button as recited in Claim 38, wherein said ceramic material has a strength of at least about 350 MPa.

41. A button as recited in Claim 38, wherein said ceramic material has a critical stress-intensity factor of at least about 6 $MPam^{1/2}$.

42. A button as recited in Claim 38, wherein said ceramic material has a critical stress-intensity factor of at least about 8 $MPam^{1/2}$.

43. A button as recited in Claim 38, wherein said ceramic material comprises a ceramic selected from the group consisting of zirconia, alumina, alumina-zirconia composites, and SiC whisker-reinforced composites.

44. A button as recited in Claim 38, wherein said button consists essentially of partially stabilized zirconia.

45. A button as recited in Claim 38, wherein said button consists essentially of magnesia-partially stabilized zirconia.

46. A button as recited in Claim 38, wherein said button is substantially white.

47. A button as recited in Claim 38, wherein said button has an impact strength of at least about 30 oz./in.

48. A button for an article of clothing, wherein said button consists essentially of a ceramic material having a strength of at least about 300 MPa, and a critical stress-intensity factor of at least about 6 $MPam^{1/2}$, wherein said ceramic is resistant to deterioration from dry-cleaning solvents and detergents.

49. A button as recited in Claim 48, wherein said ceramic material consists essentially of partially stabilized zirconia.

50. A button as recited in Claim 48, wherein said button consists essentially of magnesia-partially stabilized zirconia.

51. A button as recited in Claim 48, wherein said ceramic material has a strength of greater than about 350 MPa and a critical stress-intensity factor of greater than about 8 $MPam^{1/2}$.

52. A button for a dress-shirt, wherein said button consists essentially of magnesia-partially stabilized zirconia having a strength of greater than 350 MPa and a critical stress-intensity factor of greater than about 8 $MPam^{\frac{1}{2}}$, wherein said button is substantially white.

53. A dress shirt, comprising:

(a) a torso section including a plurality of buttons for buttoning said shirt; and

(b) a pair of sleeves attached to said torso section;

wherein said buttons consist essentially of a ceramic material having a strength of at least about 350 MPa and a critical stress-intensity factor of at least about 8 $MPam^{\frac{1}{2}}$.

54. A dress shirt, as recited in Claim 53, wherein said dress-shirt is fabricated from substantially 100 percent cotton.

55. A dress shirt as recited in Claim 54, wherein said ceramic is selected from the group consisting of partially stabilized zirconia, alumina-zirconia composites and silicon carbide whisker reinforced composites.

56. A dress shirt as recited in Claim 55, wherein said button consists essentially of partially stabilized zirconia.

FIG. 1

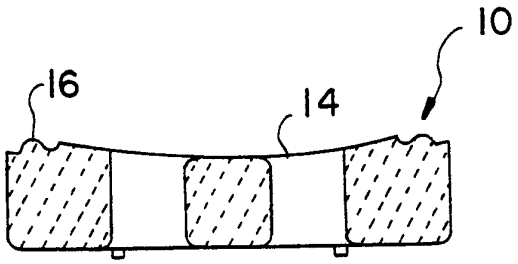

FIG. 2

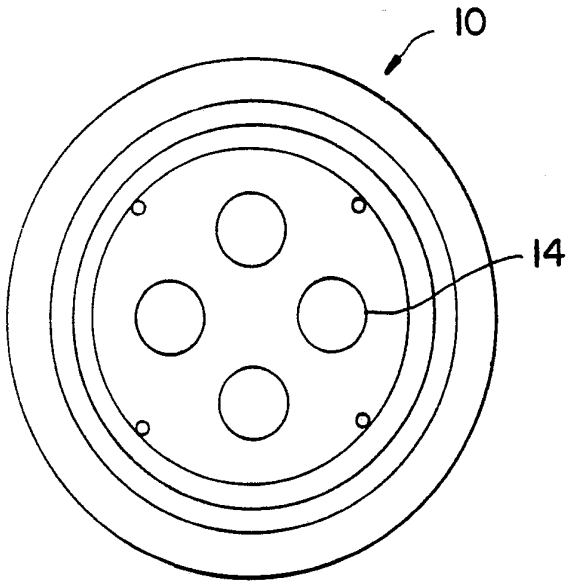

FIG.3

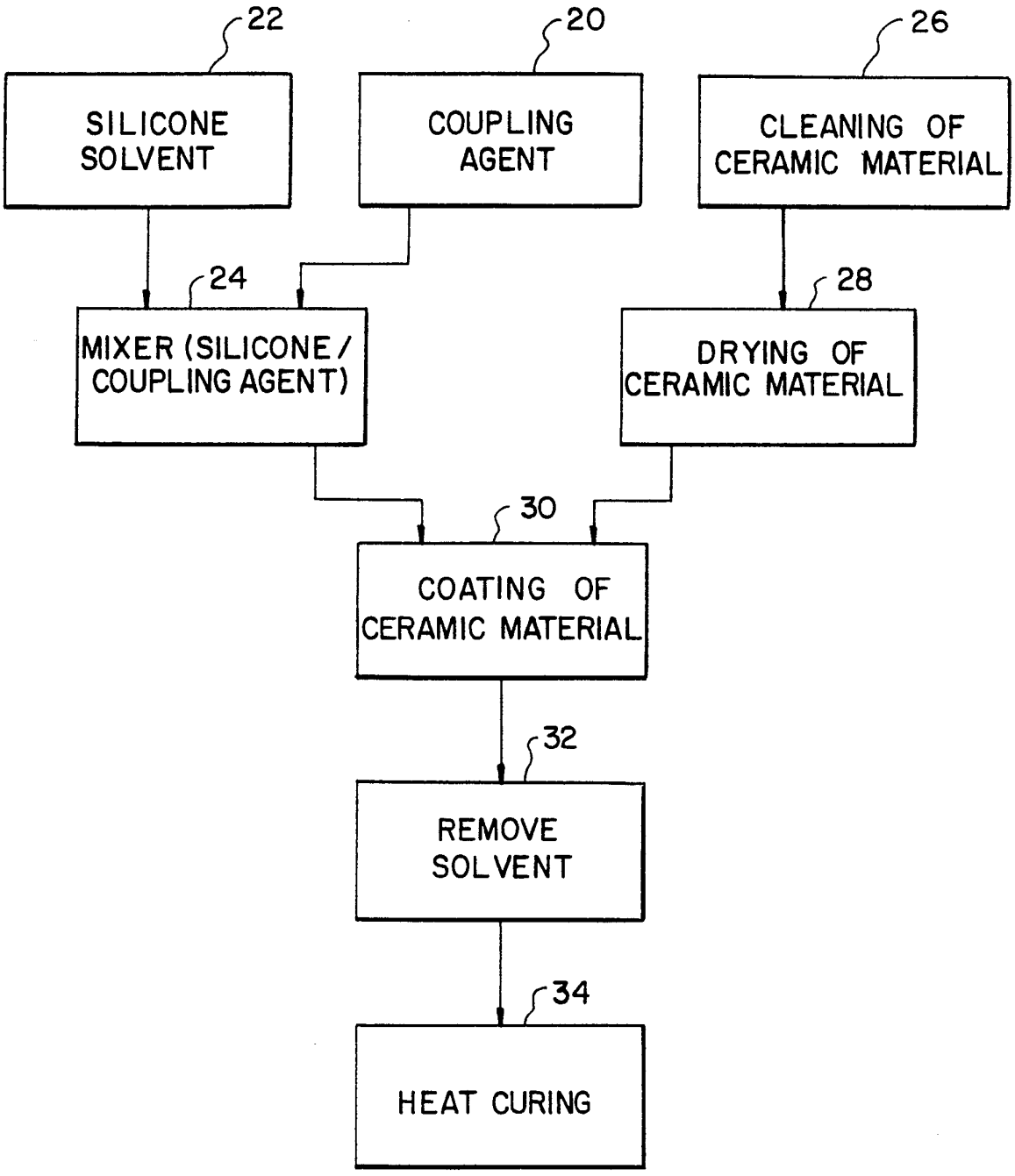
22
20
26
SILICONE SOLVENT
COUPLING AGENT
CLEANING OF CERAMIC MATERIAL
24
28
MIXER (SILICONE / COUPLING AGENT)
DRYING OF CERAMIC MATERIAL
30
COATING OF CERAMIC MATERIAL
32
REMOVE SOLVENT
34
HEAT CURING