No. 805,783. PATENTED NOV. 28, 1905.

J. S. DORIAN.

ELECTRIC FURNACE.

APPLICATION FILED MAR. 27, 1905.

Fig. 1.

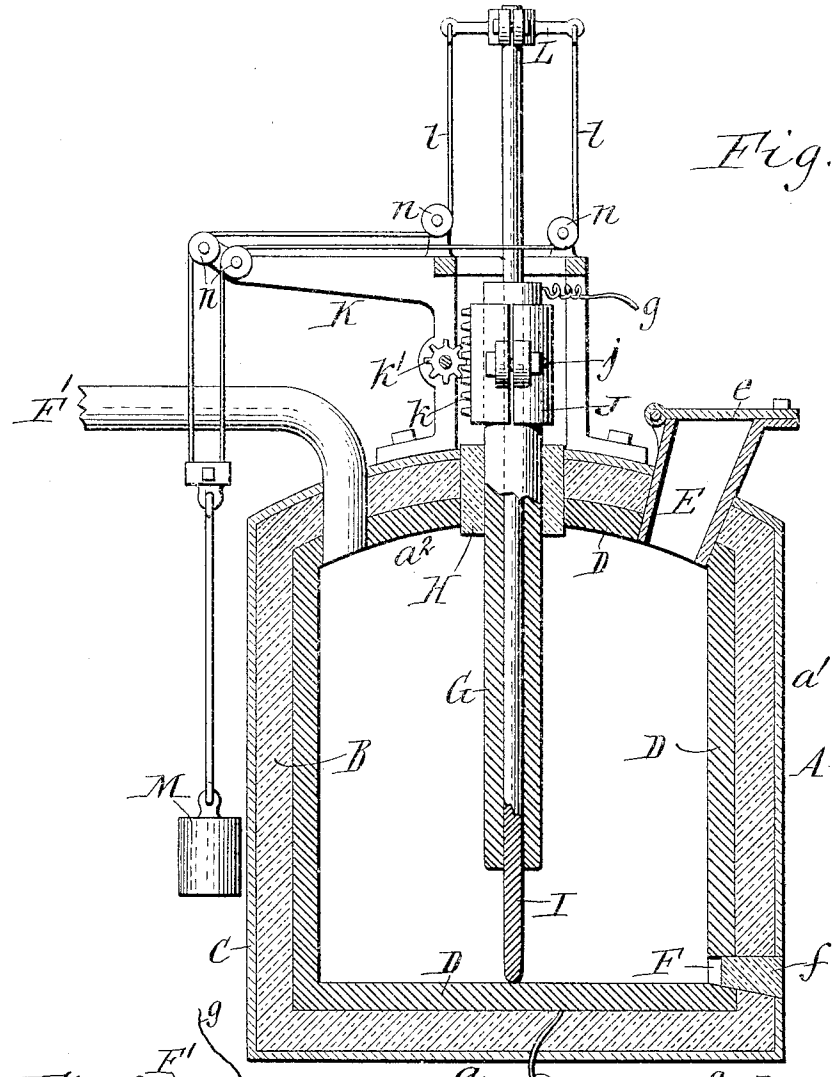

Fig. 2.

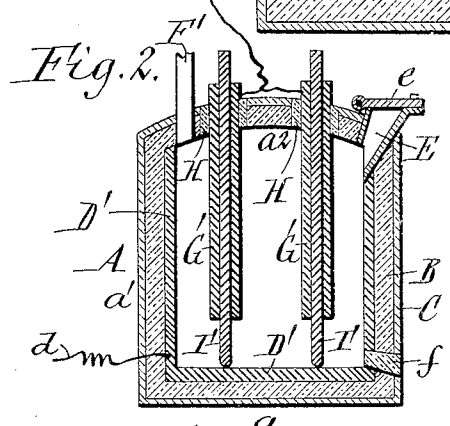

Fig. 3.

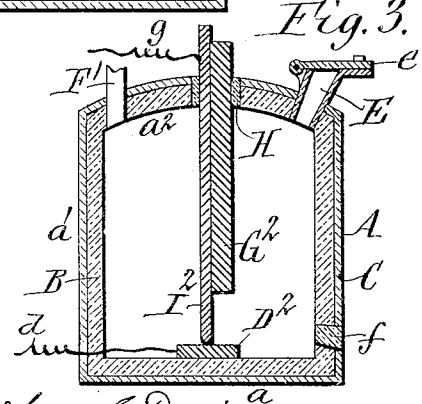

Witnesses.
Louis W. Gratz.
Emma M. Graham.

Inventor
John S. Dorian
by Geyer & Popp
Attorneys.

UNITED STATES PATENT OFFICE.

JOHN S. DORIAN, OF NIAGARA FALLS, NEW YORK, ASSIGNOR TO CORA M. DORIAN, OF NIAGARA FALLS, NEW YORK.

ELECTRIC FURNACE.

No. 805,783. Specification of Letters Patent. Patented Nov. 28, 1905.

Application filed March 27, 1905. Serial No. 252,148.

To all whom it may concern:

Be it known that I, JOHN S. DORIAN, a citizen of the United States, residing at Niagara Falls, in the county of Niagara and State of New York, have invented a new and useful Improvement in Electric Furnaces, of which the following is a specification.

This invention relates more particularly to an electric furnace in which the heat is developed by incandescence instead of by an arc.

The principal objects of this invention are to produce a furnace of this character which permits of varying the heat to suit the material under treatment, either before starting the furnace or while the same is in operation, and which permits the incandescent element when broken or consumed to be replaced while the furnace is in operation, thus avoiding the necessity of interruption in the heating process.

In the accompanying drawings, Figure 1 is a vertical section of an electric furnace embodying my improvements. Figs. 2 and 3 are similar views showing modifications of my invention.

Similar letters of reference indicate corresponding parts in the figures.

The form of the heating-chamber A of the furnace may be varied to suit the requirements of the material to be treated. The chamber shown in Fig. 1 of the drawings consists of a flat bottom *a*, vertical walls *a'*, and an arched top a^2. This inclosure of the furnace-chamber is composed of an insulating-body B, of brick or similar material, a covering, shell, or casing C, of sheet metal, on the outer side of the body, and a lining D, of graphite, carbon, or similar material, on the inner side of the body. The material to be heated is introduced into the top of the chamber by a hopper, funnel, or spout E, which is normally closed by a cover *e*, and the contents of the chamber are removed through a tap-hole F at the bottom, which is normally closed by a plug *f*. The gases generated by the heating of the material in the chamber are carried off by a pipe F', connecting with the top of the chamber. The carbon lining of the chamber forms one terminal or electrode of an electric circuit and is connected with the generator or dynamo by a wire *d*. G represents the other terminal or electrode of the electric circuit, the same being connected with the generator or dynamo by a wire *g*. The electrode G is constructed of carbon or graphite in the form of a tube and slides vertically through the central part of the furnace-top, but is insulated from the adjacent electric conductors by a bushing or sleeve H, of brick, tile, or similar material. Within this upper tubular electrode is arranged a resistance member I, which is constructed of carbon or other conducting material in the form of a slender rod or pencil and fits snugly in the upper electrode, but is capable of sliding vertically therein. As shown in Fig. 1, the lower end of the upper electrode is arranged some distance above the lower electrode, at the bottom of the chamber, and the resistance member projects from the lower end of the upper electrode into engagement with the lower electrode. The upper electrode and that part of the resistance member inclosed thereby together serve as a conductor for the electric current above the exposed part of the resistance-rod; but the uninclosed part of the resistance member or pencil interposed between the electrodes serves as the sole conductor of the electric current from one electrode to the other. The current when thus confined to a small or narrow conductor causes the same to be heated to a state of incandescence, the heat thus generated being transmitted to the material confined in the chamber. When the material to be treated requires only a moderate amount of heat, the upper electrode is raised so as to increase the length of the exposed part of the resistance member in the chamber, thereby reducing the heating effect of the same; but if a higher temperature is required the upper electrode is lowered, so as to reduce the length of the exposed part of the resistance member, whereby the heating effect of the current passing through the same is increased. By thus adjusting the upper electrode lengthwise of the resistance member and exposing more or less of the same the internal resistance of the furnace can be altered at will, and the heat may be regulated so as to be most effective at the very bottom of the chamber or diffused over a greater portion portion of the same. The intensity of the heat may be regulated by varying the amount of current flowing through the resistance member. By varying the effective length of

the resistance member and also varying the amount of current the degree of heat is absolutely under control and may be diffused over a large area or concentrated into a small area to suit the requirements of the material under treatment. This is particularly desirable for producing certain reactions in which it is necessary to maintain a definite temperature. If the exposed part of the resistance member burns off or becomes broken, the same is replaced by sliding it downwardly in the upper electrode until it again engages with the lower electrode, this being possible without the necessity of removing the material from the furnace. The furnace can therefore be run continuously, as no annoying delays or interruptions while heating a charge of material can occur. Inasmuch as there is less electrolytic action when heating by means of a resistance instead of by an arc, the life of the electrode is prolonged. Furermore, it is possible by this means to easily heat highly-resistant or non-conducting materials, the insulating properties of the same having no effect on the carrying of the current, as would be the case in an arc-heated furnace.

Various means may be employed for adjusting the upper electrode and feeding the resistance member downwardly when necessary. The means shown in the drawings for this purpose are constructed as follows: J represents a holder or sleeve which embraces the upper end of the upper electrode, but is insulated therefrom. This sleeve is capable of lengthwise adjustment on the upper electrode and is clamped in position thereon by splitting the same and connecting the split parts by a screw *j*, as shown in Fig. 1. On one side the clamping-sleeve is provided with a gear-rack *k*, which is engaged by an adjusting-pinion *k'*. The latter is mounted on a frame K above the furnace and may be turned by any suitable means for shifting the gear-rack and the upper electrode connected therewith.

The downward movement of the resistance member to compensate for the burning or breaking of its lower end is preferably effected automatically by means of a detachable yoke or cross-head L applied to the upper end of the resistance pencil or rod, a pair of draft cords or cables *l l*, connected at their upper ends with the yoke on opposite sides thereof, a weight M, connected with the lower ends of the cables, and guide-pulleys *n n*, around which the intermediate parts of the cables pass. As the lower end of the resistance-rod becomes consumed by burning or in case it should be broken the pressure of the weight M against the upper end of the rod causes the same to be instantly and automatically pushed downwardly the required extent for restoring the normal condition of the resistance-rod, thereby resuming the heating operation immediately without any perceptible interruption and avoiding spoiling of a batch of material which would be the case if the furnace had to be emptied or broken down for replacing the resistance member.

It is not necessary for the resistance member to be formed in one continuous piece, as it is possible to employ small sections which bear against each other end to end in the upper tubular electrode, nor is it necessary for the resistance member to extend above the tubular electrode, as such projecting part can be constructed of any suitable material, so as to bear in the manner of a plunger or follower against the carbon part of the resistance member within the tubular electrode. By employing the last-mentioned construction the yoke may be permanently attached to that part which forms an extension of the resistance member above the tubular member.

Instead of extending the lower electrode around the entire inside of the furnace, as shown in Fig. 1, the same may be confined to the side walls and bottom, as shown at D' in Fig. 2.

If desired, the interior of the furnace-chamber may be constructed wholly of brick or other non-conducting material excepting at its bottom, where a plate-like electrode D^2, of carbon or other conducting material of small area, may be arranged for coöperation with the other electrode and resistance member, as shown in Fig. 3. By this means either a direct or alternating current may be used while treating material on which it is not desired to act electrolytically, and any degree of heat may be obtained in a greater or smaller part of the furnace, as desired, with a minimum of electrolytic action. When a greater volume of heat is required, or when it is necessary to distribute the heat more uniformly throughout the entire furnace, a plurality of resistance members and companion electrodes may be used. A furnace embodying such an organization is illustrated in Fig. 2, in which two resistance-rods I' I' are employed, each of which is arranged within a tubular upper electrode G' and cooperates with the lower electrode at the bottom of the furnace. It is also immaterial whether the upper electrode is constructed in the form of a tube and the resistance member arranged within the same, because the electrode and resistance may be arranged side by side, as shown at G^2 I^2 in Fig. 3.

My improved electric furnace is far superior to one in which an arc is employed, because there is no danger of losing the arc, with the attendant inconvenience and delay of emptying and refilling the furnace for restoring the arc. Moreover, the furnace can be run more evenly, and consequently with less danger to the generators, transformer, and conductors. A lower voltage can also be used than is practicable in an arc-furnace,

thereby lessening the liability of leakage and danger to the operatives handling the furnace.

I claim as my invention—

1. An electric furnace comprising a heating-chamber, a pair of electrodes arranged in the chamber, and a resistance member electrically connecting said electrodes, one of said electrodes being movable lengthwise of the resistance member for varying the extent of its exposure or its heating effect, substantially as set forth.

2. An electric furnace comprising a heating-chamber, a pair of electrodes arranged in said chambers one of which is stationary while the other is movable toward and from the stationary one, and a resistance member engaging endwise at one end with one of said electrodes while its opposite end engages sidewise with the other electrode, said movable electrode being adjustable lengthwise of the resistance member for varying the extent of its exposure or its heating effect, substantially as set forth.

3. An electric furnace comprising a heating-chamber, a pair of electrodes arranged in said chamber, one of which is stationary while the other is movable toward and from the stationary one and constructed of tubular form, and a resistance member having the form of a rod which is arranged at one end in said tubular electrode and bears at its opposite end against the other electrode, substantially as set forth.

4. An electric furnace comprising a heating-chamber, a pair of electrodes one of which is stationary and arranged on the bottom of the chamber while the other is of tubular form and movable through the top of said chamber toward and from the stationary electrode, and a resistance member arranged at one end in said movable tubular electrode and engaging at its opposite end with the stationary electrode, substantially as set forth.

5. An electric furnace, comprising a heating-chamber, a pair of electrodes arranged in the chamber, and a resistance member contacting with one of said electrodes and movable thereon to engage the other electrode, substantially as set forth.

6. An electric furnace, comprising a heating-chamber, a pair of electrodes arranged in the chamber, a resistance member connecting said electrodes, and means for automatically moving said resistance lengthwise of one of said electrodes and into engagement with the other electrode, substantially as set forth.

7. An electric furnace comprising a heating-chamber, a pair of electrodes arranged in the chamber, a resistance member connecting said electrodes, and means for automatically moving said resistance lengthwise of one of said electrodes and into engagement with the other electrode comprising a draft-cable connected at one end with said resistance member and at its opposite end with a weight, substantially as set forth.

8. An electric furnace comprising a heating-chamber, a pair of electrodes one of which is stationary and arranged on the bottom of the chamber while the other is of tubular form and extends through the top of the chamber, a resistance member constructed in the form of a rod which is arranged in said tubular electrode and bears at its inner end against said stationary electrode, and means for automatically moving said resistance member lengthwise of the tubular electrode and toward the stationary electrode comprising a cable connected at one end to the upper end of said resistance member, a weight connected with the opposite end of said cable, and guide-pulleys for the intermediate part of said cable, substantially as set forth.

9. An electric furnace comprising a heating-chamber, a pair of electrodes arranged in said chamber, one of said electrodes being stationary while the other is movable toward and from the stationary one, and a resistance member movable at one end lengthwise of the movable electrode and adapted to engage at its opposite end with the stationary electrode, substantially as set forth.

Witness my hand this 24th day of March, 1905.

JOHN S. DORIAN.

Witnesses:

THEO. L. POPP,

EMMA M. GRAHAM.