(12) INTERNATIONAL APPLICATION PUBLISHED UNDER THE PATENT COOPERATION TREATY (PCT)

(19) World Intellectual Property Organization
International Bureau

(43) International Publication Date
09 January 2025 (09.01.2025)

WIPO | PCT

(10) International Publication Number
WO 2025/008807 A1

(51) International Patent Classification:
B65G 15/00 (2006.01) *H05K 13/00* (2006.01)
B65G 39/00 (2006.01) *B65G 17/06* (2006.01)
B65G 37/00 (2006.01)

(21) International Application Number:
PCT/IL2024/050610

(22) International Filing Date:
23 June 2024 (23.06.2024)

(25) Filing Language: English

(26) Publication Language: English

(30) Priority Data:
304185 02 July 2023 (02.07.2023) IL

(72) Inventor; and
(71) Applicant: **TORJMAN, Niyya** [IL/IL]; 1/17 Menakhem Dunkelblum St., 8450130 Be'er Sheva (IL).

(72) Inventor: **TUGUSHEV, Marat**; 7/13 Yohanna Jibotinski St., 8425807 Be'er Sheva (IL).

(81) Designated States *(unless otherwise indicated, for every kind of national protection available)*: AE, AG, AL, AM, AO, AT, AU, AZ, BA, BB, BG, BH, BN, BR, BW, BY, BZ, CA, CH, CL, CN, CO, CR, CU, CV, CZ, DE, DJ, DK, DM, DO, DZ, EC, EE, EG, ES, FI, GB, GD, GE, GH, GM, GT, HN, HR, HU, ID, IL, IN, IQ, IR, IS, IT, JM, JO, JP, KE, KG, KH, KN, KP, KR, KW, KZ, LA, LC, LK, LR, LS, LU, LY, MA, MD, MG, MK, MN, MU, MW, MX, MY, MZ, NA, NG, NI, NO, NZ, OM, PA, PE, PG, PH, PL, PT, QA, RO, RS, RU, RW, SA, SC, SD, SE, SG, SK, SL, ST, SV, SY, TH, TJ, TM, TN, TR, TT, TZ, UA, UG, US, UZ, VC, VN, WS, ZA, ZM, ZW.

(84) Designated States *(unless otherwise indicated, for every kind of regional protection available)*: ARIPO (BW, CV, GH, GM, KE, LR, LS, MW, MZ, NA, RW, SC, SD, SL, ST, SZ, TZ, UG, ZM, ZW), Eurasian (AM, AZ, BY, KG, KZ, RU, TJ, TM), European (AL, AT, BE, BG, CH, CY, CZ, DE, DK, EE, ES, FI, FR, GB, GR, HR, HU, IE, IS, IT, LT, LU, LV, MC, ME, MK, MT, NL, NO, PL, PT, RO, RS, SE, SI, SK, SM, TR), OAPI (BF, BJ, CF, CG, CI, CM, GA, GN, GQ, GW, KM, ML, MR, NE, SN, TD, TG).

Published:
— *with international search report (Art. 21(3))*

(54) **Title:** PRECISE CONVEYOR

(57) **Abstract:** A transferring-positioning device for conveying a plate-type-article comprises at least a pair of the spaced apart positioning transporters defining a transferring-positioning path therebetween. Each positioning transporter comprises an endless-rotating carrier, a linearly arranged plurality of the rotating positioning-transferring drivers having a rotational axis perpendicular to the conveyance path each, each positioning-transferring driver comprising axially bottom-up arranged: (i) a driving means configured for engaging with an inner side of the carrier, and (ii) a positioning-transferring roller of the given diameter and rotation surface of the respective angle texturing. The rotating positioning-transferring drivers and endless rotating carriers belonging to opposite positioning transporters are arranged such that side edges of the plate¬ type workpiece when placed onto top sides of the carriers-means are in frictional contact therewith and with the rotation surfaces of the positioning-transferring rollers. The side edges of the plate-type workpiece, being in frictional contact with the rotation surface with respective angle texturing, slide to the top sides of the carriers-means, whereby preventing the conveyance deviations of the plate-type workpiece in the transferring-positioning path.

WO 2025/008807 A1

Precise conveyor

FIELD OF INVENTION

The present invention relates to a conveyor for precisely positioning plate-type-workpieces such as at least printed circuit boards during the conveying thereof in production lines.

BACKGROUND OF THE INVENTION

Nowadays, the known conveyors for conveying plate-type-articles, particularly, printed circuit boards (PCB) typically comprise a pair of spaced-apart linear guides each having an endless rotating carrier-means. The plate-type-workpieces are conveyed within the path defined by the aforesaid spaced-apart linear guides.

Usually, the endless rotating carrier-means constitutes a transmission belt or a roller chain driven by rotating driving means such as pulleys or sprockets. These carrier-means are determined by the engineering parameters: the rotation axis, thickness, the opposite inner side and outer side, and the relative top side and bottom side. In accordance to prior art only inner side and outer side are applied for conveyance. The transmission belts or chains are mounted on pulleys or sprockets for driving by the inner side; the outer side is applied for disposing thereon the conveying workpieces; as inner side as outer side are applied for tension of the carrier-means. The prior art conveyance design defines the parallelism of the rotating axis of the known carrier-means and conveyance plane.

It should be noted that parallelism of the conveying plane and rotating axes of pulleys or sprockets defines a conceptual positioning problem because of runout of the belt or chain caused by indispensable pulley/sprocket wobbling. Therefore, during performing accurate operations such as laser marking, PCB assembling, automated optical inspection, the conveyor is stopped, and the workpiece is clamped. The movement continues after performing the accurate operation.

US4874081 discloses a device for transferring printed circuit boards, comprising: a pair of spaced apart, endless roller chains each guided by a guide rail to define a printed circuit board transferring path therebetween; a plurality of support members fixed to said chains for movement therewith and each adapted to support thereon a side edge portion of a printed circuit board, so that the printed circuit board can be transferred along said path with opposite side edge portions thereof being supported on the support members; a clamp plate member pivotally

mounted on each of said support members and adapted to move between a close position where said clamp plate member is engageable with an upper surface of the side edge portion of the printed circuit board supported on the support members and an open position where said clamp plate member is incapable of engaging with the printed circuit board; means provided on each of said support members for urging the corresponding clamp plate member to rotate so that the clamp plate member is normally maintained in the open position; and engaging plates fixed to each of said guide rails and having a lower surface engageable with upper surfaces of the clamp plate members to maintain the clamp plate members in the close positions, whereby the printed circuit board supported on the supporting members is clamped between the supporting members and the clamp plate members during the engagement of the clamp plate members with the engaging plates.

US7281623 discloses a transport system for conveying articles along conveyance paths including straight, curvilinear, and horizontal, inclined and declined conveyance sections. The articles are conveyed between a pair of vertical belts while being supported by protrusions extending from the vertical belts. The vertical belts are guided using a multiplicity of vertical rollers that are configurable into straight, curvilinear and dynamically changing conveyance sections. Multiple conveyance sections can be joined end to end to transport articles over complex paths and over long distances. The articles conveyed may include semiconductor wafers.

The plate-type-workpieces conveying is the functionally simple task nested in more complex task where the conveyor structure cannot be allowed to become too complex. This is because in a typical applications, the conveyor will be repeated many times. The cost of each additional element in terms of money and space is therefore multiplied many times. It is therefore no simple matter to identify those functions that are sufficiently useful to justify their incorporation into the conveyor. It is similarly no simple matter to implement those functions so that their incorporation is not realized at too high a cost.

In short, for nowadays and future PCB assembling with mini-and-micro components, 3-5 micrometers photolithography of the silicon plates for ASIC chips the present design of the conveyors is too expensive and sophisticated.

Therefore, there is a long-felt and unmet need to provide a precise conveyor configured for preventing the conveyance deviations of plate-type-articles in conveyance path.

SUMMARY OF THE INVENTION

It is hence one object of the invention to disclose a transferring-positioning device for conveying the plate-type-article, comprising at least a pair of spaced-apart positioning transporters defining a transferring-positioning path therebetween; each positioning transporter comprises:

(a) an endless-rotating carrier-means determined by the thickness, rotating axis perpendicular to said transferring-positioning path, driven inner side and outer side relative to said rotating axis, top side and bottom side applicable for plate-type workpiece carrying relative to said transferring-positioning path;

(b) a plurality of the rotating positioning-transferring drivers arranged in linear pattern along said transferring-positioning path, wherein each with rotating axis perpendicular to said transferring-positioning path, and comprising axially bottom-up arranged:

(i) a driving means configured for engaging with an inner side of the carrier-means;

(ii) a positioning-transferring roller of the given diameter and rotation surface of respective angle texturing,

therein said rotating positioning-transferring drivers and endless rotating carriers-means belonging to opposite positioning transporters are arranged such that side edges of said plate-type workpiece when placed onto top sides of said carriers-means are in frictional contact therewith and with said rotation surfaces of said positioning-transferring rollers, therein said side edges of said plate-type workpiece, being in said frictional contact with said rotation surface with respective angle texturing, slide to said top sides of said carriers-means, whereby preventing the conveyance deviations of said plate-type workpiece in said transferring-positioning path.

Another object of the invention is to disclose the transferring-positioning device, wherein said endless rotating carrier-means selected from the group consisting of a flat transmission belt, a polygonal cross-section transmission belt, a one-side timing belt, a double-side timing belt, and any combination thereof.

A further object of the invention is to disclose the transferring-positioning device, wherein said endless rotating carrier-means selected from the group consisting of a roller chains and any combination thereof.

A further object of the invention is to disclose transferring-positioning device, wherein pins defining top and bottom sides of said roller chain are pair-wise covered by end-caps for leveling said plate-type workpieces in said transferring-positioning path.

A further object of the invention is to disclose the transferring-positioning device, wherein each of the spaced-apart positioning transporters comprises an endless rotating clamping belt being in friction engagement with rotation surface of respective angle texturing of said positioning-transferring rollers, and axially arranged with said carrier-means, therein said side edges of the conveyed plate-type-workpiece are placeable within a gap between said carrier-means and clamping belt; said endless rotating clamping belt being in said frictional engagement with said rotation surface of respective angle texturing of said positioning-transferring rollers slides to said side-edges of said plate-type workpiece conveyed on said top sides of said carrier-means, whereby preventing the conveyance deviations of said plate-type workpiece in said transferring-positioning path.

BRIEF DESCRIPTION OF THE DRAWINGS

These and other features, aspects, and advantages of the present invention will become better understood with regard to the following description, appended claims and accompanying drawings, where:

FIG. 1a is a perspective view of a precise conveyor conveying a plate-shaped workpiece;

FIG. 1b is a top view of a precise conveyor;

FIG. 2 is a perspective view of a plate-shaped workpiece;

FIG. 3a is a schematic perspective view of a moving endless load carrier;

FIG. 3b illustrates conveying a plate-shaped workpiece by a pair of moving endless load carrier;

FIG. 4a is a side view of a positioning rotating driver;

FIG. 4b is a perspective view of a positioning rotating driver in engagement with a moving endless load carrier embodied as a double-side timing belt;

FIGs 5a, **5b** and **5c** are perspective, top and cross-sectional views of a precise conveyor with double-side timing belts conveying a plate-shaped workpiece, respectively;

FIG. 6 is a perspective view of a moving endless load carrier embodied as a roller chain provided with flattening caps;

FIG. 7a is a side view of a positioning rotating driver arranged for engagement with a roller chain;

FIG. 7b illustrates conveying a plate-shaped workpiece by a roller chain being in engagement with a positioning rotating driver;

FIGs 8a and **8b** are perspective and top views of a precise conveyor with a roller chain driven by sprockets;

FIGs 9a and **9b** are perspective and side views of a precise conveyor provided with an endless clamping belt, respectively;

FIG. 10a is a perspective view of a precise conveyor with timing belts used as moving endless load carrier and endless clamping belt;

FIG. 10b is a perspective view of a precise conveyor provided with tension-toothed rollers; and

FIG. 11 is a perspective view of a precise conveyor with a roller chain and endless clamping belt.

DETAILED DESCRIPTION OF PREFERRED EMBODIMENTS

The following description is provided, so as to enable any person skilled in the art to make use of said invention and sets forth the best modes contemplated by the inventor of carrying out this invention. Various modifications, however, are adapted to remain apparent to those skilled in the art, since the generic principles of the present invention have been defined specifically to provide a precise conveyor.

In the conveying space, it is traditional to designate the conveying direction as an X-axis, the cross-direction orthogonal to the X-axis as a Y-axis. The X- and Y-axes define the conveying plane. The Z-axis is orthogonal to the conveying plane.

Specifically, a workpiece such as a PCB is conveyed along the X-axis. As disclosed further, the side edges of the workpiece are fixed in course of conveying in order to prevent the workpiece from Y-axis play (side-to-side motion) and Z-axis play (up/down jumping).

Reference is now made to Figs 1a and 1b presenting perspective and top views of a precise conveyor 1 comprising a pair of spaced-apart positioning transporters 2 and 2'. As transporters 2 and 2' are symmetrical, further consideration refers to one transporter, but because symmetry is fully applicable to its counterpart. Precise conveyor 1 is configured for conveying plate 3. The present invention is directed to overcoming drawbacks existing in the known state of art such as deviations along any axis (X, Y, Z).

Each positioning transporter 2 comprises an endless rotating carrier-means 20 and a plurality of rotating positioning-transferring drivers 22. The pair of carrier-means 20 belonging to transporters 2 and 2' are synchronized to each other and form a conveyance path along the X-axis lying in the XY plane.

Each positioning-transferring drivers 22 comprises co-axially arranged rotating driving means 220 interfacing with carrier-means 20, and positioning-transferring roller 221 interfacing with plate 3.

Reference is now made to Fig. 2 schematically presenting workpiece 3 (for example, a PCB). According to the Fig. 2, the length of workpiece 3 is disposed along the X-axis and the width along the Y-axis. Then side edges of workpiece to be placed onto carrier-means 20 are designated 30, while workpiece edges 31 which in the course of conveying are in frictional contact with positioning rollers 221.

As shown in Fig. 3a, carrier-means 20 has driven inner and outer sides, and carrying top and bottom sides 201, 202, 203 and 204, respectively. Inner side 201 and rotating driving means 220 are configured cooperatively arranged to be in engagement with each other. According to one embodiment of the present invention, a double-side timing belt is used as carrier-means and the rotating driving means 220 embodied as timing pulley and it is arranged conformably to the internal side of aforesaid timing belt. Alternatively, in the case of a roller chain, rotating driving means 220 are embodied as sprockets.

It should be noted that, contrary to the known conveyors where the rotation axis of the driving means and carrier-means is parallel to the conveyance plane of the conveyor, i.e. the driven and carrying sides utilize the same inner and outer sides of the carrier-means (as in belt as in roller chain); in the present invention the driven sides and carrying sides of the carrier-means are orthogonal, where the plate-type-workpiece 3 is disposed on the carrying top side and supported by the carrying bottom side of carrier-means 20, and the rotation axis of the

positioning-transferring drivers 22 and carrier-means 20 is perpendicular to the conveyance plane XY (Fig. 1a).

According to a preferred embodiment of the present invention, carrier-means 20 is a double-side timing belt, which has high flexibility along its length to shape it in straight slot and high Shore hardness providing inflexibility under the weight of conveyed plate 3.

Reference is now made to Fig. 3b schematically illustrating a conveying procedure. In in terms of it, plate 3 has opposite side portions 30 placeable on top side 203 of carriers-means 20. Plate 3 is conveyed by carriers-means 20 along the X-axis. As shown in Fig. 1a, the position of plate 3 along the Y-axis is defined by mechanical contact of side edges 31 with positioning-transferring rollers 221. Thus, when plate 3 enters between spaced apart positioning transporters 2 and 2' of precise conveyor 1, side portions 30 are mechanically supported by top sides 203 of carriers-means 20 and concurrently with it, side edges 31 of plate 3 are lodged between positioning-transferring rollers 221, there a plate 3 is simultaneously driven via side portions 30 by top side of the carriers-means 20 and via side edges by the rotation surface of the positioning-transferring rollers 221.

A cylindrical rotation surface of positioning-transferring roller 221 carries a directionally oriented textured pattern; when plate-type workpiece 3 is lodged between opposite positioning-transferring rollers 221 with respective angled texturing of the rotation surface enforces the side edge 31 of the conveyed plate 3 being in frictional contact therewith to slide down towards top side 203 of the carrier-means 20 providing null-deviation in Z-axis of the conveyor.

The mentioned angled texturing can be embodied with help of or rough processing said cylindrical surface or low-profile-small-pitch knurling; see, for example, *surface texture and knurling*

- *https://en.wikipedia.org/wiki/Surface_finish;*
- *https://www.researchgate.net/publication/333936932_Optical_measurement_of_ground_cylinder_lead_angle/figures?lo=1;*
- *https://en.wikipedia.org/wiki/Knurling;*

Reference is now made to FIGs 4a and 4b presenting pulley-type rotating positioning-transferring driver 22a. The aforesaid driver comprises timing pulley 220a engageable with the double-side timing belt 20a and positioning-transferring roller 221 having a diameter equal to the pitch diameter of timing pulley 220, keeping the timing belt 20a securely in place together with lower flange 222. Numeral 223 refers to a shaft 223 of positioning-transferring driver 22a.

Reference is now made to FIGs 5a and 5b presenting positioning transporters 2a with double-side timing belt 20a, where top side 203 of timing belt 20a supports side edge portion 30 of conveyed plate-type workpiece 3, while side edge 31 of conveyed plate is in frictional contact with rotating angled texturing surface of each positioning-transferring roller 221a of positioning-transferring drivers 22a.

The toothed rollers 225 provide respective tension for the timing belt 20a. Synchronization of linear speeds of all elements of conveyor prevents disclosed conveyor 1 prevents plate-type workpiece 3 from skewing and jamming conveyor 1.

Reference is now made to FIG. 6 presenting a carrier-means embodied as rolling chain 20b having inner, outer, and top and bottom sides 201b, 202b, 203, and 204b. Pins 207 on top side 203a are covered by pairwise end caps 205 while the pins on bottom side 204b (not shown) by pairwise end caps 206.

Reference is now made to FIGs 7a and 7b, presenting another embodiment of the present invention, namely, positioning-positioning driver 22a per se and in the course of conveying plate-type workpiece 3 on rolling chain 20b having the driven inner and outer sides 201b and, according to the invention the carrying respective top and bottom sides 202b (pin sides). As shown in pairwise end caps 205 on top side 203b of roller chain 20b support plate-type workpiece 3 while the pairwise end caps 206 form conveying linear bearing 23. There designated as 223 is a shaft of the rotating positioning-transferring driver 22b and 224 is a ball bearing fitted therewith for installing and rotating.

Reference is now made to FIG. 8 presenting the above-described roller chain precise conveyor with positioning transporters which are for practical reasons preferable for conveying plate-type workpieces being heavy enough objects requiring accurate processing.

Reference is now made FIG. 9 presenting an alternative embodiment of the present invention. Contrary to the previously described embodiments, positioning-transferring driver 22a is in engagement with two endless rotating belts. Specifically, timing pulley 220a is in engagement with timing belt 20a, but positioning-transferring roller 221a is in engagement with endless rotating clamping belt 41. Similar to the previous embodiments, side portions 30 of plate-type workpiece 3 are supported by timing belt 20a. Edges 31 of plate-type workpiece 3 are lodged between positioning-transferring rollers 221a. Clamping belt 41 (preferably, one-side timing belt arranged with inner side being flat side and outer side being toothed side) also in engagement by its inner flat side with the angled texturing rotating surface of positioning-transferring roller 221a. When clamping belt 41 slide down to plate-type workpiece 3, it

additionally prevents plate-type workpiece 3 from ascending over supporting timing belt 20a. The conveyor provided with clamping belts 41 may be very useful in precise conveying thin and/or flexible plate-type workpieces in the course of the processing procedure.

Reference is now made to Fig. 10a, presenting a side perspective view of the embodiment with clamping belt 41. Top side 203 of timing belt 20a and bottom side 411 of clamping belt 41 form straight slot 42. Plate-type workpiece 3 (not shown) when enters into the precise conveyor is secured by bottom side 411 of clamping belt 41 to top side 203 of timing belt 20a. As described above, clamping belt 41 slides down to plate-type workpiece 3 and presses it to timing belt 20a independently on thickness of plate-type workpiece 3 Referring to Fig. 10b, timing belt 20a clamping belt 41 clamp side portions 30 of plate-type workpiece 3 within conveying-clamping gap 42 and synchronously move in the course of the processing procedure. Timing belt 20a and clamping belt 41 are in engagement with toothed roller 225 being here as inter-belts gear in order to provide equal linear speed of timing belt 20a and clamping belt 41 for accurate conveying and processing the plate-type workpieces.

Reference is now made to Fig. 11, presenting a perspective view of the embodiment with roller chain 20b and clamping belt 41.

Since, in the above embodiment, the plate-type workpiece 3 is resiliently pressed in synchronous motion to roller chain 21 by the clamping rail 41. In other words, plate-type workpieces 3 can be surely and firmly clamped for processing.

The described embodiments with clamping belts provide clamping workpieces of various thicknesses. Since the clamping belt 41 slides in opposite at start and end providing normally opened and a large space for feeding the plate thereto, as well as warped plates can be easily conveyed by the disclosed precise conveyor.

Therefore, in accordance to the invention the opposite carriers-means 20 define the X-position/X-conveyance speed of plate 3 and the conveyance plane XY while the dimensions of the opposite positioning-transferring rollers 221 define the deviations in Y-axis. The deviations along the Z-axis is controlled by the abovementioned respective angled texturing of the rotation surface of positioning-transferring rollers 221 and in the corresponding embodiment by the endless rotating clamping belt.

The embodiments discussed herein are illustrative of the present invention. As these embodiments of the present invention are described with reference to illustrations, various modifications or adaptations of the methods and or specific structures such as straight, curvilinear, spiral and/or dynamically changing conveyance including the materials applied for

the detailed embodiments described may become apparent to those skilled in the art. All such modifications, adaptations, or variations that rely upon the teachings of the present invention, and through which these teachings have advanced the art, are considered to be within the spirit and scope of the present invention. Hence, these descriptions and drawings should not be considered in a limiting sense, as it is understood that the present invention is in no way limited to only the embodiments illustrated.

Claims:

1. A transferring-positioning device for conveying a plate-type workpiece, and comprising at least a pair of spaced-apart positioning transporters defining a transferring-positioning path therebetween; each positioning transporter comprises:

a. an endless rotating carrier,
said carrier determined by the thickness, rotating axis perpendicular to said transferring-positioning path, driven inner side and outer side relative to said rotating axis, top side and bottom side applicable for plate-type workpiece carrying relative to said transferring-positioning path;

b. a plurality of the rotating positioning-transferring drivers arranged in linear pattern along said transferring-positioning path, wherein each with rotating axis perpendicular to said transferring-positioning path, and comprising axially bottom-up arranged:

i. a driving means engaging with said inner side of said endless rotating carrier to drive thereof;

ii. a positioning-transferring roller of the given diameter and rotation surface of respective angle texturing,

therein

said rotating positioning-transferring drivers and endless rotating carriers belonging to opposite positioning transporters are arranged such that side edges of said plate-type workpiece when placed onto top sides of said carriers are in frictional contact therewith and with said rotation surfaces of said positioning-transferring rollers; said side edges of said plate-type workpiece, being in said frictional contact with said rotation surface with respective angle texturing, slide to said top sides of said carriers,

whereby

preventing the conveyance deviations of said plate-type workpiece in said transferring-positioning path.

2. The transferring-positioning device according to claim 1, wherein said endless rotating carrier selected from the group consisting of a flat transmission belt, a polygonal cross-

section transmission belt, a one-side timing belt, a double-side timing belt, and any combination thereof.

3. The transferring-positioning device according to claim 1, wherein said endless rotating carrier selected from the group consisting of a roller chains and any combination thereof.

4. The conveying device according to claim 3, wherein pins defining top and bottom sides of said roller chain, are pair-wise covered by end-caps for leveling said plate-type workpieces in said transferring-positioning path.

5. The transferring-positioning device according to claim 1, wherein each of said spaced-apart positioning transporters comprises an endless rotating clamping belt being in friction engagement with said rotation surface of respective angle texturing of said positioning-transferring rollers, and axially arranged with said carrier,

therein

said side edges of said conveyed plate-type-workpiece are placeable within a gap between said carrier and clamping belt; said endless rotating clamping belt, being in said frictional engagement with said rotation surface of respective angle texturing of said positioning-transferring rollers, slides to said side-edges of said plate-type workpiece conveyed on said top sides of said carrier,

whereby

preventing the conveyance deviations of said plate-type workpiece in said transferring-positioning path.

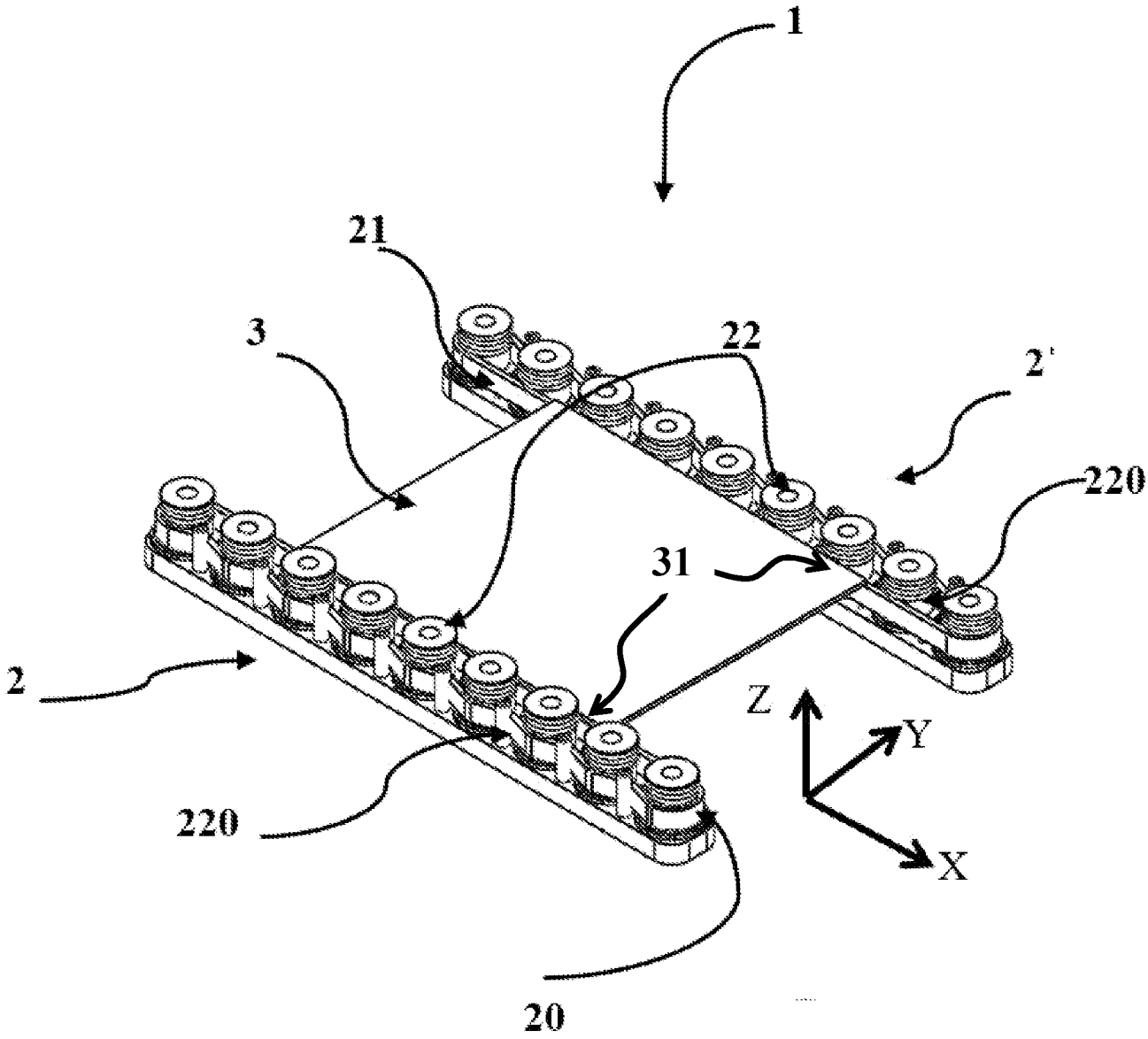

Fig. 1a

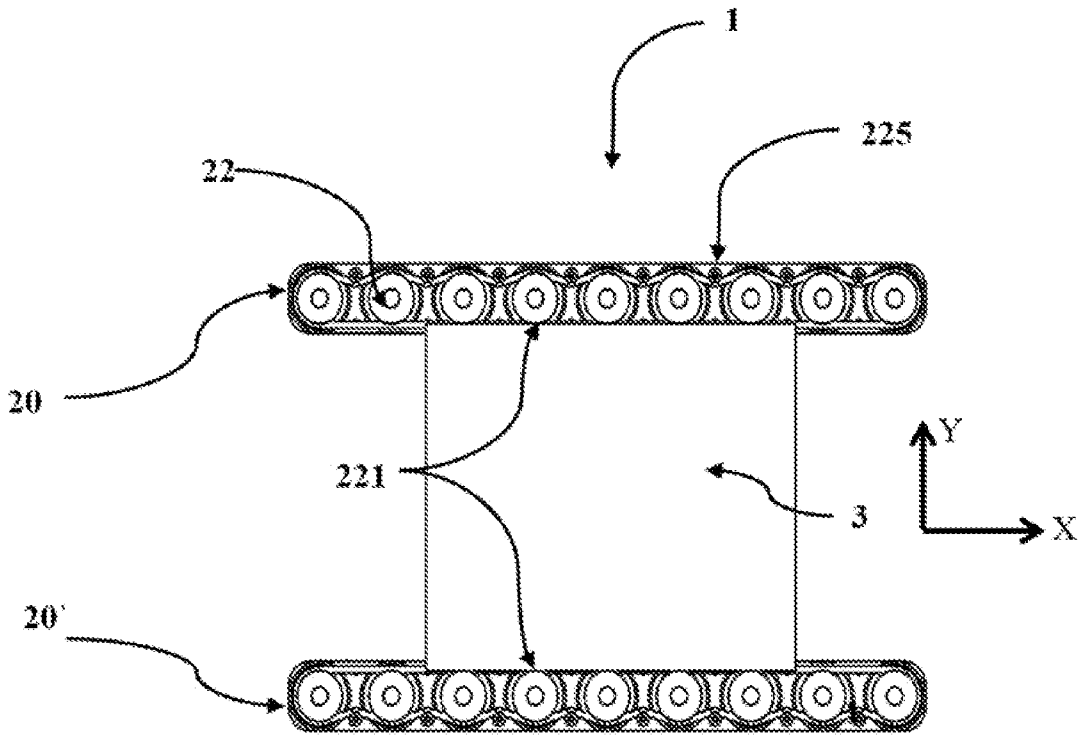

Fig. 1b

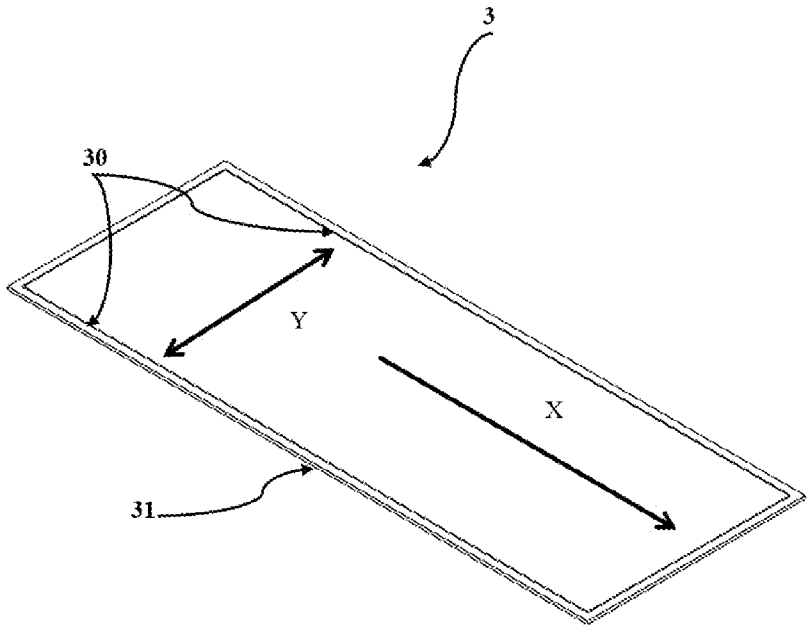

Fig. 2

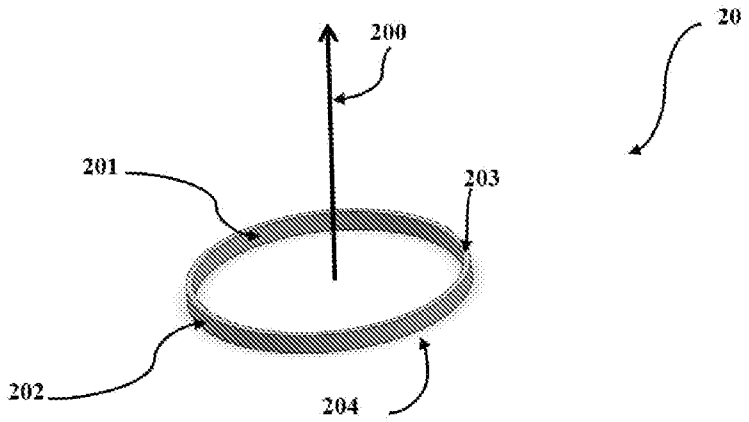

Fig. 3a

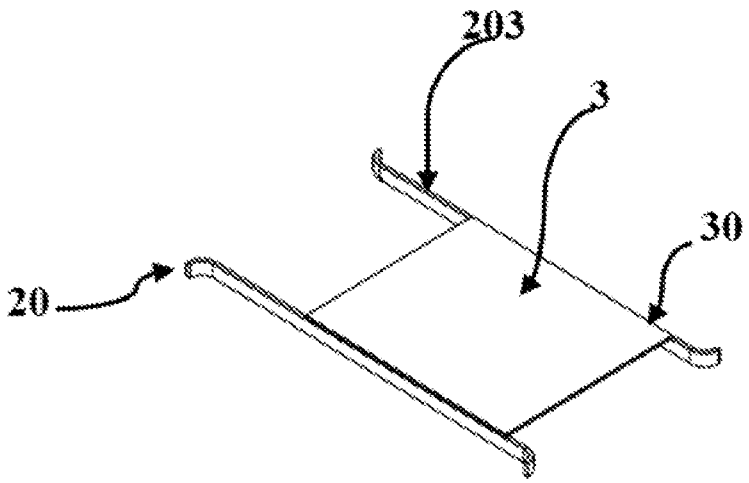

Fig. 3b

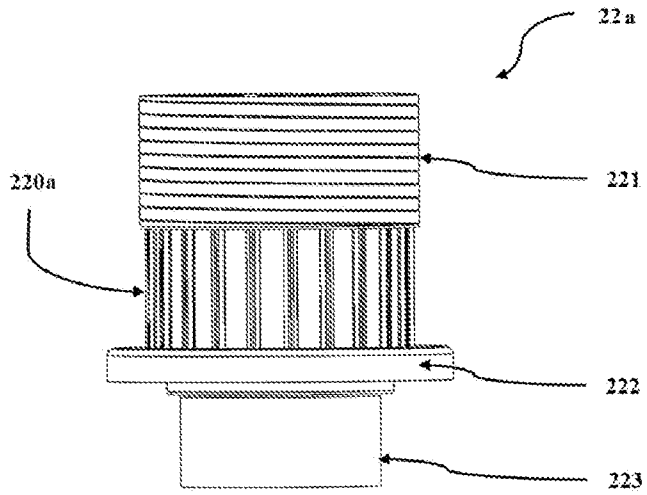

Fig. 4a

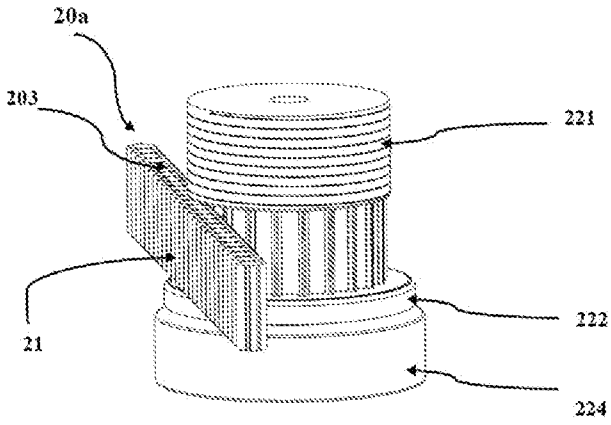

Fig. 4b

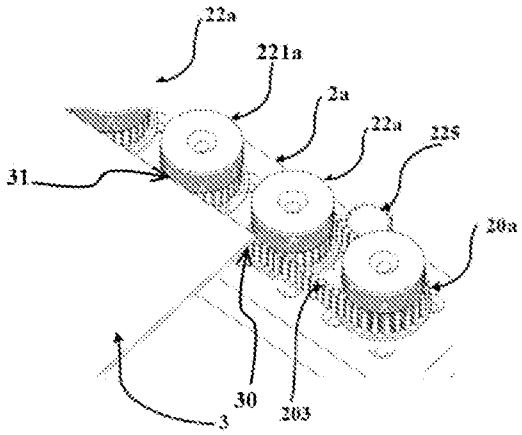

Fig. 5a

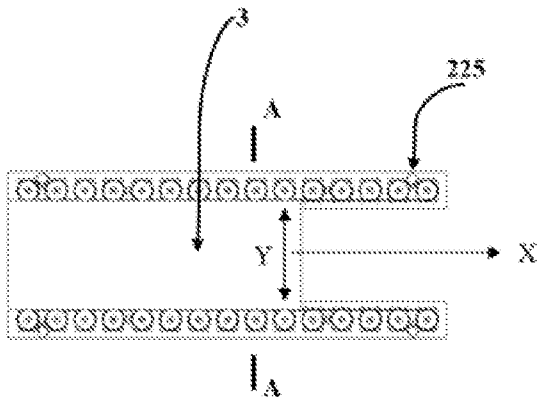

Fig. 5b

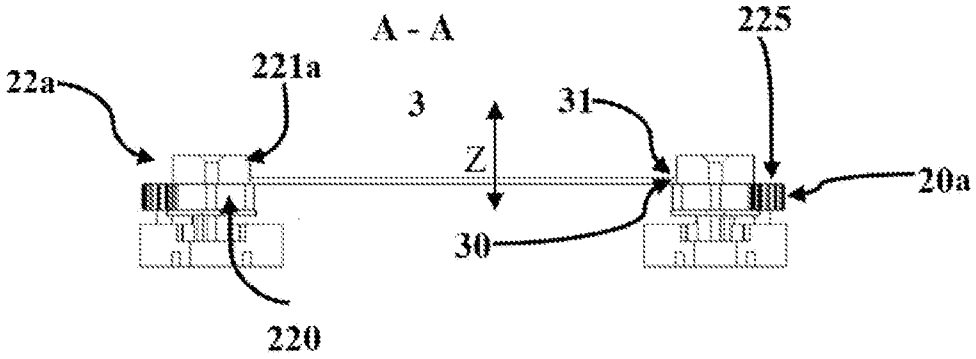
A - A
225
221a
22a
3
31
Z
20a
30
220

Fig. 5c

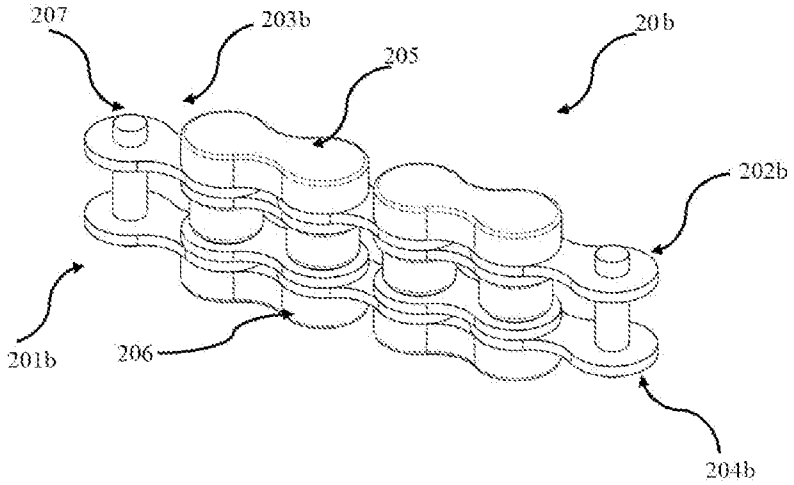
207
203b
205
20b
202b
201b
206
204b

Fig. 6

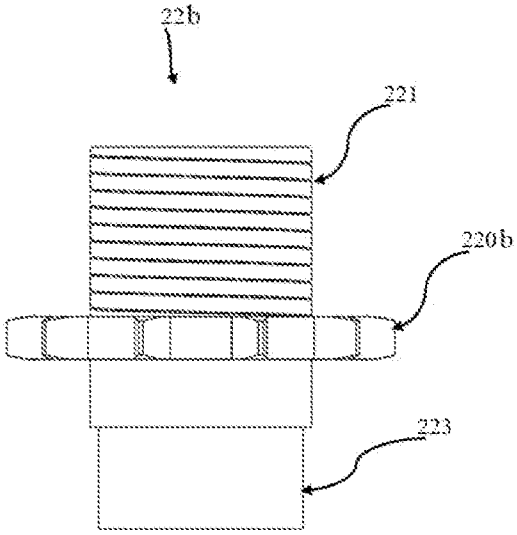

Fig. 7a

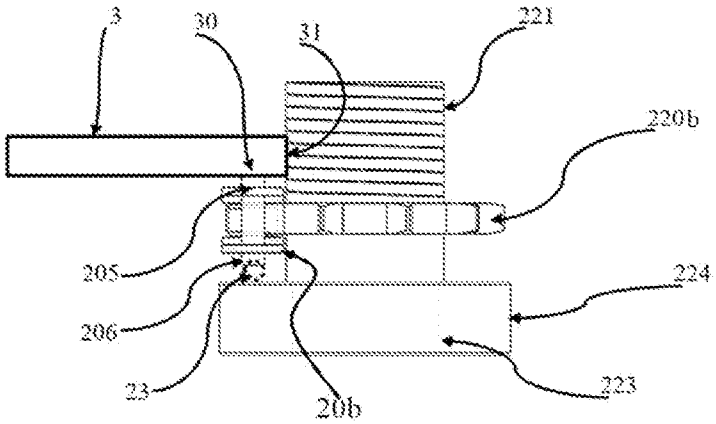

Fig. 7b

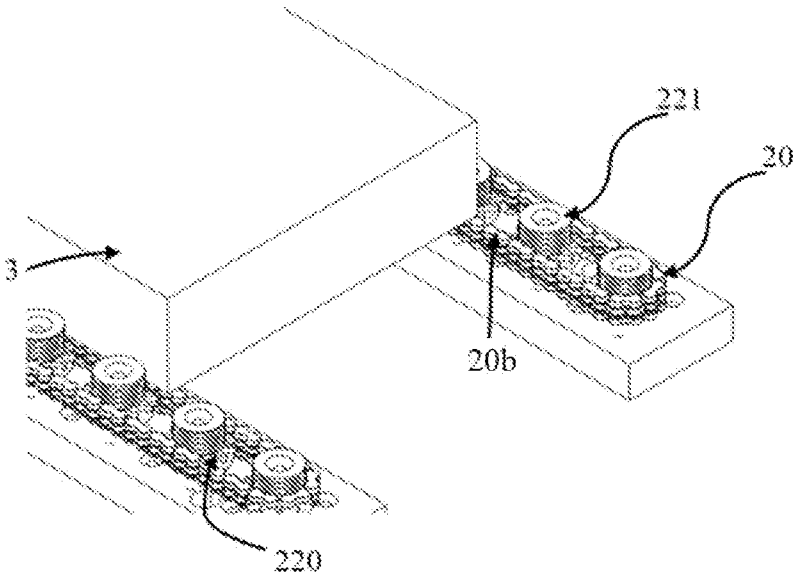

Fig. 8a

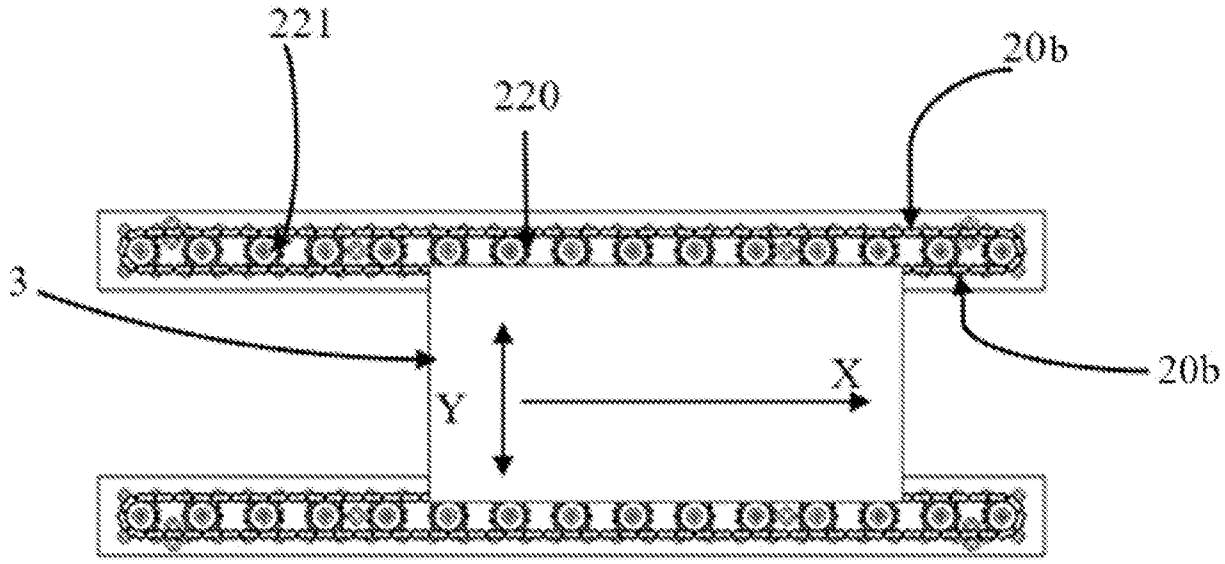

Fig. 8b

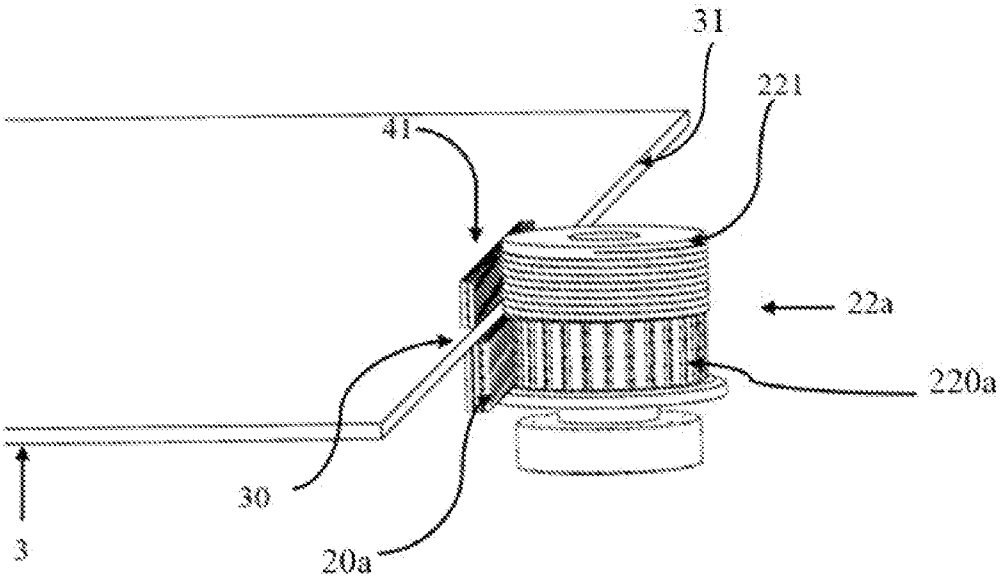

Fig. 9

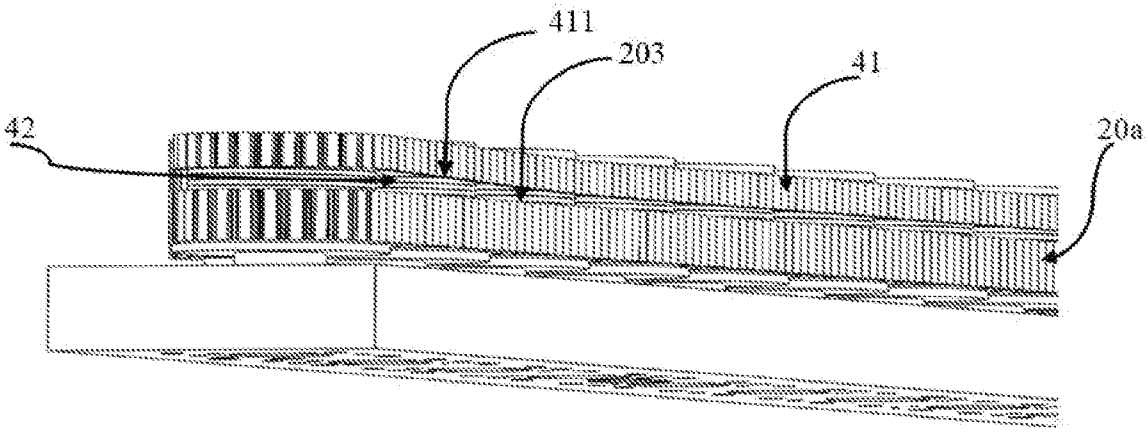

Fig. 10a

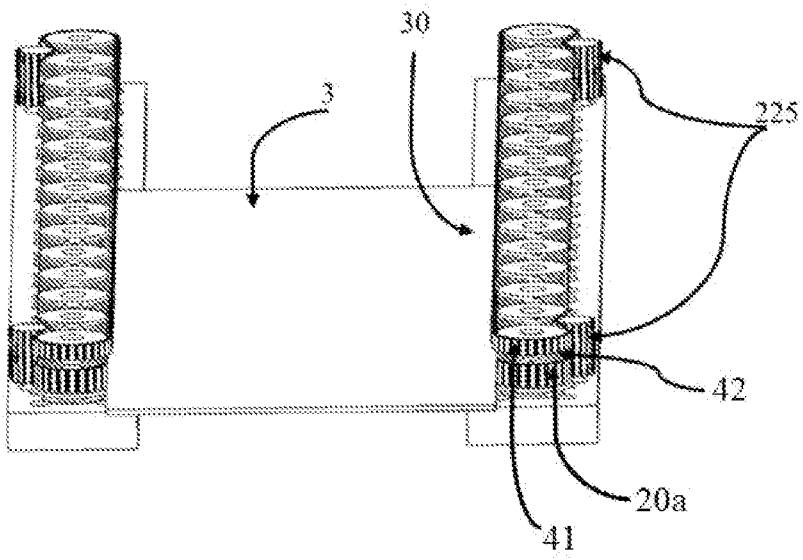

Fig. 10b

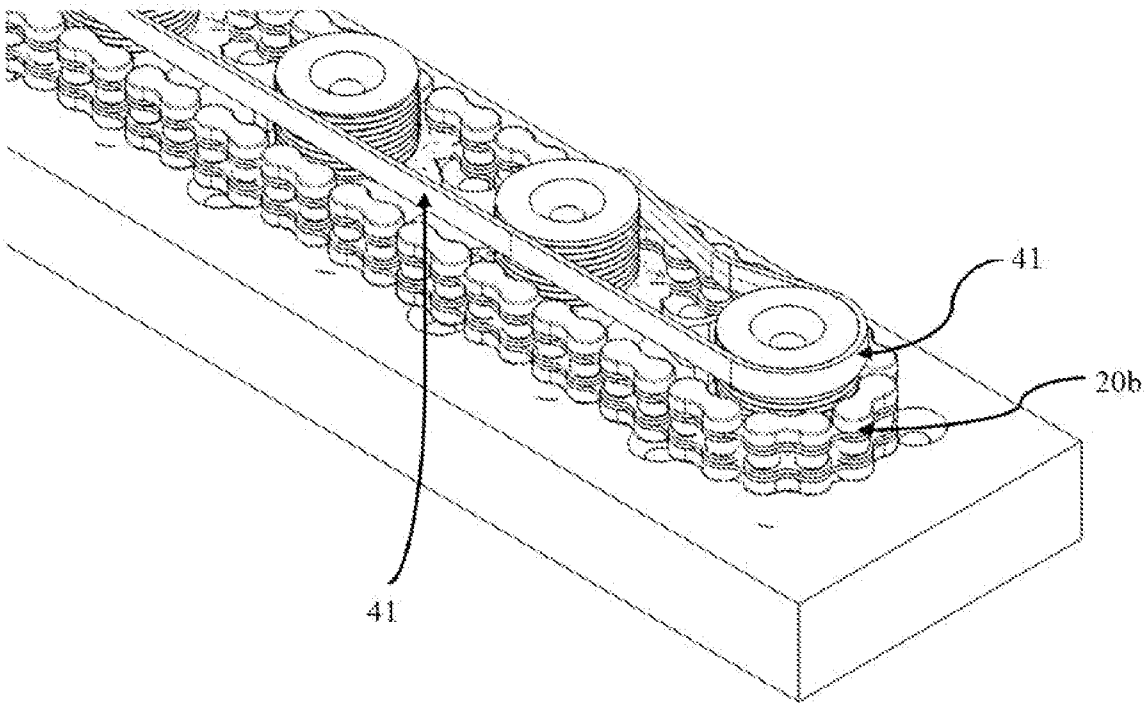

Fig. 11

INTERNATIONAL SEARCH REPORT

International application No.
PCT/IL2024/050610

A. CLASSIFICATION OF SUBJECT MATTER

B65G 15/00(2024.01)i; ***B65G 39/00***(2024.01)i; ***B65G 37/00***(2024.01)i; ***H05K 13/00***(2024.01)i; ***B65G 17/06***(2024.01)i
CPC:B65G 15/00; B65G 39/00; B65G 37/005; H05K 13/0061; B65G 17/06

According to International Patent Classification (IPC) or to both national classification and IPC

B. FIELDS SEARCHED

Minimum documentation searched (classification system followed by classification symbols)

B65G 15/00; B65G 39/00; B65G 37/00; H05K 13/00; B65G 17/06
CPC:B65G 15/00; B65G 39/00; B65G 37/005; H05K 13/0061; B65G 17/06

Documentation searched other than minimum documentation to the extent that such documents are included in the fields searched

Electronic data base consulted during the international search (name of data base and, where practicable, search terms used)

Databases consulted: Esp@cenet, Google Patents, Orbit

C. DOCUMENTS CONSIDERED TO BE RELEVANT

Category*	Citation of document, with indication, where appropriate, of the relevant passages	Relevant to claim No.
A	US 5029696 A (Soltec BV) 09 July 1991 (1991-07-09) Entire Document	1-5

☐ Further documents are listed in the continuation of Box C.

☑ See patent family annex.

* Special categories of cited documents:
"A" document defining the general state of the art which is not considered to be of particular relevance
"D" document cited by the applicant in the international application
"E" earlier application or patent but published on or after the international filing date
"L" document which may throw doubts on priority claim(s) or which is cited to establish the publication date of another citation or other special reason (as specified)
"O" document referring to an oral disclosure, use, exhibition or other means
"P" document published prior to the international filing date but later than the priority date claimed
"T" later document published after the international filing date or priority date and not in conflict with the application but cited to understand the principle or theory underlying the invention
"X" document of particular relevance; the claimed invention cannot be considered novel or cannot be considered to involve an inventive step when the document is taken alone
"Y" document of particular relevance; the claimed invention cannot be considered to involve an inventive step when the document is combined with one or more other such documents, such combination being obvious to a person skilled in the art
"&" document member of the same patent family

Date of the actual completion of the international search	Date of mailing of the international search report
19 August 2024	**20 August 2024**

Name and mailing address of the ISA/IL	Authorized officer
Israel Patent Office **Technology Park, Bldg.5, Malcha, Jerusalem, 9695101, Israel** **Israel** Telephone No. **972-73-3927243** Email: **pctoffice@justice.gov.il**	**SABHAT Avraham** Telephone No.

INTERNATIONAL SEARCH REPORT
Information on patent family members

International application No.
PCT/IL2024/050610

Patent document cited in search report	Publication date (day/month/year)	Patent family member(s)	Publication date (day/month/year)
US 5029696 A	09 July 1991	US 5029696 A	09 July 1991
		DE 69011929 D1	06 October 1994
		DE 69011929 T2	12 January 1995
		EP 0393796 A1	24 October 1990
		EP 0393796 B1	31 August 1994
		NL 8901014 A	16 November 1990