June 30, 1964 W. B. WILKINS 3,139,228

LAMINATED STRUCTURE

Filed May 4, 1962 2 Sheets-Sheet 1

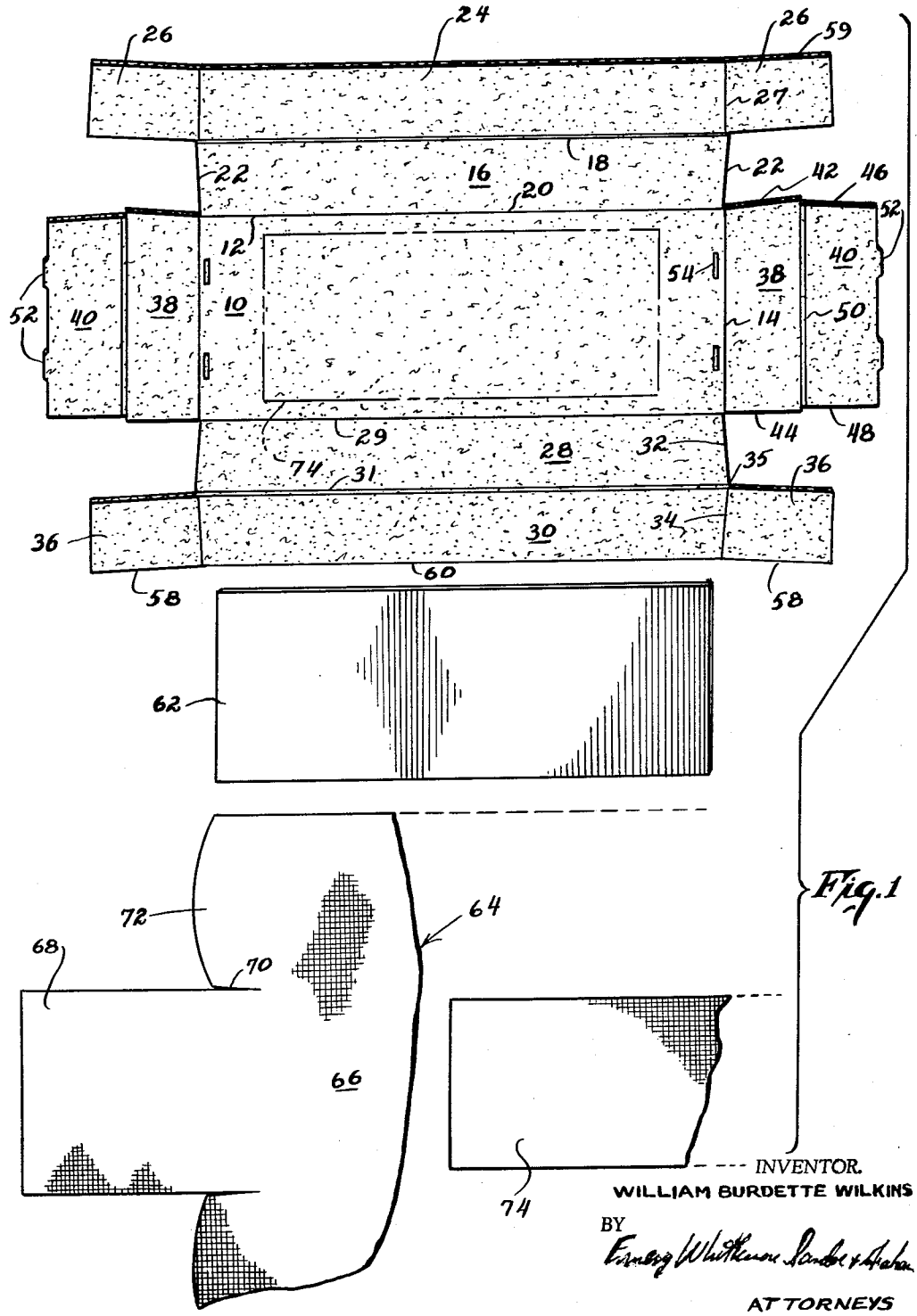

Fig. 1

INVENTOR.
WILLIAM BURDETTE WILKINS

BY

Ernesto Whitemore Sandoe & Graham

ATTORNEYS

June 30, 1964 W. B. WILKINS 3,139,228

LAMINATED STRUCTURE

Filed May 4, 1962 2 Sheets-Sheet 2

Fig. 2

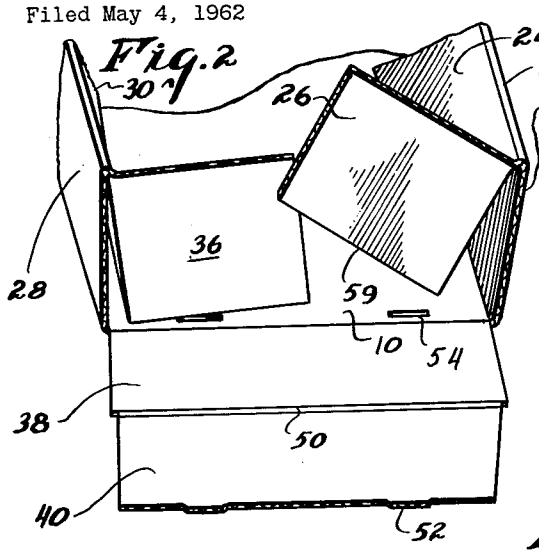

Fig. 3

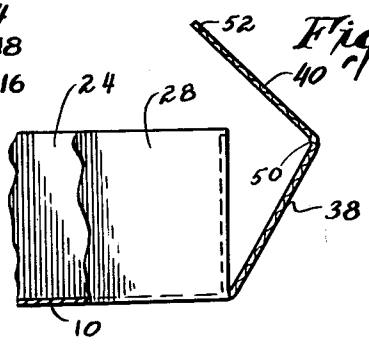

Fig. 5

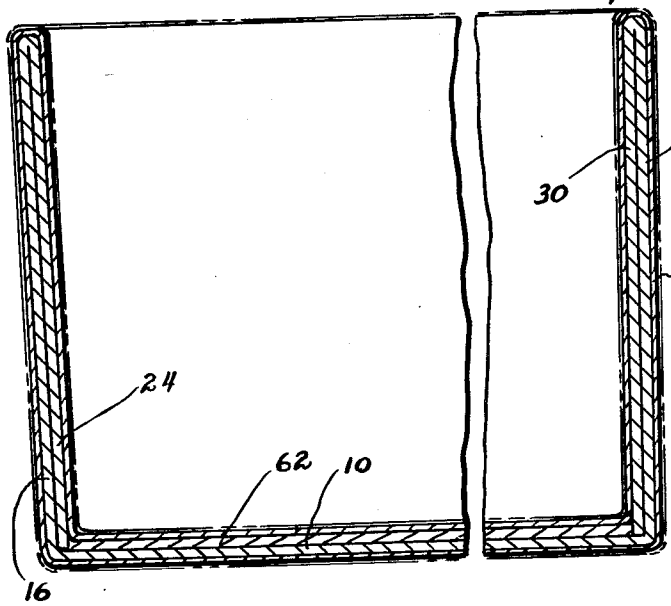

Fig. 6

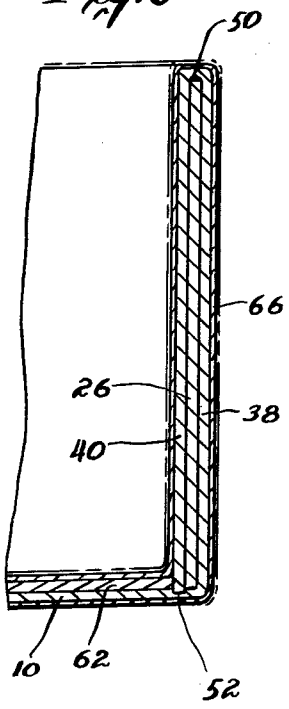

Fig. 4

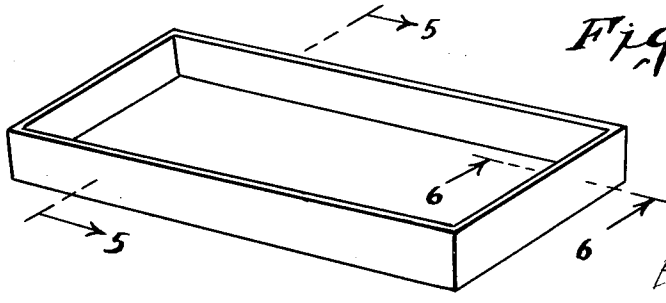

INVENTOR.
WILLIAM BURDETTE WILKINS
BY
Emery, Booth, Newton, Scudder & Allen
ATTORNEYS

United States Patent Office 3,139,228 Patented June 30, 1964

3,139,228

LAMINATED STRUCTURE

William Burdette Wilkins, Roxboro, N.C., assignor to Reinforced Plastic Container Corporation, Roxboro, N.C.

Filed May 4, 1962, Ser. No. 192,510
4 Claims. (Cl. 229—34)

This invention relates to a laminated product and, more particularly, to a laminated product made in the form of a drawer.

Drawers for bureaus, dressers, desks and the like have conventionally been fabricated of wood products such as plywood. However, the material cost, coupled with the relatively high fabrication costs, has caused the art to search for other constructions which will provide the drawer structure at a more economical cost.

Some drawers have been molded directly from glass fiber reinforced plastics. However, the material costs and the molding costs preclude the desired product economy.

It is, therefore, a primary object of this invention to provide an improved drawer structure fabricated from inexpensive corrugated cardboard material which can be fabricated simply and economically.

Briefly, the drawer is constructed by cutting and scoring a corrugated cardboard sheet to predetemrined outline configuration or pattern. The patterned sheet is then folded along score lines to form a self-supporting drawer structure. A rectangular cardboard panel is glued to the bottom to reinforce the bottom and to lock the folded drawer in the erected position. The drawer is thus covered with a cloth on the surface of which is printed a desired pattern. A heat polymerizable resin is then applied and the drawer inserted within a heated mold for curing.

To facilitate insertion of the male die into the drawer, draft must be provided. However, the front of the drawer must be vertical for the end use. For this reason, the sides are angled outwardly at the desired angle of draft and the back wall is angled outwardly at twice the desired angle of draft. The drawer may then be tilted in the mold (the mold configuration being altered to match) to provide equal draft on all walls.

Having briefly described this invention, it will be described in greater detail along with further objects and advantages thereof in the following detailed description, which may best be understood by reference to the accompanying drawings, of which:

FIG. 1 is a plan view showing the component parts cut to the desired dimensions;

FIG. 2 is a perspective view of a portion of the drawer illustrating the process of assembling;

FIG. 3 is an elevation view of the drawer illustrating another step in the method of assembling;

FIG. 4 is a perspective view of the completed drawer;

FIG. 5 is a sectional view along lines 5—5 of FIG. 4; and

FIG. 6 is a cross sectional view taken along lines 6—6 of FIG. 4.

In FIG. 1 of the drawings, there is shown the component parts of the drawer, consisting of an assembly **10** cut and scored from sheet corrugated cardboard, a bottom reinforcement **62** cut from cardboard, and cloths **66** and **74** having a surface pattern to cover the drawer.

The cardboard assembly **10** is die cut from a sheet of corrugated cardboard. The score lines are impressed in the same operation. The cardboard pattern comprises a central rectangular portion **10** defined by the fold lines **12** and **14**, which fold lines are simultaneously scored or pressed into the pattern when it is cut. The rectangular portion **10** defines the dimensions of the bottom of

the resultant drawer. A double thickness back wall is formed from panels **16** and **24** which are folded along scored lines **18** and **20** sequentially. Tabs or flaps **26** extend from panel **24** and are folded along scored line **27**. The edges engage the bottom, thereby to define the erected position of the back wall, as is best seen by simultaneous reference to FIGS. 1–6 and is specifically illustrated in FIG. 2.

The front wall is formed by folding panel **28** and **30** along the scored lines **29** and **31** and folding flaps **36** along the score line **34**.

To simultaneously lock the flaps **26, 36** in position and to define the side walls, end panels **38** and **40** are provided. Panel **38** is folded along line **14** and panel **40** folded along line **50** to enclose the flaps **26, 36** between the panels. The side wall is locked in the erected position by engaging tabs **52** into slots **54** cut in the upper corrugation of the bottom panel **10**. The other side wall is similarly formed and erected.

Since the end walls secure the flaps **26, 36** of front and back walls, the structure is self-supporting and may be easily handled in production. The panel **62** may then be inserted into the drawer and glued to the bottom thereof. The panel **62** is of sufficient thickness to abut the edges of the side and end wall panels, thus locking these panels in the erected position. The panel also reinforces the bottom of the drawer.

As will be described subsequently, the drawer is molded within a die. In order to facilitate the closing of the male die within the drawer, draft must be provided, that is, the walls of the drawer should angle outwardly from the bottom so that the die may be inserted within the drawer with continued frictional engagement with the walls over the entire stroke. However, for appearance, the front wall of the drawer must be vertical with respect to the bottom so that when inserted within a bureau or desk, the drawer front will be flush with the front of the structure.

To meet the concurrent requirements, the side walls are inclined at the desired angle of draft, the back wall is inclined at twice the desired angle of draft, and the front wall is vertical (no draft). When the drawer is placed in the mold, the bottom is tilted so that the apparent draft of front and rear walls are equal. The die configuration must be suitably modified. This practice is, however, conventional and not illustrated or described in detail.

To support the side walls at the desired inclination, the edges **22, 32** are cut on an angle of the desired inclination, for example, at a 1° angle. Similarly, scoring lines **27, 34** are angled to conform to edge **22, 32** when folded. The score lines are displaced inwardly to compensate for the thickness of the folded material. In order, however, to erect the front wall vertically with respect to the bottom plane, the edge **58** of flap **36** must be angled with respect to the fold line **34** so that when panels **28, 30** are folded and erected, the edge **58** will engage the bottom **10** when the wall is perpendicular to the bottom. Similarly, the edge **44** of the side wall is cut at right angles to the wall line **14** so that when erected it will present a vertical surface. To provide a neat corner, the fold line **34** is indented by cut **35**. Similarly, the edge **48** is indented so that it may be inserted within the container.

The back of the drawer is inclined at twice the required draft with respect to the plane of the bottom **10**. Thus, the flap **26** is angled with respect to fold line **27** at a larger angle than that of flap **36** with respect to line **34**. Thus, when panels **16, 24** are erected, the edge **59** meets the bottom when the back wall is erected to the desired orientation (e.g. having a 2° draft.)

To provide the necessary mating at the corner with the back wall, the side panels are correspondingly shaped and the sides 42 and 46 are cut at a 2° angle outwardly with respect to the bottom surface.

To positively lock the walls in position, the top surface of the corrugated sheet stock is scored along parallel lines and the surface therebetween indented to form receptacles 54 to receive tabs 52. A rectangular sheet 62 of thick cardboard is cut out to match the bottom. Insertion of the cardboard, thus, locks the wall panels in position as can be seen from FIGS. 5 and 6. Simultaneously, the panel reinforces and strengthens the drawer bottom. I have found it preferable to bond the reinforcement to the bottom by a suitable adhesive so that the drawer is maintained in an erected position during fabrication. The adhesive must be compatible with subsequent processing.

Cloth 64 having a central portion 66, end flaps 68 defined by cutouts 70 and side flaps 72 is then applied to the drawer by placing the central portion 66 within the bottom of the drawer folding flaps 72 over the front and back walls of the drawer, covering the end walls with the flaps 72 and flaps 68 applied thereover. The exposed bottom is covered by a rectangular cloth section 74.

The cloth is secured to the drawer by resin which may be applied by soaking the cloth therein or by application as the cloth is applied, whichever is most convenient to the processing facilities available.

The resin used is a heat polymerizable or setting resin or a heat curable plastisol, having the necessary transparency to expose the pattern or the cloth. For example, polyester resins, epoxy type resins, phenol formaldehyde resins, urea formaldehyde resins may be used. The impregnation of the cloth must be sufficient to completely bond the cloth to the drawer. However, the resin does not impregnate and corrugated material. It only penetrates into the surface layer.

The entire drawer is then inserted within a forming mold for curing of the resin. When the drawer is inserted within the mold, it is angled slightly so that equal draft will be provided at the front and back walls of the drawer. This technique is conventional and will not be explained in detail.

For the purposes of this invention, the plastic webbed fibrous material may be patterned in any desired finish pattern and may be constructed of cotton, rayon, nylon, sisal, or the like which are sufficiently heat resistant to withstand molding temperatures of the order of 225 to 250° C. The resin is utilized to bond the coating to the corrugated material to form a continuous surface thereof. However, no material penetration of the resin into the corrugated stock material is needed or desired. That is, the resin bonds the fabric to the outer surface of the corrugated material. The resin is not, however, applied in such quantities as to penetrate through the corrugated material.

Thus, a drawer is provided from low cost stock which is easily assembled and handled. The molding of the drawer and curing of the resin provides a smooth, strong structure. The cloth pattern is exposed, thus, enabling variation in pattern to suit the application intended.

This invention may be variously modified and embodied within the scope of the subjoined claims.

What is claimed is:

1. A drawer comprising a pattern cut from corrugated sheet stock, said pattern having a rectangular bottom portion, a first and second back wall panel extending from one longer side of said bottom portion and contiguous along an intermediate scored fold line, back wall end flaps extending from each end of the outer panel, said panel being erected by folding said panels along the fold line therebetween and along the fold line scored at the junction of said panel with said bottom portion, the erected position of said back wall being defined by said flaps which are folded inwardly to contact the bottom portion, a first and second front wall panel extending from the other longer side of said bottom portion and being continuous along an intermediate scored fold line, front wall end flaps extending from each end of the outer panel, said panel being erected by folding said panels along the fold line therebetween and along the fold line scored at the junction of said panel with said bottom portion, the erected position of said front wall being defined by said flaps which are folded inwardly to contact the bottom portion, a first and second side wall panel extending from each shorter side of said bottom portion and contiguous along an intermediate scored fold line, end tabs extending from each outer edge of the outer panel, receptacle scored on the surface of said bottom portion, said side walls being erected by folding said panels along the fold lines (to enclose said front and back wall flaps therebetween) and inserting said tabs into said receptacles to lock the pattern in the erected position, the erected position of said front wall being perpendicular to said bottom portion, the erected position of said side walls being at the desired draft angle for molding, the erected position of said back wall being at twice the desired draft angle.

2. A drawer in accordance with claim 1 which includes a rectangular cardboard insert which is inserted into the erected pattern and bonded to the bottom portion thereof to reinforce the bottom and to lock the walls in the erected position.

3. A drawer in accordance with claim 1 which includes a cloth covering therefor, said cloth being impregnated with heat curable resin, said resin being cured by molding of the drawer in a heated mold.

4. A drawer in accordance with claim 3 in which said resin impregnated only the cloth and the surface layer of said pattern.

References Cited in the file of this patent

UNITED STATES PATENTS

203,670	Stevens	May 14, 1878
772,750	Smith	Oct. 18, 1904
1,167,409	Joslin	Jan. 11, 1916
1,270,642	Martin	June 25, 1918
1,997,523	Katz	Apr. 9, 1935
2,042,210	Clay	May 26, 1936
2,136,184	Fellowes	Nov. 8, 1938
2,420,522	Daly	May 13, 1947
2,468,951	Barter	May 3, 1949