Nov. 8, 1966 J. T. BICKHAUS ETAL 3,284,063

CARBURETOR

Filed July 29, 1963

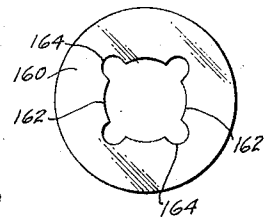

FIG. 3.

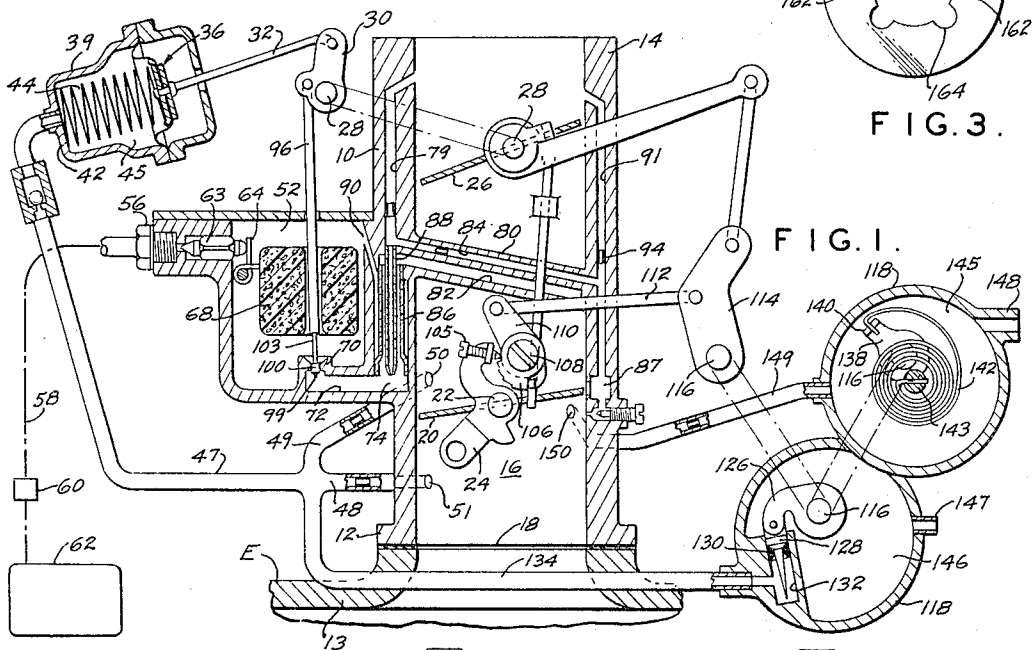

FIG. 1.

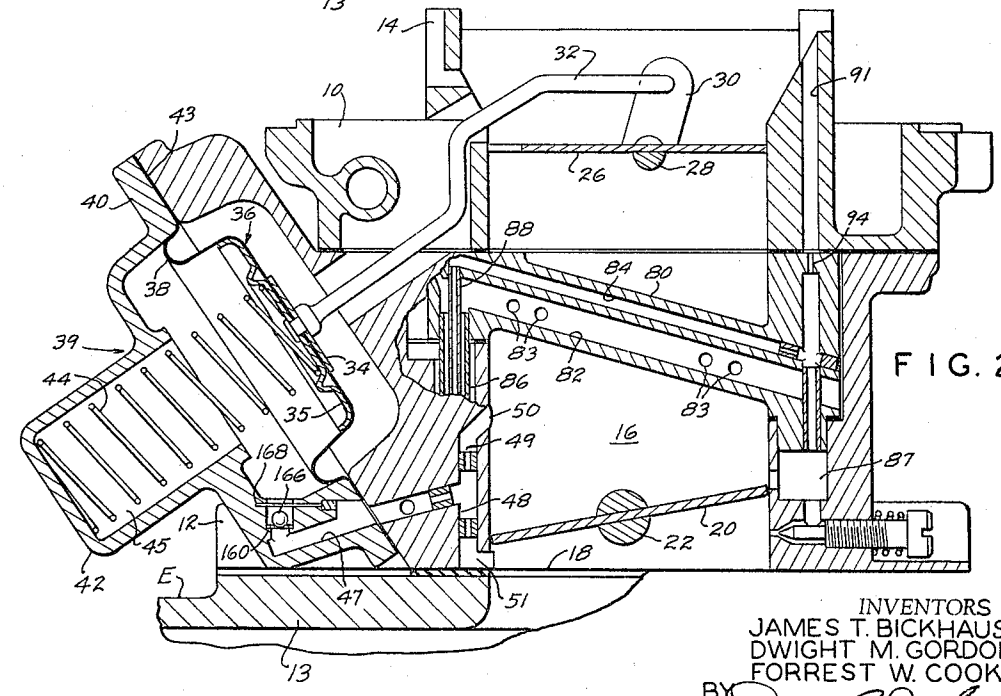

FIG. 2.

INVENTORS
JAMES T. BICKHAUS
DWIGHT M. GORDON
FORREST W. COOK

BY

AGENT

United States Patent Office

3,284,063

Patented Nov. 8, 1966

3,284,063

CARBURETOR

James T. Bickhaus, Granite City, Ill., Dwight M. Gordon, Farmington, Mich., and Forrest W. Cook, Webster Groves, Mo., assignors to ACF Industries, Incorporated, New York, N.Y., a corporation of New Jersey

Filed July 29, 1963, Ser. No. 298,263
5 Claims. (Cl. 261—50)

This invention is directed to an air valve carburetor of the type having an air and fuel mixture conduit through the carburetor body. Within the mixture conduit is mounted a manually operated throttle valve for movement between an open and closed position. Upstream from the throttle valve within the mixture conduit is mounted an air valve structure, which in the device of this invention measures the flow of air through the carburetor to meter the fuel flowing to the engine.

In an air valve carburetor of this type, the air valve is biased into a closed position. During engine operation, the differential of air pressure on opposite sides of the air valve is used to open the air valve against the closing bias. Also, flow of air into the mixture conduit may exert a dynamic air pressure on the air valve if it has an unbalanced construction. This tends to open the air valve against the closing bias. The closing bias is normally applied by a spring connected to the air valve. The opening force, resulting from the air pressure differential on the opposite sides of the air valve, is applied by the unbalanced construction of the air valve and by the use of an air motor connected to the air valve and responsive to subatmospheric air pressures in the mixture conduit downstream of the air valve. A carburetor of this type is shown and described in the co-pending application of Cook et al., Serial No. 276,472, filed April 29, 1963, of which this invention may be considered a modification.

In carburetors of the type mentioned above and described in the above cited co-pending application of Cook et al. the air valve has a double function in controlling the amount of fuel drawn into the mixture conduit of the carburetor. One, the air valve retains a partial vacuum downstream, which is varied in accordance with the degree of opening of the air valve. This partial vacuum is utilized to draw fuel from the main nozzle of the carburetor. Two, the degree of opening of the air valve greatly affects the flow of fuel to the main nozzle, since the fuel metering structure is directly tied to the air valve and functions to change the flow of fuel to the mixture conduit in accordance with the degree of opening of the air valve.

The air valve, as a measure of the air flow through the carburetor, is a sensitive device and is designed to act quickly to changes in flow of air through the carburetor. Thus, movement of the throttle lever manually to increase or decrease air flow to the engine results in a quick followup of the air valve to a position determined by the amount of the air flow through the carburetor. Also, change in engine speed due to changes in load will change the flow of air going to the engine through the carburetor and will result in a rapid change in the position of the air valve. Because of the tendency of the air valve to react quickly to changes in air flow through the mixture conduit, the air valve will swing past the position it should assume and then tends to hunt the correct position by fluttering back and forth over the position, which it should take. This hunting action of the air valve is undesirable. Since fuel flow is determined by the partial vacuum downstream of the air valve resulting from the position of the air valve as well as the position of the metering rod in the jet, an oscillating or hunting action of the air valve tends to cause an irregular flow of fuel detrimental to

proper operation of the engine. A more extreme problem exists, however, when upon rapid acceleration of the engine by a sudden opening of the throttle, the air valve will quickly sense the resulting increase in air flow and will swing widely to an open position past the position it should take. This lowers the partial vacuum downstream of the air valve and insufficient fuel will be drawn to mix with the increased air flow for providing the proper mixture for rapid acceleration.

It is thus an object of this invention to provide an air valve carburetor of the type described in which novel means are provided to prevent an undue leaning of the air-fuel mixture upon rapid acceleration of the engine.

It is a further object of this invention to provide a novel air valve carburetor of the type described which will not swing or oscillate past a position to which it is quickly moved by the sudden increase in air flow through the carburetor.

It is another object of this invention to provide a novel air valve carburetor in which the tendency of the air valve to hunt its correct position is reduced or eliminated.

It is a further object of this invention to provide a novel air valve carburetor of the type described in which an appropriately enriched mixture is provided upon quick acceleration of the engine.

The invention is one which eliminates the tendency of an air valve in a carburetor from oscillating or hunting the proper position upon a sudden increase in air flow through the carburetor and also which eliminates the tendency of the air valve to lean out the air fuel mixture during rapid acceleration of the engine. The invention is in the use of means to provide a lag in the operation of the air valve so that the air valve will follow the opening of the throttle less closely and will not respond as quickly to a sudden increase in air flow to the carburetor. The invention specifically is in the use of a valve structure which permits a greater flow of air to the air motor operating the air valve than flow of air from the air motor. The valve structure provides a novel means for limiting the air flow from the air motor but does not hinder the flow of air to the air motor as the air valve moves in a closing direction. This action of the valve structure dampens the response of the air motor to an increase in air flow to the carburetor.

FIGURE 1 is a schematic representation of a carburetor in accordance with the invention.

FIGURE 2 is a partial sectional view of a carburetor utilizing the invention and of the type disclosed in FIGURE 1.

FIGURE 3 is a valve seat member in accordance with the invention.

The carburetor shown in the figures has a body portion **10**, which is connected at a flanged end **12** to an intake manifold structure **13** of engine E. The other end of the carburetor body is formed with an air horn section **14**, to which an air filter may be mounted and through which air passes into the carburetor. Passing through the carburetor body **10** from the air horn **14** is a mixture conduit **16** opening at one end into the intake manifold **13** at **18** and through which air from the air filter passes to the engine. Mounted in the manifold end of the mixture conduit **16** is a throttle valve **20**, fixed to a throttle shaft **22** journaled for rotational movement in appropriate bearing surfaces in the carburetor body **10**. Fixed to one end of the throttle shaft **22** is a manually operable lever **24** for moving the throttle **20** from a closed to an open position. In the closed position the throttle **20** is across the mixture passage **16**, as indicated in FIGURE 2, to prevent the flow of air therethrough. The throttle may be moved from this closed position to the wide open position of FIGURE 1.

Mounted upstream of the throttle and across the air horn section **14** of the carburetor is an air valve **26**. As indicated in FIGURE 1, valve **26** closes the air horn passage and extends across the mixture passage **16**. When in this closed position, the air valve prevents flow of air through the mixture passage **16**. Air valve **26** is fixed eccentrically to a shaft **28** journalled in the carburetor body for rotational movement. Shaft **28** extends through the carburetor subsantially parallel to the throttle shaft **22**.

A short lever arm **30** is fixed to and extends from the air valve shaft **28**. Lever arm **30** is loosely connected to one end of an actuating rod **32**, the other end of which is fixed to a backing plate **34** of a diaphragm assembly **36** of a servo motor **39**. The diaphragm assembly consists of a flexible diaphragm **38** of rubber or appropriate material, which has its center fixed between the pair of plates **34** and **35**. The attached end of operating rod **32** may be spun over to lock the plates tightly together with the diaphragm **38** in-between. The peripheral edge of diaphragm **38** is sandwiched between the flanged rim surface **40** of a spring housing **42** and a matching rim surface **43** of the body **10**. Rim surfaces **40** and **41** are tightly fastened together by any appropriate means as by machine screws, for example, extending through the housing flange surface **40** into the adjacent portion of the carburetor body **10**. A spring **44** is mounted within the housing **42** with one end abutting the closed end of the housing and its other end in contact with the center of plate **35** of the diaphragm assembly. Spring **44** biases the diaphragm assembly **30** in a direction to close the air valve **26**.

The interior of housing **42** forms a chamber **45** with diaphragm **38** and is sealed except for an air passage **47** connecting into a first branch passage **48** opening into the intake manifold opening **18** through a port **51**. Another second branch **49** of passage **47** extends through a port **50** into the mixture conduit **16** between the closed position of throttle valve **20** and the air valve **26**.

Formed within the body **10** of the carburetor is fuel bowl **52** adjacent to the mixing conduit **16**. A fuel inlet fitting **56** extends through the fuel bowl wall to provide fuel access to the bowl **52**. The fuel fitting **56** is connected in any appropriate manner to an inlet fuel line **58** leading from a fuel pump **60** which sucks fuel from a fuel tank **62**. The fuel inlet line **58**, fuel pump **60** and fuel tank **62** are only schematically shown in FIGURE 1.

Fuel fitting **56** connects with a short passage having a valve seat which is controlled by a needle valve **63** operated from a float lever **64** pivoted within the fuel bowl and having a free end attached to a float **68**. The float controlled inlet needle **63** operates in a well-known manner. As the fuel in bowl **54** reaches a predetermined level, the float will force the pointed end of needle **63** into the valve seat to prevent additional flow of fuel into the bowl.

In the bottom of each fuel bowl there is a fuel jet **70** having a calibrated passage therethrough connected to a fuel passage **72** leading to a fuel well **74** formed in the carburetor body in the wall of mixing conduit **16**.

Extending across mixture conduit **16** is a tubular across member **80** formed with a main fuel passage **82** and an idle fuel passage **84**. An apertured fuel tube **86** extends downwardly into the well **74**. The upper end of tube **86** is opened and connects with the fuel passage **82**. Coaxially mounted within the fuel tube **86** is an idle fuel tube **88**, with its upper open end connecting with the fuel passage **84**. Fuel tube **88** is closed except for a small restriction at its lower end suspended within the fuel well **74**. An air passage **90** of predetermined size forms an air bleed passage from the fuel bowl **52** leading into the upper portion of well **74** to provide air flow into the main fuel passages. Passage **79** extends from the air horn **14** to the idle fuel passage **84** to provide a controlled air bleed through restriction **81** to the idle system. Another air passage **91** extends from the upper end of the air horn **14** and connects the idle fuel passage **84** to an idle chamber **87**, which is connected through idle parts **92** and **93** to the mixture conduit **16**. A restriction **94** in passage **91** controls the amount of air bled into the idle system through passage **91**.

Within the fuel bowl **52** there is mounted a fuel metering rod **96** which is connected at its upper end to an arm of lever **30** fixed to the air valve shaft **28**. The other end of metering rod **96** is shaped with variations in rod thickness, consisting of an intermediate portion **100** of optimum thickness and a minimum thickness portion **103**. The connection of metering rod **96** to the air valve shaft **98** provides simultaneous operation of the metering rod with the air valve so that fuel flow through the carburetor may be proportional to the air flow as measured by air valve **26**.

An arm of the throttle lever **24** carries a screw **105** for contacting a fast idle cam **106** freely pivoted on a screw shaft **108** and in an eccentric manner so that gravity will bias the cam **106** in a counterclockwise direction. A second lever **110** is also freely mounted for rotation on screw shaft **108** and is connected by a link **112** to a control lever **114** fixed to a shaft **116** journaled for free rotation in a cup housing **118**.

A third lever **138** is fixed at the other end of the shaft **116** for rotation therewith. Lever **138** is bifurcated at its free end **140** to receive one end of a bimetallic thermostatic spring **142** fitted into the bifurcation **140** so as to move the lever **138** to rotate shaft **116**. The other end of spring **142** is fixed to a stationary shaft **143** extending from the cup housing **118**.

Fixed to an intermediate portion of shaft **116** for rotation therewith is a second lever **126** carrying at its free end a tapered metering valve **128**. The upper end of valve **128** is pivotally mounted on the free end of lever **126** so as to pivot relative thereto. The tapered end of the metering valve **128** extends into a restriction **130** having a passage therethrough of predetermined size which leads into an air chamber **132** in the housing **118**. Air chamber **132** is connected by an air passage **134** to the air passage **47**.

The cup housing **118** is divided into a pair of chambers **145** and **146** by an imperforate wall structure **144** extending transversely across the housing. This wall **144** prevents the interference of air flow through one chamber with the air flow conditions of the other chamber. Chamber **146** is connected to the atmosphere through a vent **147**. Chamber **145** is connected to a source of heated air such as a stove connected to the exhaust manifold of the engine. Warm air from the stove is brought through an inlet fitting **148** into the chamber **145**. Chamber **145** is connected by an air passage **149** to the carburetor flange **12** at a point **150** downstream of the throttle **20**. Because of subatmospheric air pressure conditions in the manifold **18** during the engine operation, air will flow from the manifold stove through the hot air conduit and fitting **148** into the chamber **145** and from the chamber through passage **149** into the manifold. Also, atmospheric air will flow through vent **147** into chamber **145** and when the valve **128** is open from chamber **145** through passage **134** into passage **47**.

In operation, the engine is cranked to operate the fuel pump and to force fuel into the inlet fitting **56** of the carburetor. With the float valve in a lowered position, fuel will flow into the fuel bowl until the float **68** is raised to a pre-determined position at which point the needle valve **62** is closed to prevent further flow of fuel into the fuel bowl. Fuel will flow from the fuel bowl by gravity through the metering jet **70** into fuel passage **72** and to a level in the fuel well **74** equal to the level of fuel in the fuel bowl.

When the engine is cold thermostatic spring **142** rotates shaft **116** clockwise as viewed in FIGURE 1 to place the high point of cam **106** in the path of throttle screw **105** to hold the throttle open for fast idle opera-

tion. Valve 128 is moved out of slot 130 to permit air to bleed into passage 47 whereby air valve 26 is closed slightly to provide an enriched mixture for cold operation. When heated by warm air flowing through chamber 145, coil 142 rotates counterclockwise and closes valve 130 to provide a leaner mixture for the engine and places a lower portion of cam 106 in the path of idle screw 105 for curb idle operation.

One side of diaphragm 36 of the air motor is exposed to the air pressure within chamber 45, which is connected to port 50 in mixture conduit 16 between air valve 26 and throttle valve 20. The other side of diaphragm 36 from which rod 32 extends is exposed substantially to atmospheric pressure which is that of air in the air horn 14 upstream of air valve 26.

Starting

During cranking of the engine with the throttle open, the engine turns over to pump air through the carburetor. With the engine cold, spring 44 of the servo motor holds air valve 26 closed. Servo motor spring 44 also biases the metering rod 96 through lever 98 to its uppermost position, so that the small diameter starting portion 99 of the metering rod is respectively positioned within the metering jet 70 to enable a sufficient amount of fuel to flow into the fuel nozzle bar 80. Sufficient air to start the engine passes through an aperture in the air valve 26 and into the mixture passage 16. Fuel to start engine is drawn out of the fuel well 75 and the nozzle bar passages 82 and 84 by sub-atmospheric pressure at the nozzle bar 80. The fuel passes into the mixture conduits through the main nozzle ports 83 and the idle ports 92 and 93.

Engine operation

When the engine is running and the throttle is opened from its closed position, the air pressure at port 50 drops from atmospheric and the air pressure in motor chamber 45 is reduced until diaphragm 36 is pressed inwardly against the bias of spring 44. The air valve 26 then takes a position determined by servo motor 39, in which the difference in air force on the opposite sides of diaphragm 36 balances the bias of spring 44. As throttle 20 is moved to change the amount of air flowing to the engine, the servo motor 39 will change the position of air valve 26 to retain substantially the same pressure drop across the air valve. The air valve 26 is thus a device for measuring air flow through the carburetor to the engine.

The value of spring 44 is pre-selected to retain a fixed pressure drop across the air valve at all times. This spring determines the proper relationship between the amount of air flowing through the carburetor and the angular position of the air valve, which positions the proper portions of metering rod within jet 70. The shaped metering portions of rod 96 are calibrated to give sufficient fuel flow through jets 70 to provide maximum power at any speed of the engine at wide open throttle up to the full air capacity of the carburetor. The optimum air-fuel ratio is maintained with a full open air valve by the increased depression around the nozzle bars 80 due to increased manifold vacuum at higher speeds.

Thus, as described above, the air valve 26 of the carburetor is used to provide a sub-atmospheric pressure at all times in the region of the nozzle bar 80 so that fuel can be pulled from the main fuel system through the main fuel jets 83 to mix with the air flow through the carburetor. Also the air valve is utilized to appropriately position the metering rod 96 within the jet 70 so as to control the flow of fuel to the mixture conduit 16 during engine operation.

The air valve and servo-motor assemblies in a carburetor of the type described is sensitive in operation and the air valve 26 is moved very quickly in response to changes in air flow through the mixture conduit. It has been found that there are certain disadvantages which accrue from an air valve which responds so readily and very rapidly to changes in air flow. It has been found that, when the air flow through the carburetor is rapidly increased, the air valve 26 reacts quickly to swing open toward its appropriate position. However, the inertia of the assembly carries the air valve past this position and opens the air valve too much. This results in excessive pressure in the servo-motor chamber 43, which will swing the air valve back through its proper position again. Thus, the air valve, under conditions of a sudden increase of air flow through the carburetor, tends to oscillate about the position its should assume, and thus to hunt the correct position. Such a condition occurs during rapid acceleration, when the throttle 20 is manually opened from a part open position to a wide open position. The sudden rush of air through the carburetor causes the air valve to swing open and to move past its proper position for wide open throttle. This lowers the vacuum condition in the region of the main fuel nozzles 83 so that less fuel is drawn from the fuel circuit than is required for rapid acceleration. This leaning out of the mixture during the acceleration operation causes the engine to stumble before it gains its acceleration speed. Furthermore the hunting action of the air valve causes the vacuum condition downstream of the air valve to fluctuate, which results in poor engine operation during acceleration.

Another condition of engine operation, in which the described fluttering operation of the air valve occurs, is when there is a sudden change in the load of the engine with a fixed throttle position. If for any reason the load causes the engine to speed up, such as a downshifting in the transmission of the car, the sudden increase in air flow to the mixture conduit will cause the air valve 26 to swing beyond its proper position and thus again lean out the mixture.

Therefore, in accordance with the invention and to eliminate the tendency of the air valve to hunt its proper position upon a sudden increase of air flow through the carburetor, a valve structure is positioned in the air passage 47 leading from servo-motor chamber 45 to the mixture conduit. The valve structure consists of a seat which may be formed by a small metallic disc or washer 160, as shown in FIGURE 3, which is press-fitted into passage 47 as indicated in FIGURE 2. Washer or disc 160 has a central aperture bounded by peripheral portions 162 formed on a common circle. Scalloped corners or equally spaced portions 164 are formed between the peripheral circular portions 162. A small ball valve 166 is positioned on the seat 160 and is gravity biased into the aperture at the center of the disc 160. The ball closes the central portion of the aperture defined by the circular peripheral portions 162, retaining, however, the scalloped portions 164 open for the passage of air from the servo-motor chamber 45 into the mixture conduit 16 under conditions of sub-atmospheric pressures at the ports 50 and 51. A wire retainer 108 is positioned above the ball valve 166 so as to prevent the passage of the ball into the chamber 45, if the carburetor is turned upside down.

The operation of the ball check valve in passage 47 is such that under the conditions described above in which upon rapid acceleration of the engine when the throttle 20 is suddenly moved to a wide open position, manifold vacuum operates downstream of the air valve 26 to cause a flow of air out of the servo-motor chamber 45 through port 50. This flow of air is restricted due to the seating of the ball 66 on the circular peripheral portions 162. The scalloped apertured portions 164 of the valve seat permit only a limited flow of air through. Thus, the response of the servo-motor to an increase in vacuum conditions at port 50 is delayed, and the air valve opens at a much slower rate. The retarding then, of the air flow through passage 47 dampens the movement of the air valve 26 and also prevents it from

oscillating around its new position upon sudden increase of air flow through the carburetor.

In a similar manner, any change in the load on the engine, such as a sudden decrease in the load, will cause the pressure downstream of the air valve **26** to drop due to a sudden increase in engine speed before the air valve moves. This causes the servo-motor **39** to operate quickly to position the air valve, as a measure of the increased air flow. However, the flow of air out of the servo-motor chamber **45** past the ball valve **166** is restricted so that the movement of the air valve is retarded and it moves more slowly than it would otherwise, into the new position it takes as a measure of the increased flow of air.

The delay in the opening of the air valve under the demands of the engine in the manner described above, prevents a rapid drop in the vacuum conditions around the nozzle apertures **83** and retains for a longer period of time the higher vacuum conditions. This results in a larger amount of fuel flowing out of the nozzle apertures **83** than would flow if the air valve opening were not dampened. This is a distinct advantage during rapid acceleration when a richer mixture is desired in the increased power demands of the engine. Thus, by eliminating the tendency to lean out the fuel mixture by an over-opening of the air valve, there is now no tendency of the engine to stumble or falter and thus to produce a bump effect during rapid acceleration or in down-shifting of the transmission from a higher to a lower gear ratio, for example.

The type of valve structure described and shown in FIGURES 2 and 3 is not limiting as it is quite obvious that other valves having by-pass bleed structures would also function in a similar manner. The use, thus, of a valve that will retard the flow of air to the servo-motor passage **47** in one direction but not in the other still retains the high sensitivity of the air valve and servo-motor combination, which is required so that the air valve may rapidly follow the movement of the throttle **20** and yet, at the same time, removes the disadvantage provided by the over-travel of the air valve under the conditions described above.

We claim:

1. A carburetor comprising a body structure having an air and fuel mixture conduit therethrough, a throttle valve mounted across said mixture conduit for movement from an open position to a position closing said mixture conduit, means for operating said throttle valve, an air valve mounted within said mixture conduit anteriorly of said throttle valve for movement from an open to a position closing said mixture conduit, means for supplying fuel to said mixture conduit, a servo motor means connected to said air valve to move said air valve between said open and closed positions thereof, means forming an air passage from said mixture conduit to said servo motor to move said air valve in response to air pressure downstream of said air valve, and valve means in said air passage for restricting the flow of air from said servo motor to said mixture conduit, said valve means being constructed to permit relatively free flow from said mixture conduit to said servo motor, said valve means comprising a valve member and a seat having at least one opening therethrough operative to pass air when said valve member is seated.

2. The invention of claim **1** wherein said servo motor includes a chamber and a movable member having one surface exposed to the atmosphere and an opposite surface enclosed within said chamber, said air passage being connected to said chamber to control the position of said air valve in accordance with the drop in pressure of air flowing through said mixture conduit across said air valve.

3. A carburetor comprising a body structure having an air and fuel mixture conduit therethrough, a throttle valve mounted across said mixture conduit for movement from an open to a position closing said mixture conduit, lever means for operating said throttle valve, an air valve mounted within said mixture conduit anteriorly of said throttle valve for movement from an open to a position closing said mixture conduit, said carburetor body including a fuel reservoir and a fuel passage extending from said fuel reservoir to said mixture conduit between said air valve and said throttle valve, a metering rod having a portion of varying thickness positioned in said fuel passage for varying fuel flow therethrough, means connecting said metering rod to said air valve for simultaneous movement therewith, an air motor connected to said air valve and metering rod to move said air valve and metering rod simultaneously, means forming an air passage from said mixture conduit to said air motor to control said air valve and metering rod in response to air pressure drop across said air valve and said throttle valve, and automatic unitary valve means in said air passage having provision for relatively free flow of air to said air motor from said mixture conduit when in a first operative position and for limiting the flow of air from said air motor to said mixture conduit when in a second operative position.

4. The invention of claim **3** wherein said air motor includes a chamber and a movable member having one surface exposed within said chamber, said air passage being connected to said chamber to control the position of said air valve in accordance with the drop in pressure of air flowing through said mixture conduit across said air valve.

5. The invention of claim **3**, wherein said valve means includes a valve seat and a valve member biased onto said valve seat, said valve seat having openings therethrough for a limited flow of air when said valve member is on said valve seat.

References Cited by the Examiner

UNITED STATES PATENTS

2,969,783	1/1961	Braun.	
2,988,345	6/1961	Kolbe et al.	261—50
2,996,051	8/1961	Mick	261—69 X
3,053,240	9/1962	Mick	261—69 X
3,190,284	6/1965	Koepf	137—513.5 X
3,190,623	6/1965	Ball	261—39

FOREIGN PATENTS

515,040	10/1939	Great Britain.

HARRY B. THORNTON, *Primary Examiner.*

T. R. MILES, *Assistant Examiner.*