P. T. & J. L. COFFIELD.

SANITARY DRINKING CUP.

APPLICATION FILED FEB. 11, 1914.

Patented July 28, 1914.

1,105,547.

2 SHEETS—SHEET 1.

Fig. 1.

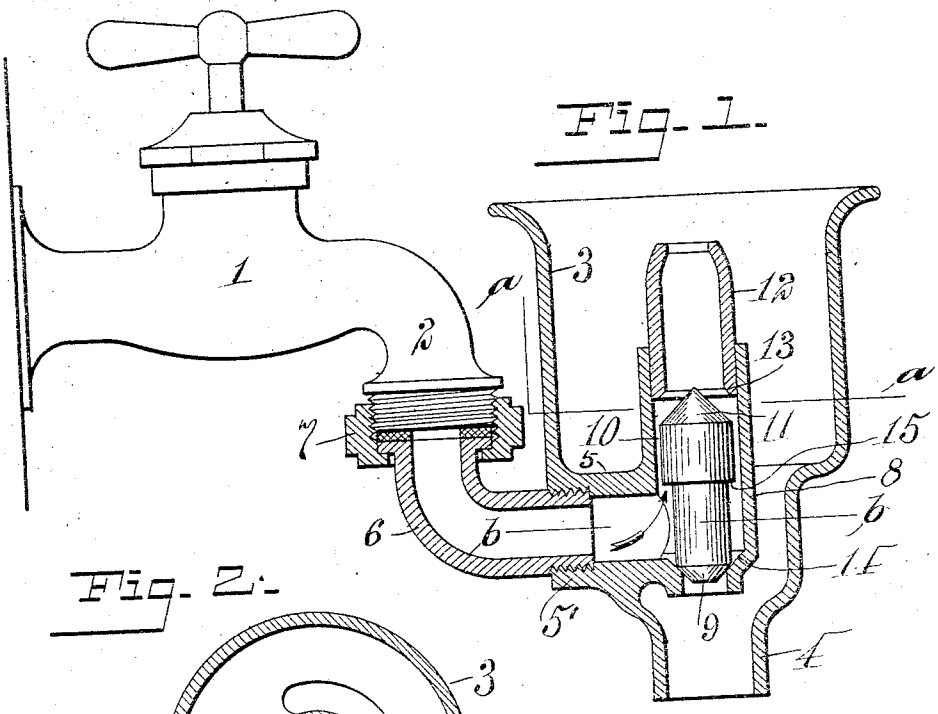

Fig. 2.

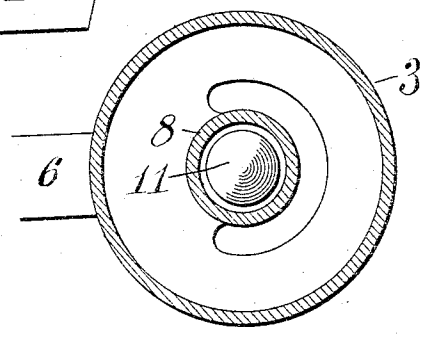

Fig. 3.

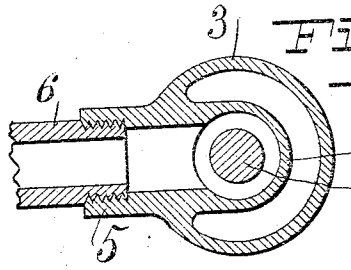

Fig. 4.

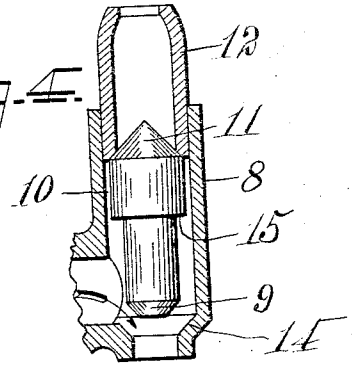

Witnesses:
M. Leibler
Mellie Galloway

Inventors:
Peter T. Coffield
and
James L. Coffield
By R. J. McCarter
their Attorney

P. T. & J. L. COFFIELD.

SANITARY DRINKING CUP.

APPLICATION FILED FEB. 11, 1914.

Patented July 28, 1914.

1,105,547.

2 SHEETS—SHEET 2.

Fig. 5.

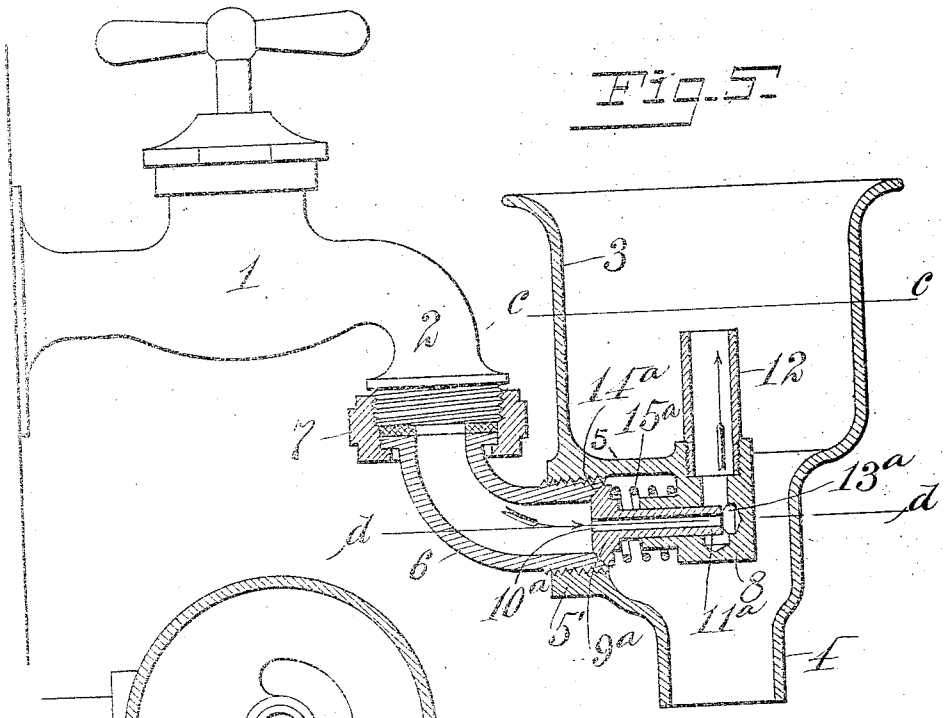

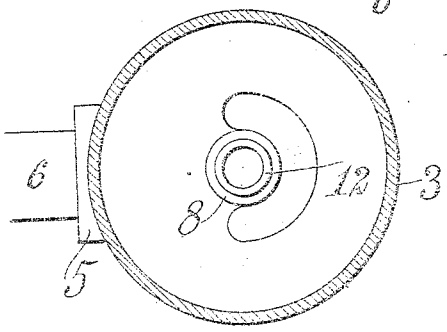

Fig. 6.

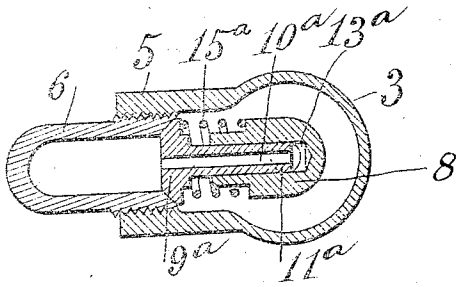

Fig. 7.

Fig. 8.

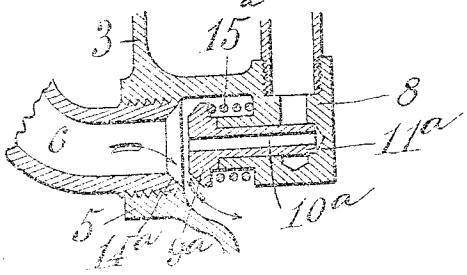

Witnesses:

M. Sickler

Mellie Galloway

Inventors

Peter T. Coffield

James L. Coffield.

By P. J. McGarity

their Attorney

UNITED STATES PATENT OFFICE.

PETER T. COFFIELD AND JAMES L. COFFIELD, OF DAYTON, OHIO, ASSIGNORS TO THE COFFIELD MOTOR WASHER COMPANY, OF DAYTON, OHIO, A CORPORATION OF OHIO.

SANITARY DRINKING-CUP.

1,105,547. Specification of Letters Patent. Patented July 28, 1914.

Application filed February 11, 1914. Serial No. 818,141.

To all whom it may concern:

Be it known that we, PETER T. COFFIELD and JAMES L. COFFIELD, citizens of the United States, residing at Dayton, in the county of Montgomery and State of Ohio, have invented certain new and useful Improvements in Sanitary Drinking-Cups; and we do declare the following to be a full, clear, and exact description of the invention, such as will enable other skilled in the art to which it appertains to make and use the same, reference being had to the accompanying drawings, and to the letters and figures of reference marked thereon, which form a part of this specification.

Our invention relates to new and useful improvements in sanitary drinking fountains.

The object of the invention is to provide a drinking fountain which is attachable to any water faucet supplied from the city mains and which does not require to be detached from the faucet when it is desired to draw water in large quantities or for other uses. In other words the device becomes a permanent fixture without interfering with the quick drawing of water for any and all purposes.

To this end our invention comprises a valve which furnishes water for drinking purposes at certain pressures, but which may assume a position in which the water will be diverted from the drinking fountain for other uses, as will hereinafter more fully appear from the following description in connection with the accompanying drawings.

Referring in general terms to said drawings, Figure 1 is a sectional elevation of our improved sanitary drinking fountain attached to a water faucet: Fig. 2 is a sectional view on the line *a*—*a* of Fig. 1; Fig. 3 is a sectional view on the line *b*—*b* of Fig. 1; Fig. 4 is a sectional elevation showing the valve closing the passage to the drinking tube; Fig. 5 is a view similar to Fig. 1 showing a modified form; Fig. 6 is a section on the line *c*—*c* of Fig. 5; Fig. 7 is a section on the line *d*—*d* of Fig. 5; and Fig. 8 is a sectional elevation showing the valve of Fig. 5 closing the passage to the drinking tube.

In the specification and drawings, similar reference characters indicate corresponding parts.

Referring more particularly to the drawings, 1 represents an ordinary water faucet having a screw-threaded bib 2 to which our improved drinking fountain is attached. The integral parts of the fountain consist of a cup 3 from which projects a lower discharge spout 4 and an internal apertured boss 5 which extends inwardly from an internal screw-threaded opening 5′. Within the cup 3 is a drinking tube or jet 12 supported in the upper end of a casing 8 which is integral with or extends from the boss 5 on the inside of the cup. The screw-threaded opening leading to said boss receives one end of an elbow 6 the other end of which is attached to the bib 2 by means of a coupling 7 and thus is obtained the connection between the faucet and drinking fountain hereinbefore referred to. The casing 8, as shown in Fig. 1, is provided with a lower discharge opening 14 which forms a valve seat for a discharge valve 9 normally maintained on said seat by the weight of said valve. The said valve 9 is integral with an upper valve 11 which is adapted to engage a seat 13 to close the opening in the drinking tube or jet 12. The upper valve 11 is somewhat smaller than the bore of the casing 8 to provide a passageway 10 for the water to flow around said valve to the tube 12. The body or intervening part of the valves 9 and 11 is of two diameters, thereby forming an annular shoulder 15 on the valve body. When the water is turned off at the faucet, the valve member rests in the position shown in Fig. 1 and closes the lower opening 14. When the water is turned on slightly or the force of which does not exceed the weight of the valve member, said water passes to the jet or drinking tube 12 through the annular passageway 10. When, however, the water is turned on to a greater extent or the force of which exceeds the weight of said valve member, the pressure of the water acting on the annular shoulder 15 will elevate the valve body thereby shutting off the supply to the jet 12 and allowing the water to pass out of the lower spout 4. It will, therefore, be seen that when the water is desired for drinking purposes the faucet 1 need only be turned slightly and the water allowed sufficient force to rise above the tube 12, but when the water is wanted in larger quantities or for other purposes it may be discharged into a receptacle through the spout 4 by opening the faucet to a greater extent. It will also be noted that the

water cannot pass through the jet 12 when under excessive pressure thereby maintaining a uniform jet for drinking purposes and preventing a waste of water and inconvenience to the person drinking.

In Figs. 5 to 8, inclusive, we have illustrated a modification in the form and arrangement of the valve. The valve-body is placed in a horizontal position and the portion 9^a is exposed directly to the action of the water and is adapted to engage a seat 14^a formed on the inner end of the connecting elbow 6. The inner end of the valve-body forms a valve 11^a in conjunction with a seat 13^a formed in the casing 8 in line therewith. The body of said valve has a longitudinal opening 10^a therethrough which establishes a communication between the elbow 6 and the drinking tube 12 when the force of the water is not sufficient to shift said valve from the position shown in Fig. 5 to that shown in Fig. 8. A spring 15^a normally holds the valve 9^a on its seat until the force of the water exceeds the tension of the spring.

Having described our invention, we claim.

1. In a device of the character specified, a casing having a main water inlet and upper and lower discharge openings, and a valve member mounted therein actuated by the water pressure and adapted to control the passage of water through one or the other of said discharge openings according to the force exerted thereon by the water.

2. A drinking fountain adapted to be permanently attached to a water faucet and comprising a shell having an internal boss provided with horizontal and vertical openings communicating one with the other, a drinking tube communicating with the vertical opening, and a fluid actuated valve controlling the water passage to said drinking tube and to the lower opening, said valve normally closing the lower opening and establishing a communication with the drinking tube.

3. In a device of the character specified, a casing having a main water inlet and outlet and a jet for drinking purposes, and a fluid actuated duplex valve member adapted to normally close the main outlet and maintain a communication with the drinking jet, the position of said valve member depending upon the force of the incoming water.

4. In a device of the character specified, a casing having a main water inlet and outlet and a jet for drinking purposes, and a valve member adapted to normally close the main outlet and to maintain a communication between the main inlet and said drinking jet, said valve member having an annular shoulder against which the water impinges to reverse said valve member when the force of the water exceeds the weight of said valve member.

5. In a device of the character specified, a casing having a main water inlet and outlet and a drinking jet, a valve member having an enlarged portion lying within the entrance to the drinking jet and providing an annular passage therearound and an annular shoulder therebelow, said valve member being adapted to normally close the main outlet and maintain a communication between the drinking jet and the inlet and to be reversed when the force of the water exceeds the weight of said valve member.

6. The combination with a valve casing having a low pressure discharge opening and a high pressure discharge opening, of a duplex valve normally closing the high pressure opening and adapted to close the low pressure discharge opening when actuated by the fluid pressure.

In testimony whereof we affix our signatures, in presence of two witnesses.

PETER T. COFFIELD.
JAMES L. COFFIELD.

Witnesses:
R. J. McCarty,
Matthew Siebler.