Jan. 7, 1936. G. M. JENSWOLD ET AL 2,026,898

TOY PISTOL

Filed July 15, 1933

Fig. 1.

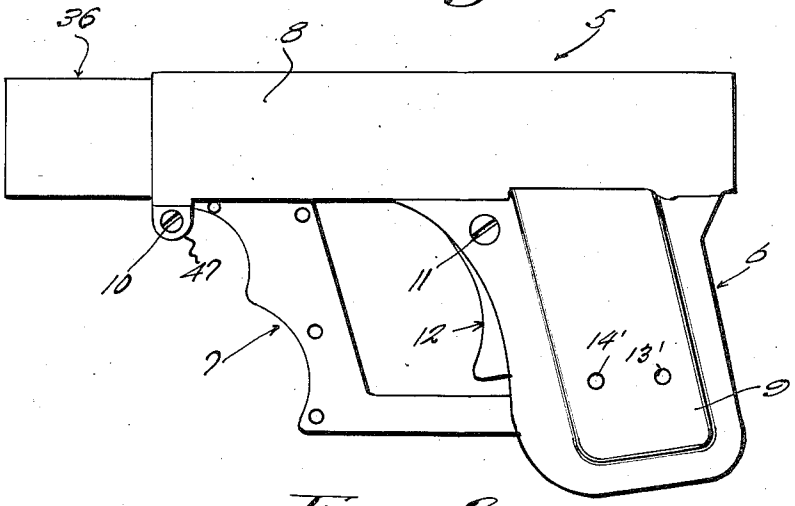

Fig. 2.

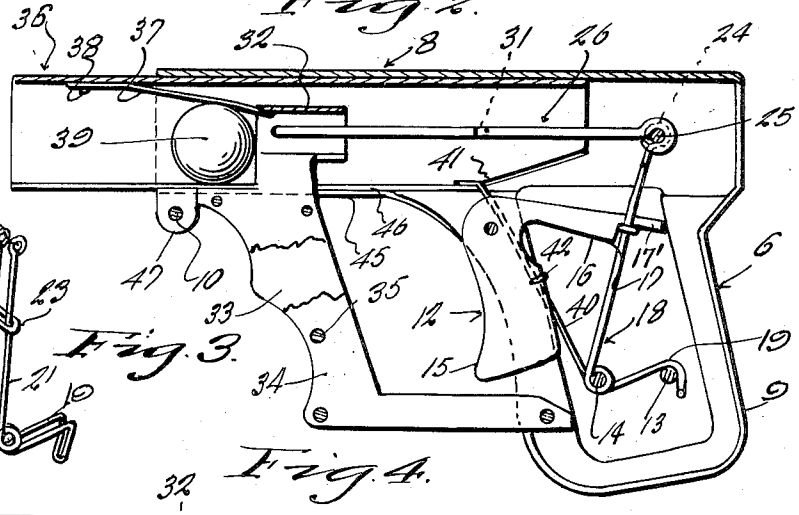

Fig. 3.

Fig. 4.

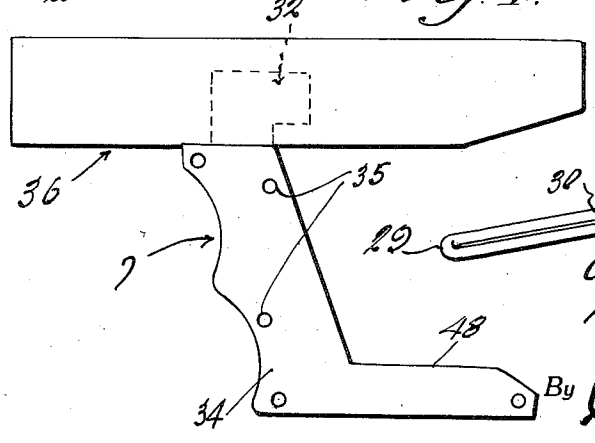

Fig. 5.

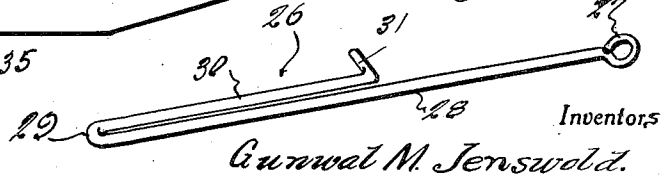

Inventors

Gunwal M. Jenswold.

Henry DeWeert

By Clarence O'Brien

Attorney

Patented Jan. 7, 1936 2,026,898

UNITED STATES PATENT OFFICE

2,026,898

TOY PISTOL

Gunwal M. Jenswold and Henry De Weert,
Chicago, Ill.

Application July 15, 1933, Serial No. 680,630

15 Claims. (Cl. 124—12)

Our invention relates generally to improvements in toy pistols, and an important object of our invention is to provide a toy pistol of the projectile impelling type, the form and mechanism of which is rugged and simple and easily manufactured.

Other objects and advantages of our invention will be apparent from a reading of the following description in connection with the drawing, wherein for purposes of illustration we have shown a preferred embodiment of our invention.

In the drawing:—

Figure 1 is a general side elevational view of the embodiment.

Figure 2 is a longitudinal vertical sectional view therethrough.

Figure 3 is a perspective view of the impeller spring.

Figure 4 is a side elevational view of the slide.

Figure 5 is a perspective view of the mallet.

Referring in detail to the drawing the numeral 5 generally designates the embodiment which comprises the one part handle structure generally designated 6 and the two part slide generally designated 7.

The handle portion includes the split barrel 8, the sections of which are mounted on the opposed sections 9 of the pistol grip, and connected by bolts 10 and 11, the bolt 11 acting as a pivot for the trigger generally designated 12.

Mounted within the pistol grip and connected to the pistol grip sections and extending across and between the same is a stop bar 13 and the pivot bar 14, appearing in Figure 2.

The trigger 12 is of wish-bone form, one arm being wide and appropriately shaped as indicated at 15 and the other arm 16 narrower and notched to provide the shoulder portion 17 and finger 17' forming a lock for the main impeller generally designated 18.

The impeller 18 comprises a single length of wire bent into U-form, the legs being then bent L-shaped as indicated at 19 and then bent into spiral convolutions as indicated at 20, one of which terminates in a straight leg 21 and the other in a second partly straight and partly bent leg 22 provided with the loop portion 23 which engages around the leg 21. The outer ends of the legs are provided with eyes 24 forming journals for a pivot 25 by which the impeller is connected to the mallet generally designated by the numeral 26.

The mallet 26 is shown in detail in Figure 5 and comprises the straight bar 28 having an eye 27 at one end, the bar 28 being hairpin bent at the point 29 to provide the short straight parallel arm 30 which is bent near its free end to provide a lateral projection 31. As shown in Figure 2 the position of the mallet 26 is within the cylindrical portion 32 of the slide, the lateral projection 31 being arranged to engage the inner end of the cylindrical portion 32 so as to prevent farther outward movement of the mallet when the pistol is "fired".

The slide generally designated 7 comprises three generally L-shaped flat plates which are connected together in superposed relation. The middle plate 33 and the opposite plates 34 are held together by the rivets or bolts 35 which pass therethrough. The side plates 34 have on their upper ends extensions which define the slide barrel 36, while the middle plate 33 has a portion bent to provide the tube 32 located concentrically within the slide barrel 36 as shown in Figure 2. A leaf spring 37 is connected at its outward end as indicated at 38 to the inside of the slide barrel and extends rearwardly into the tube 32 in such a way that a projectile ball 39 will be yieldably held in position in front of the tube 32 when pushed into the outer end of the slide barrel 36. This keeps the ball 39 in proper position to be struck by the portion 29 of the mallet 26 upon "firing" the pistol by pulling the trigger 12.

It will be observed that the slide barrel 36 operates closely but slidably in the main barrel 8 and that one leg 40 of a spring arm having one end coiled about the pivot 14 has its opposite end engaged with the rear end of the slide barrel as indicated at 41 to keep the entire slide in an outwardly projected position. Another leg of the said spring, as indicated at 42 pushes against the wide arm of the trigger 12 to keep it normally swung outwardly and to keep the other arm 16 thereof in a depressed rearward position so as to properly engage the shoulder 17 and finger 17' with the loop 23 of the impeller spring 18.

It will be observed that all of the parts described and shown may be formed conveniently of few or of many pieces of material and secured together in any desirable manner, but that the cost of the final product will be much reduced by forming them as much as possible in single units or pieces. In the embodiment shown the side sections of the pistol grip and the main barrel 8 are formed in a single piece cut so as to form the barrel 8 with the slot 45 extending in its lower side, the side sections and the pistol grip being wings of the original blank brought into opposition. The slide barrel is likewise slotted as indi-

cated at 46 and it and the two side plates 34 may be formed together of a single piece of material, the middle plate and the tube 32 being formed of a single piece of material separate from the side plates 34 and secured between the side plates 34 as already indicated. Tabs 47 traversed by the bolt 10 attend from the outer end of the side of the main barrel 8 and afford means for properly assembling it and provide an abutment for the outer end of the slide. The pin 13 and the pivot 14 in the pistol grip may be riveted as indicated at 14', 13' to hold the side sections of the pistol grip properly assembled.

It will be observed that the spirally bent portions 20 of the main impeller 18 form journals receiving the pivot 14 and that the L-shaped portion 19 is disposed over the pin 13, so that the legs 21 and 22 will spring toward the barrel and thrust the impeller outwardly to project the ball from the slide barrel when the legs 21, 22 are released from the position shown in Figure 2 by pulling the trigger. The eye 27 on the inward end of the impeller is pivoted between the eyes 24 on the upper ends of the legs 21, 22 by the pivot 25.

Figure 2 shows the pistol "loaded", with the finger 17' of the arm 16 of the trigger located between the legs 21, 22 of the impeller and the shoulder 17 engaged with the loop 23 of the impeller, whereby the impeller is held in the pushed back position of tension, wherein rearward pressure upon the portion 15 of the trigger will swing the arm 16 thereof upwardly so as to disengage the shoulder 17 and the finger 17' from the impeller loop 23 and thereby permit the legs 21, 22 to swing outwardly on opposite sides of the trigger arm 16 and thrust the mallet 26 through the tube 32 and against the ball 39 so as to project and eject the same.

The pistol is cocked by pulling back upon the slide 7. So doing will cause the lower part 48 of the slide to travel into the pistol grip just below the trigger, and the rear end of the tube 32 to engage the lateral projection 31 of the mallet, the combination of these movements causing the impeller to move to the position shown in Figure 2. As the impeller reaches this position, the spring 42 acting upon the trigger will depress the arm 16 of the trigger so as to engage the shoulder 12 and finger 17' with the loop 23. The slide is then released to be moved outwardly into normal position by the spring 40, whereupon the pistol is fully cocked. When a ball 39 has been placed into the muzzle of the slide barrel 36 so as to be held by the spring 37, the pistol is ready to be "fired" again.

Although we have shown and described herein a preferred embodiment of our invention, it is to be definitely understood that we do not desire to limit the application of the invention thereto, and any change or changes may be made in material, structure and arrangement of parts, within the spirit of the invention and the scope of the subjoined claims.

What is claimed is:—

1. A toy pistol of the character described comprising a body including a pistol grip and a tubular portion, a second body including a projectile receiving and guiding barrel and a frame, said barrel having a portion slidably supported for axial movement within said tubular portion and said frame having a portion slidably supported within said pistol grip, a ball retainer mounted in said barrel and trigger operated spring pressed impeller means having a portion working in said barrel and in said ball retainer to strike and project a ball located in said barrel.

2. In a toy pistol, a pair of slidably telescoped barrels, one of said barrels having a pistol grip and the other barrel a handle, the inner one of said pair of barrels having a projectile receiving and guiding means, a mallet having a portion operating in the inner barrel for striking and projecting a missile in the inner barrel, spring pressed impeller means in said pistol grip and having operative connection with said mallet, a trigger pivoted on said pistol grip and having portions engageable with said impeller to hold the impeller in retracted position, said trigger being operable to release said impeller means into action, a portion of said mallet being engageable by a portion of said projectile receiving and guiding means to retract said impeller means when said handle is operated.

3. In a toy pistol, a plate curvedly bent at its middle into substantially circular form to define an outer barrel having a slot and a pair of opposed wings, said wings being connected together and forming a pistol grip, a second plate curvedly bent at its middle into substantially circular form providing an inner barrel having a slot and a second pair of opposed wings, said inner barrel being slidable in said outer barrel, a third plate disposed between and connected to the wings of said second pair of opposed wings, said second pair of wings and said third plate constituting a cocking handle slidable in the slot of the outer barrel, a mallet supported in said inner barrel, spring actuated propelling means on said pistol grip operatively connected to said mallet, an element carried by said third plate within said inner barrel and engageable with a part of said mallet to retract the same and thereby cock said propelling means when said cocking handle is operated, and a trigger carried by said pistol grip and engageable with said propelling means to hold the same cocked, said trigger being operable to release said propelling means to cause said mallet to strike and eject a missile from said inner barrel.

4. In a toy pistol, a plate curvedly bent at its middle into substantially circular form to define an outer barrel having a slot and a pair of opposed wings, said wings being connected together and forming a pistol grip, a second plate curvedly bent at its middle into substantially circular form providing an inner barrel having a slot and a second pair of opposed wings, said inner barrel being slidable in said outer barrel, a third plate disposed between and connected to the wings of said second pair of opposed wings, said second pair of wings and said third plate constituting a cocking handle slidable in the slot of the outer barrel, a mallet supported in said inner barrel, spring actuated propelling means on said pistol grip operatively connected to said mallet, an element carried by said third plate within said inner barrel and engageable with a part of said mallet to retract the same and thereby cock said propelling means when said cocking handle is operated, and a trigger carried by said pistol grip and engageable with said propelling means to hold the same cocked, said trigger being operable to release said propelling means to cause said mallet to strike and eject a missile from said inner barrel, and a leaf spring anchored at one end to said inner barrel and having its free end adjacent to the outward side of said element and arranged to frictionally hold a

missile in "firing" position at said outward side of said element.

5. In a toy pistol, a plate curvedly bent at its middle into substantially circular form to define an outer barrel having a slot and a pair of opposed wings, said wings being connected together and forming a pistol grip, a second plate curvedly bent at its middle into substantially circular form providing an inner barrel having a slot and a second pair of opposed wings, said inner barrel being slidable in said outer barrel, a third plate disposed between and connected to the wings of said second pair of opposed wings, said second pair of wings and said third plate constituting a cocking handle slidable in the slot of the outer barrel, a mallet supported in said inner barrel, spring actuated propelling means on said pistol grip operatively connected to said mallet, an element carried by said third plate within said inner barrel and engageable with a part of said mallet to retract the same and thereby cock said propelling means when said cocking handle is operated, and a trigger carried by said pistol grip and engageable with said propelling means to hold the same cocked, said trigger being operable to release said propelling means to cause said mallet to strike and eject a missile from said inner barrel, said element being cylindrical in form and axially arranged concentrically spaced from the interior walls of said inner barrel.

6. In a toy pistol, a plate curvedly bent at its middle into substantially circular form to define an outer barrel having a slot and a pair of opposed wings, said wings being connected together and forming a pistol grip, a second plate curvedly bent at its middle into substantially circular form providing an inner barrel having a slot and a second pair of opposed wings, said inner barrel being slidable in said outer barrel, a third plate disposed between and connected to the wings of said second pair of opposed wings, said second pair of wings and said third plate constituting a cocking handle slidable in the slot of the outer barrel, a mallet supported in said inner barrel, spring actuated propelling means on said pistol grip operatively connected to said mallet, an element carried by said third plate within said inner barrel and engageable with a part of said mallet to retract the same and thereby cock said propelling means when said cocking handle is operated, and a trigger carried by said pistol grip and engageable with said propelling means to hold the same cocked, said trigger being operable to release said propelling means to cause said mallet to strike and eject a missile from said inner barrel, said element being cylindrical in form and axially arranged concentrically spaced from the interior walls of said inner barrel, said mallet including an outward part composed of a pair of spaced longitudinal bars connected by a bight portion, said bars being loosely slidable in said element and said bight portion being arranged for striking the missile, a lateral stop projection on one of said bars constituting said part of the mallet.

7. A toy pistol comprising a stationary barrel, a handle depending therefrom, a projecting spring mounted on the handle and extending into said barrel, a trigger pivoted to said handle and engageable with said spring to hold the spring in retracted cocked position, said trigger being operable to release said spring toward extended projecting position, a cocking barrel slidably telescoped on said stationary barrel and having a handle, a second spring carried by the first handle and engaged with said cocking barrel in a manner to yieldably urge said cocking barrel toward an outward position, and a mallet having a portion longitudinally disposed relative to said stationary barrel and said cocking barrel and connected to the first spring, said cocking barrel having a portion operatively engageable with said longitudinal portion of the mallet while said cocking barrel is in an inward position, whereby said first spring is urged into said cocked retracted position.

8. A toy pistol comprising a stationary barrel, a handle depending therefrom, a projecting spring mounted on the handle and extending into said barrel, a trigger pivoted to said handle and engageable with said spring to hold the spring in retracted cocked position, said trigger being operable to release said spring toward extended projecting position, a cocking barrel slidably telescoped on said stationary barrel and having a handle, a second spring carried by the first handle and engaged with said cocking barrel in a manner to yieldably urge said cocking barrel toward an outward position, and a mallet having a portion longitudinally disposed relative to said stationary barrel and said cocking barrel and connected to the first spring, said cocking barrel having a portion operatively engageable with said longitudinal portion of the mallet while said cocking barrel is in an inward position, whereby said first spring is urged into said cocked retracted position, said cocking barrel being free of said longitudinal portion of the mallet so that the cocking barrel is returned by the second spring toward inoperative position upon release of the handle of said cocking barrel.

9. A toy pistol comprising a main barrel having a handle, a projectile ejecting spring mounted in said handle, a projectile striking mallet operating in said main barrel and pivotally connected to said spring, trigger means operative both for holding and for releasing said spring from contracted condition, a secondary barrel slidably telescoped in said main barrel including a fixed member slidably positioning said mallet in longitudinal alignment therewith, said mallet including an element arranged to be engaged by said member when said secondary barrel is pushed inwardly in said main barrel toward said handle whereby said spring is moved into cocked position.

10. A toy pistol comprising a main barrel having a handle, a projectile ejecting spring mounted in said handle, a projectile striking mallet operating in said main barrel and pivotally connected to said spring, trigger means operative both for holding and for releasing said spring from contracted condition, a secondary barrel slidably telescoped in said main barrel including a fixed member slidably positioning said mallet in longitudinal alignment therewith, said mallet including an element arranged to be engaged by said member when said secondary barrel is pushed inwardly in said main barrel toward said handle whereby said spring is moved into cocked position, a retaining spring in said secondary barrel positioned to yieldably hold a projectile engaged with said fixed member in a position to be struck and ejected by said mallet.

11. A toy pistol comprising a main barrel having a handle, a projectile ejecting spring mounted in said handle, a projectile striking mallet operating in said main barrel and pivotally connected to said spring, trigger means operative both for holding and for releasing said spring from con-

tracted condition, a secondary barrel slidably telescoped in said main barrel including a fixed member slidably positioning said mallet in longitudinal alignment therewith, said mallet including an element arranged to be engaged by said member when said secondary barrel is pushed inwardly in said main barrel toward said handle whereby said spring is moved into cocked position, said secondary barrel having an exterior operating handle.

12. A toy pistol comprising a main barrel having a handle, a projectile ejecting spring mounted in said handle, a projectile striking mallet operating in said main barrel and pivotally connected to said spring, trigger means operative both for holding and for releasing said spring from contracted condition, a secondary barrel slidably telescoped in said main barrel including a fixed member slidably positioning said mallet in longitudinal alignment therewith, said mallet including an element arranged to be engaged by said member when said secondary barrel is pushed inwardly in said main barrel toward said handle whereby said spring is moved into cocked position, said spring including a spring element engaged with said secondary barrel and normally maintaining said secondary barrel in its outward position.

13. A toy pistol comprising a handle including a barrel extending therefrom, a normally axially outwardly positioned tube slidably telescoped in said barrel and including an interior tube acting as a ball stop and mallet guide, a mallet having a first part slidably supported in said interior tube and a second part to be engaged by said interior tube when said tube is in a pushed-in position, a mallet actuating spring in said handle operatively engaged with said mallet for ejecting a projectile from said tube, trigger means for holding and releasing said actuating spring from a cocked position, said tube being arranged to be pushed from an axially outward to an axially inward position for cocking said spring.

14. A toy pistol comprising a handle including a barrel extending therefrom, a normally axially outwardly positioned tube slidably telescoped in said barrel and including an interior tube acting as a ball stop and mallet guide, a mallet having a first part slidably supported in said interior tube and second part to be engaged by said interior tube when said tube is in a pushed-in position, a mallet actuating spring in said handle operatively engaged with said mallet for ejecting a projectile from said tube, trigger means for holding and releasing said actuating spring from a cocked position, said tube being arranged to be pushed from an axially outward to an axially inward position for cocking said spring, and means normally yieldably holding said tube in an axially outward position.

15. A pistol of the class described, comprising a barrel, a handle connected therewith, a second barrel slidably arranged in the first barrel, a handle connected with the second barrel, projectile holding means in the second barrel, impeller means for projecting a projectile from the pistol, a trigger for holding said means in cocked position, the trigger releasing such means when manually operated, means operated by rearward movement of the second barrel by its handle for moving the projecting means to cocked position.

GUNWAL M. JENSWOLD.
HENRY DE WEERT.