April 29, 1947. C. V. LITTON 2,419,578

ELECTRON DISCHARGE DEVICE

Filed July 9, 1943

Fig. 1.

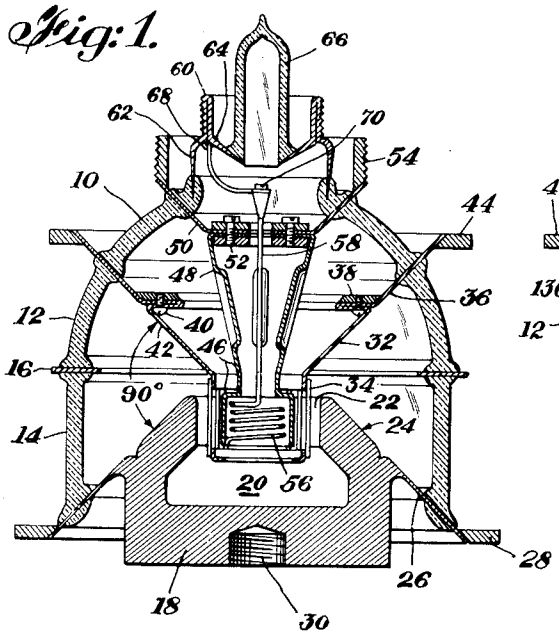

Fig. 2.

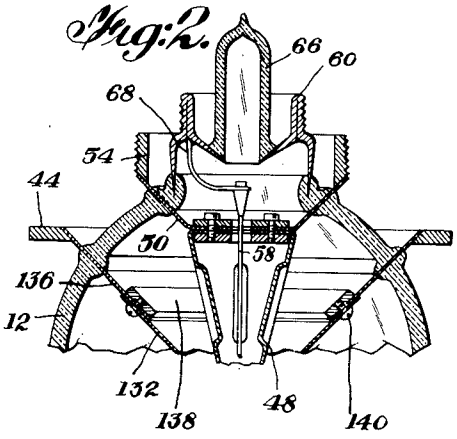

Fig. 4.

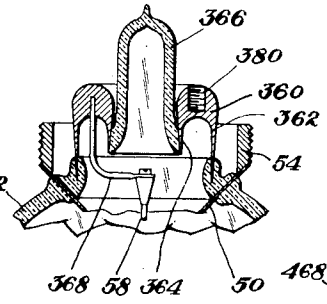

Fig. 3.

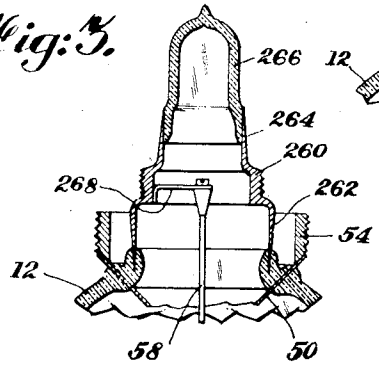

Fig. 5.

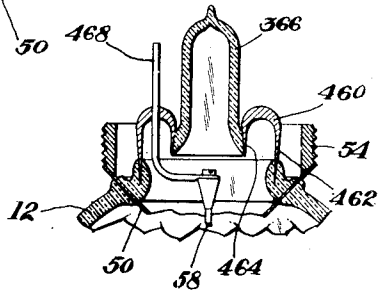

INVENTOR.
CHARLES V. LITTON

BY

ATTORNEY

Patented Apr. 29, 1947

2,419,578

UNITED STATES PATENT OFFICE

2,419,578

ELECTRON DISCHARGE DEVICE

Charles V. Litton, Redwood City, Calif., assignor to Federal Telephone and Radio Corporation, Newark, N. J., a corporation of Delaware

Application July 9, 1943, Serial No. 494,043

14 Claims. (Cl. 250—27.5)

1

This invention relates to improvements in electron discharge devices, and more particularly to a novel vacuum tube structure adapted for use at extremely high frequencies.

An object of the present invention is to provide an improved vacuum tube of optimum geometry of parts for ultra-high frequency application.

Another object of this invention is to provide a vacuum tube in which the product of the inductance and capacitance of the grid and anode leads is minimized to the greatest possible extent.

A further object of this invention is to provide a vacuum tube embodying an improved geometry of parts, which at the same time may be built and assembled in a relatively simple manner.

Generally speaking, this invention may be defined as comprising the constructions and combinations recited in the annexed claims and illustrated in certain embodiments in the drawings accompanying and forming a part of this application, wherein:

Fig. 1 is a longitudinal cross-sectional view of a preferred form of vacuum tube according to the present invention,

Fig. 2 is a partial longitudinal cross-sectional view illustrating a slightly modified form of construction;

Fig. 3 is a partial longitudinal cross-sectional view illustrating another modified detail;

Fig. 4 is a partial longitudinal cross-sectional view illustrating another modified detail of construction;

Fig. 5 is a partial longitudinal cross-sectional view illustrating a still further modified structural detail.

In the preferred form of tube according to this invention, illustrated in Fig. 1, the construction will embody a general bell-shaped envelope 10 of insulating material, preferably glass. This envelope will be formed in two sections, an upper section 12 carrying the cathode and grid elements of the tube, and an anode-carrying lower section 14, joined together by a thin metal ring 16. This ring provides means for effecting a joint between the upper and lower sections of the glass envelope by the use of high frequency heating and may have a coefficient of expansion substantially the same as that of the glass envelope; for example, such a ring may be made of "Allegheny Sealmet" or an equivalent chromium iron alloy. This will permit heating at the juncture point without overheating the previously formed grid and anode seals.

The bottom of the bell-shaped envelope 10 is covered by the anode structure generally indicated at 18. This anode may be provided with a hollow core section 20 connected to the outside through an annular passage 22 whose inner surface forms the anode electrode itself. The outside of one end of the anode 18 beginning with the upper edge of the annular passage 22 is formed with a downwardly-extending frusto-conical surface 24 with an integral conical continuation 26 sealed to the lower rim of the envelope. A connector ring 28 may be attached to the projecting end of the edge outside of the envelope. If desired, a cooling fin structure (not shown) may be attached to the outer end of the anode structure by screwing it into the threaded bore 30 and soldering or brazing it thereto. The upper portion 12 of the envelope carries a grid support which may consist of a grid cone 32 having attached thereto at its smaller end a substantially cylindrical grid 34 positioned within the anode-electrode forming passage 22, and an upper frusto-conical cone seal 36 projecting through the walls of the upper envelope section 12. In accordance with the preferred form of construction illustrated in Fig. 1, a flat backing ring 38 is positioned within the cone seal 36, the smaller end of the cone seal 36 and the large end of the grid cone 32 being bent inwardly to form adjacent juncture surfaces which are attached to one another and to the backing ring 38 by suitable means such as screws 40. This arrangement has the advantage that the heads of the screws are enclosed within the conical grid support but in such case the grid cone must be provided with suitable openings 42 through which the screws can be inserted and tightened. A connector ring 44 may be attached to the wide end of the cone seal 36, outside of the envelope.

Before describing further details of the vacuum tube structure of the present invention, attention is particularly directed to the relationship between the conical grid support and the adjacent frusto-conical anode surface. The angle formed between these two conical sections is illustrated as being approximately 90°, an arrangement which minimizes the product of inductance and capacitance of these two leads. If the angle is substantially smaller than 90°, the grid-anode capacitance between the leads will gradually increase, whereas if the angle is substantially greater than 90° the grid-anode inductance will increase. The arrangement described, therefore, permits the optimum relationship between the grid and anode leads while still permitting the construction of a strong conical

grid support and good mechanical arrangement of the anode.

In the form of tube taken by way of example, I have utilized an indirectly heated cathode **46** attached to the end of a cathode supporting structure **48** which, at its upper end is attached, in turn, to a generally frustro-conical cathode cone seal **50**. The connection may be made in any suitable manner as by screws **52**. To the outer end of the cone seal **50** is preferably attached an externally threaded connector ring **54**, by means of which connection may be made to a tubular line (not shown). The heating coil **56** within the cathode electrode **46** will be attached at one end to the electrode proper and at its other end is provided with an upstanding lead **58** positioned substantially centrally within the envelope. At the upper end of the envelope is positioned a ring-like structure **60** having an extending annular knife-edge **64**. To the latter may be sealed the glass tubulation **66**. The upper end of the lead **58** will be attached to the ring-shaped member **60** as by conductor **68**. The latter may be removably attached to the top of the lead as by connector **70** which, it will be noted, is positioned directly beneath the tubulation **66**. Accordingly, after the ring-shaped member **60** with attached conductor **68** is sealed to the top of the envelope **10**, the other end of conductor **68** is still accessible for connection to the lead **58** through the top of the tube, and through the open tubulation **66** after this connection is made, evacuation of the tube may follow. The outside of the ring-shaped member **60** may be threaded, as shown, for attachment to a tubular line.

Fig. 2 illustrates a slightly different form of grid support which is of slightly simpler construction than that shown in Fig. 1. In this case the adjacent edges of the grid cone **132** and the cone seal **136** are not bent flat but merely overlap. A strengthening ring **138** is positioned within this overlapping section, and the overlapping sections plus the ring **138** may be rigidly connected together by means such as screws **140**.

In Fig. 1 the ring-shaped member was illustrated as a single integral piece of metal in which the annular knife edge **64** was formed on a reversally-bent back and inwardly-directed portion of the ring proper. In Fig. 3, on the contrary, the ring **260** is formed with downwardly directed annular knife edge **262** and an upwardly directed knife edge **264**, to whose inner surface the tubulation **266** is sealed. In this case the cathode lead **58** may extend further upwardly to a slight degree and will be directly connected to the ring **260** through the conductor **268**. Again, however, the connection between conductor **268** and the lead **58** is readily accessible, being directly below the tubulation **266**.

Fig. 4 shows a still further modified form of cathode lead-in construction. In this case the ring-shaped member is in the form of a hollow half toroid **360**, with an annular knife-edge extension **362** forming a sealing connection with the upper portion **12** of the glass envelope. The internal, smaller annular knife edge **364** also projects downwardly and the glass tubulation **366** is sealed to its inner surface. The conductor **368** from the lead **58** may, in this case, project directly into and form electrical connection with the body of the half-toroid **360**, which also may be provided with a threaded socket **380** for the reception of a threaded cathode conductor.

The construction illustrated in Fig. 5 is quite similar to that shown in Fig. 4, except that in this

case the half-toroid end member **460** is not as thick as that shown in Fig. 4 and the conductor **468** from the lead **58** may extend directly through the end member **460**. In this case, the larger-diameter knife edge **462** will be sealed to the upper portion **12** of the glass envelope, while the smaller annular knife edge **464** is sealed to the tubulation **366**. If the end member **460** is made relatively thin as compared to the end member **360** of Fig. 4, it is preferably formed of a suitable metal which has the same coefficient of expansion as the glass of the envelope. In the construction illustrated in both Figs. 4 and 5, the accessibility of the lead **58** for the purposes of connecting a conductor thereto, will be clear as shown in Figs. 1, 2 and 3.

While I have described above the principles of my invention in connection with specific apparatus and particular modifications thereof, it is to be clearly understood that this description is made only by way of example and not as a limitation on the scope of my invention as set forth in the objects and the accompanying claims.

I claim:

1. An electron discharge device comprising a hollow insulating envelope open at both ends, an anode structure closing one end of said envelope, said anode structure comprising a metallic mass having a cylindrical central bore in one end the outer surface of said mass about said bore sloping downwardly in all directions forming a generally frusto-conical face, and integral extensions on said conical face projecting through and forming a sealing connection with the edge of the one end of said insulating envelope, a grid positioned within said cylindrical bore, a generally inverted frusto-conical metallic grid support attached at its smaller end to said grid and extending upwardly and outwardly through the walls of said envelope, a cathode positioned within said grid, and cathode support means closing the other end of said envelope.

2. The combination according to claim 1, in which the angle between the inverted frusto-conical grid support and the frusto-conical anode surface is approximately 90°.

3. The combination according to claim 1, in which said insulating envelope is divided into upper and lower sections, the upper section holding the grid and cathode supports, and the lower section the anode structure, and means including a thin metallic ring sealing the two sections of the envelope together.

4. An electron discharge device comprising a generally bell-shaped insulating envelope, an anode structure closing the bottom of said bell-shaped envelope, said anode structure comprising a solid metallic mass having a relatively large hollow core and a cylindrical central passage through one end of said mass communicating with said hollow core, the outer surface of said mass about said passage sloping downwardly in all directions forming a generally frusto-conical face, and an integral extension on said conical face projecting through and forming a sealing connection with the lower rim of said bell-shaped envelope, a substantially cylindrical grid positioned within said cylindrical central passage, an inverted frusto-conical metallic grid support attached at its smaller end to said cylindrical grid and extending upwardly and outwardly through said envelope, a cathode positioned within said grid, and cathode support means extending through the top of the bell-shaped envelope.

5. The combination according to claim 4, in which the angle between the inverted frusto-

conical grid support and the frusto-conical anode surface is approximately 90°.

6. The combination according to claim 1, in which said grid support comprises a hollow frusto-conical grid cone having its smaller end attached to said cylindrical grid and having its larger end turned under in the form of a flat ring, and a hollow frusto-conical cone seal having its smaller end turned under in the form of a flat ring and its larger end extending through the envelope, and means attaching said turned-over flat rings together, said means including a strengthening ring connected to the juncture of said two turned over flat rings and positioned inside of the cone seal.

7. The combination according to claim 4, in which said grid support comprises a hollow frusto-conical grid cone having its smaller end attached to said cylindrical grid, and a hollow frusto-conical cone seal having its smaller end overlapping the larger end of the grid cone and its larger end extending through the envelope, and means attaching the overlapping ends together, said means including a strengthening ring positioned at the joint within the overlapping ends.

8. The combination according to claim 4, in which said bell-shaped envelope is divided into upper and lower sections, the upper section holding the grid and cathode supports and the lower section the anode structure, and means including a thin metal ring having substantially the same coefficient of expansion as the envelope material, sealing the two sections of the envelopes together.

9. The combination according to claim 4, in combination with a first connector ring attached outside of the envelope to the larger end of the grid support, and a second connector ring attached outside of the envelope to the projecting integral extensions of said anode structure.

10. The combination according to claim 4, in combination with an externally threaded connector ring positioned outside of said envelope and attached to the projecting portions of said cathode support.

11. An electron discharge device comprising a generally bell-shaped insulating envelope, an anode structure closing the bottom of said bell-shaped envelope, said anode structure comprising a metallic mass having a cylindrical bore in one end thereof, the outer surface of said mass about said bore sloping downwardly in all directions forming a generally frusto-conical face, and integral extensions on said conical face projecting through and forming a sealed connection with the lower edge of said bell-shaped envelope, a grid positioned within said bore, an inverted generally frusto-conical metallic grid support attached at its smaller end to said grid and extending upwardly and outwardly through said envelope, a cathode positioned within said grid, cathode support means extending through the top of the bell-shaped envelope, a cathode lead rising substantially upwardly from said cathode to the top of said bell-shaped envelope, a generally ring-shaped metal member of substantial thickness having an externally downwardly extending annular knife edge sealed to the top of said envelope, positioned substantially coaxially with respect to said lead and an inner annular knife edge of smaller diameter than said first knife-edge, a conductor attached at one end to said metal ring-shaped member, means connected to the other end of said conductor to the upper end of said centrally positioned cathode lead and sealing means across said annular knife edge.

12. The combination according to claim 11, in which said sealing means comprises a glass envelope sealed to the inner surface of said smaller annular knife-edge.

13. The combination according to claim 11, in which said conductor extends outwardly through said ring-shaped member.

14. The combination according to claim 11, in which said ring-shaped member is in the form of a hollow half-toroid.

CHARLES V. LITTON.

REFERENCES CITED

The following references are of record in the file of this patent:

UNITED STATES PATENTS

Number	Name	Date
2,345,794	Chevigny	Apr. 4, 1944

FOREIGN PATENTS

Number	Country	Date
349,405	Italian	June 15, 1937
414,753	British	Aug. 9, 1934