Dec. 6, 1955 W. E. LEIBING 2,725,861

INJECTION FUEL PUMP FOR INTERNAL COMBUSTION ENGINES

Filed April 10, 1953 3 Sheets-Sheet 1

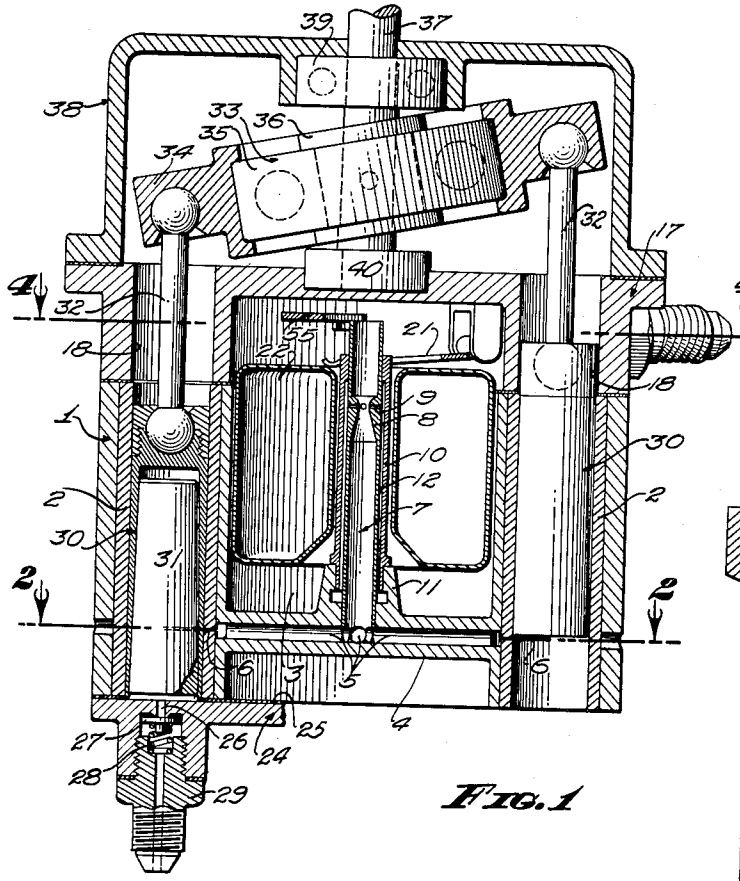

FIG. 1

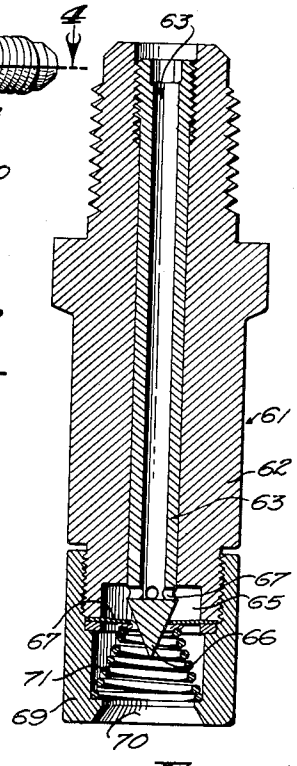

FIG. 3

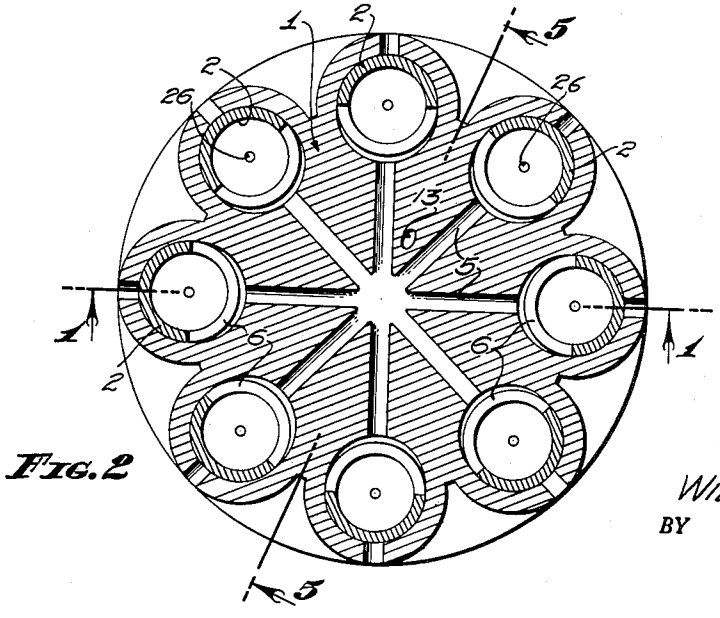

FIG. 2

INVENTOR.
WILLIAM E. LEIBING
BY
Lyon & Lyon
ATTORNEYS

Dec. 6, 1955 W. E. LEIBING 2,725,861

INJECTION FUEL PUMP FOR INTERNAL COMBUSTION ENGINES

Filed April 10, 1953 3 Sheets-Sheet 2

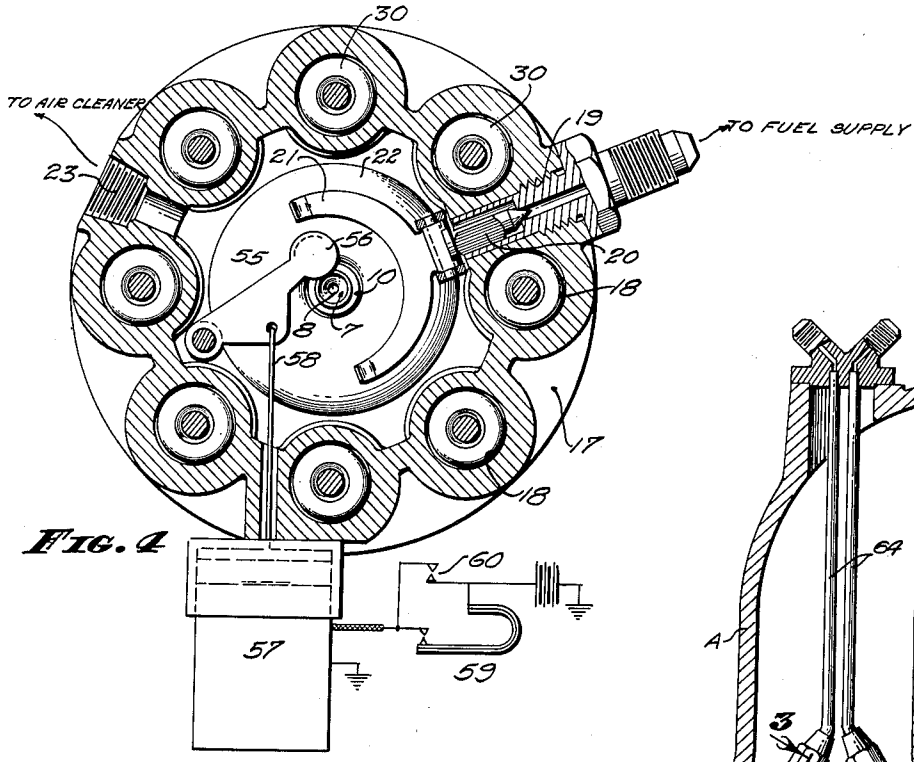

FIG. 4

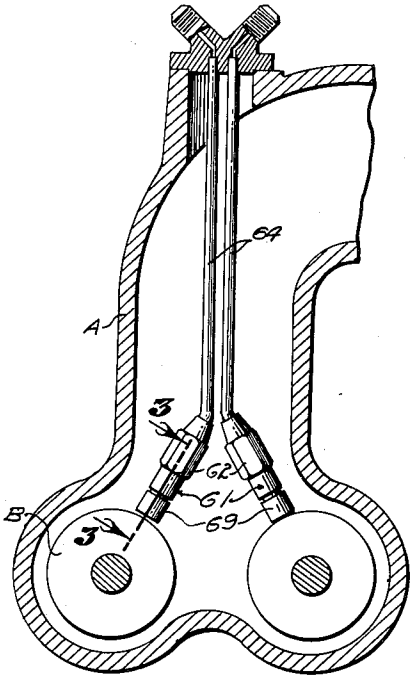

FIG. 6

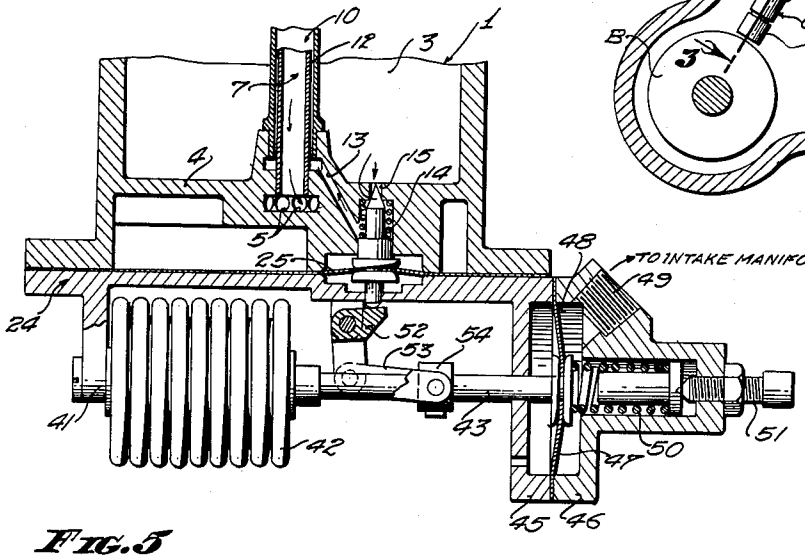

FIG. 5

INVENTOR.
WILLIAM E. LEIBING
BY Lyon & Lyon
ATTORNEYS

Dec. 6, 1955 W. E. LEIBING 2,725,861

INJECTION FUEL PUMP FOR INTERNAL COMBUSTION ENGINES

Filed April 10, 1953 3 Sheets-Sheet 3

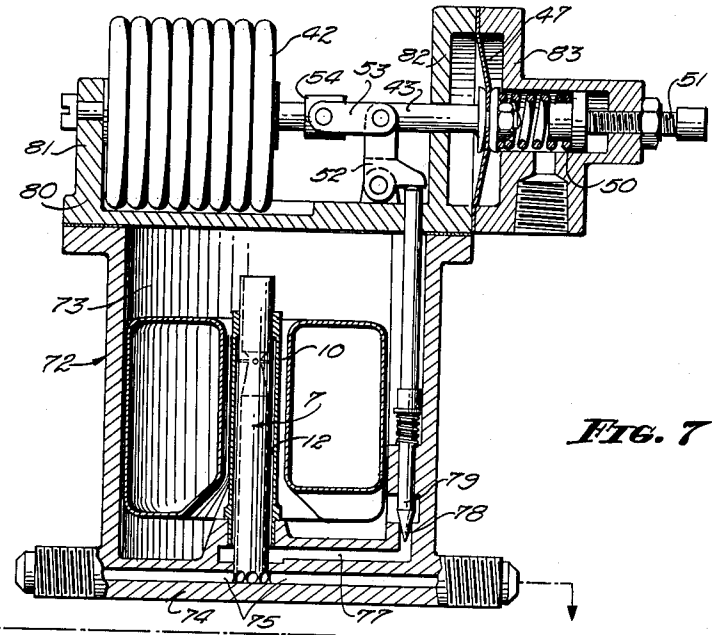

FIG. 7

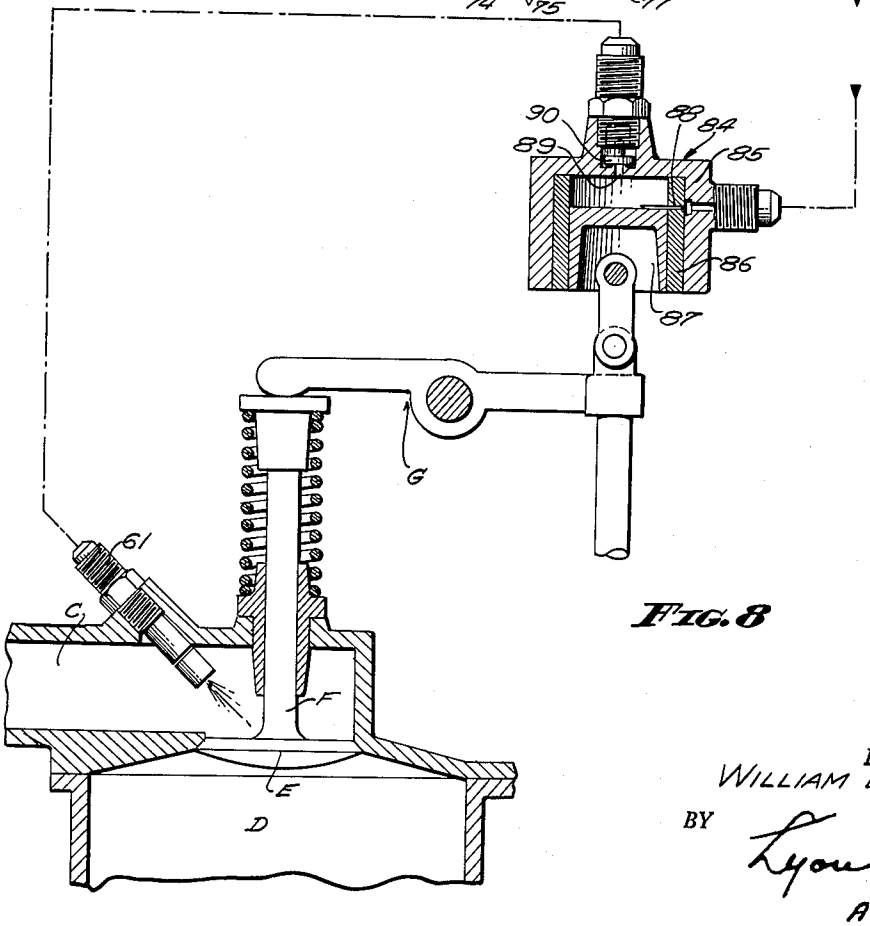

FIG. 8

INVENTOR.
WILLIAM E. LEIBING
BY
Lyon & Lyon
ATTORNEYS

United States Patent Office 2,725,861 Patented Dec. 6, 1955

2,725,861

INJECTION FUEL PUMP FOR INTERNAL COMBUSTION ENGINES

William E. Leibing, Redwood City, Calif.

Application April 10, 1953, Serial No. 348,067

9 Claims. (Cl. 123—119)

My invention relates to injection fuel pumps for internal combustion engines, and included in the objects of my invention are:

First, to provide an injection fuel pump for internal combustion engines which is capable of supplying an extremely small and consistently exact quantity of fuel to each cylinder, the quantity being a fraction of a drop if need be, thus completely avoiding the tendency common in solid fuel injection systems of collecting drop fractions and intermittently and irregularly discharging them into the engine cylinders, which causes rough performance.

Second, to provide an injection fuel pump which is not limited to engines of large horsepower but by reason of its ability to supply small quantities of fuel with extreme volumetric accuracy, is ideally suited for engines of comparatively low horsepower, for example, in the range of a hundred horsepower or less.

Third, to provide an injection fuel pump for internal combustion engines which is extremely flexible in operation, that is, which is capable of supplying the precise amounts of fuel demanded by each cylinder for all speed and load conditions of the engine, whether such conditions be constant or changing, either rapidly or slowly, thus providing an injection fuel pump which is particularly suited for the variable operating conditions inherent in the operation of automobile engines, and is equally suitable for engines such as boat, aircraft or stationary engines where substantially constant speed is the typical condition.

Fourth, to provide an injection fuel pump for internal combustion engines wherein measured amounts of air are introduced with each fuel injection so that the fuel is thoroughly atomized.

Fifth, to provide an injection fuel pump for internal combustion engines which may be arranged as a compact multiple cylinder pump mechanically connected with the engine and provided with feed lines to each cylinder, or may be divided into individual units, one associated with each cylinder, and driven by the valve-operating mechanism of the engine.

Sixth, to provide an injection fuel pump for internal combustion engines which may incorporate automatic means to compensate for changes in air density due to changes in altitude.

Seventh, to provide an injection fuel pump which materially reduces the difficulty of starting an internal combustion engine in cold weather.

Eighth, to provide an injection fuel pump which incorporates a novel means wherein the pistons and cylinders may be fitted to close tolerances without correspondingly exact manufacturing tolerances.

Other objects and advantages of this invention will be apparent from the following detailed description of the preferred embodiment thereof, as illustrated in the accompanying drawings in which:

Figure 1 is a longitudinal sectional view of my fuel injection pump taken substantially along the line 1—1 of Figure 2.

Figure 2 is a transverse sectional view thereof taken through 2—2 of Figure 1.

Figure 3 is an enlarged longitudinal sectional view of one of the fuel injection nozzles taken through 3—3 of Figure 6.

Figure 4 is a transverse sectional view through 4—4 of Figure 1.

Figure 5 is a fragmentary sectional view through 5—5 of Figure 2.

Figure 6 is a fragmentary diagrammatical view showing the intake manifold and intake valves of two adjacent cylinders of an internal combustion engine and indicating the relationship of the injection nozzles connected with my injection fuel pump.

Figure 7 is a longitudinal sectional view of a modified form of my injection fuel pump showing the float chamber and associated parts.

Figure 8 is a substantially diagrammatical view of our modified injection fuel pump showing one of the pump units in association with a cylinder of an internal combustion engine and the valve-operating means therefor.

Reference is first directed to Figures 1–6. In the construction here illustrated there is provided a cylinder block 1 having a ring of parallelly disposed cylinders, each fitted with a cylinder liner 2. The ring of cylinders defines a central float chamber 3 closed at its lower end by a partition 4 joining the cylinders. Within the partition 4 there is provided radial passages 5, one for each cylinder. These passages intersect a clearance channel formed in each cylinder. Each liner is provided with a slit 6 registering with the corresponding clearance channel and radial passage 5.

Centered in the partition 4 and extending upwardly in centered relation with the float chamber is a venturi tube 7 having a venturi throat 8 near its upper end, and radial ports 9 communicating with the throat 8. The venturi tube communicates with the radial ports 9. Surrounding the venturi tube 7 is a sleeve 10, the lower end of which is secured in a boss 11, centered in the partition 4 and surrounding the venturi tube.

The upper end of the sleeve 10 is sealed to the venturi tube 7 but the remainder of the sleeve is spaced therefrom to form an annular fuel supply passage 12 communicating with an annular channel formed in the boss 11. This channel is connected by a passage 13 to a valve cavity 14 formed in the underside of the partition 4, as shown best in Figure 5. The valve cavity communicates with the bottom of the float chamber 3 through a port 15 adapted to be controlled by a needle valve 16 movable in the valve cavity 14. Operation of the needle valve will be described in more detail hereinafter.

The cylinder block 1 receives a top cover structure 17 having a ring of cylindrical extensions 18 coaxial with the cylinder liners 2 in the cylinder block 1. Between a pair of the cylindrical extensions 18 there is provided a radial inlet port which receives an inlet fitting 19 as shown in Figure 4. The fitting 19 receives a needle valve 20 to control flow of fuel into the float chamber. The top cover structure is recessed to form an extension of the float chamber. Within this extension there is pivotally mounted a needle valve shutoff lever 21 so arranged as to be engaged by an annular float 22 mounted in the float chamber and surrounding the sleeve 10. The top cover structure is provided with an air intake port 23 adapted to be connected with the air cleaner (not shown) of an internal combustion engine. The inlet fitting 19 is connected to the fuel supply of the internal combustion engine.

The lower end of the cylinder block is provided with a bottom cover structure 24. Between the bottom cover

structure and the cylinder block is a combination gasket and diaphragm 25. The bottom cover structure is provided with a ring of downwardly directed outlet ports 26 disposed in coaxial relation with the cylinder liners 2. Each outlet port is controlled by a check valve 27 in the form of a disk adapted to be forced upwardly against the outlet port by a spring 28, retained by a fitting 29. Each fitting is arranged for connection to a conduit (not shown) for communication with corresponding cylinders of an internal combustion engine.

Each cylinder liner 2 receives a piston 30. Each piston is in the form of an inverted cup forming a skirt of substantial axial length. The inner wall of each skirt is tapered. Each piston receives a tapered skirt spreading cone 31. By properly positioning the cone 31 of each piston the exact operating clearances between the piston skirt and the walls of the corresponding cylinder liner may be obtained. This is of substantial importance for the clearances should be extremely small; for example, the clearances required for pistons and cylinders in analogous applications involve a clearance of not more than ten millionths of an inch with a tolerance for the piston of plus nothing and minus three millionths of an inch. Normal manufacturing tolerances for devices of similar size range from two to three thousandths of an inch. Thus it is possible to manufacture my piston and cylinder units with the normal manufacturing tolerances of two to three thousandths of an inch and compensate by adjustment of the cones 31.

The pistons are suitably joined to connecting rods 32 which project upwardly through the cylindrical extensions 18 and are joined to a wobble plate structure 33. The wobble plate structure includes an outer ring 34 into which the connecting rods are fitted, the bearing 35 journaling the ring 34, and a hub 36 mounted in angular relation on a drive shaft 37. The wobble plate structure is enclosed in a housing 38 which fits over the cover structure 17. The drive shaft is supported by bearings 39 and 40. While a wobble plate operating means is shown for the pistons 30, any other suitable drive means may be employed.

Reference is again directed to Figure 5 and the needle valve 16. The needle valve is secured to and extends through the gasket 25, which also serves as a diaphragm to isolate the valve cavity 14. Suspended from the bottom cover structure 24 by means of a depending boss 41 is a hollow sealed bellows 42, adapted for movement in a horizontal axis. Joined to the movable end of the bellows 42 is a control shaft 43 which projects into a diaphragm housing.

The diaphragm housing comprises complementary housing members 45 and 46. The housing member 45 may be integral with the bottom cover structure 24 and is in the form of a shallow cylinder coaxial with the control shaft 43 and through which the control shaft extends. The other housing member 46 is fixed to the housing member 45 by means (not shown) and the two housing members clamp the diaphragm 47 to which the control shaft 43 is attached.

The housing member 46 forms a chamber 48 having a port 49 communicating with the air intake manifold of the associated internal combustion engine. The housing member 46 also contains a spring 50 which bears against the diaphragm to urge the control shaft toward the bellows 42. A suitable adjusting screw 51 is provided to vary the force of the spring 50.

Pivotally suspended from the bottom cover structure 24 is a lever 52 having an arm disposed for engagement by a protruding lower end of the needle valve 16. A second arm of the lever 52 is connected by links 53 to a collar 54 secured to the control shaft 43. The operation of the control shaft 43 and associated mechanism will be brought out in more detail hereinafter.

Reference is now directed to Figures 1 and 4. Pivotally mounted for movement in a horizontal plane is an air throttle lever 55 having a disk 56 at one end capable of movement across the upper end of the Venturi tube 7. Secured to the outside of the top cover structure 17 is a solenoid unit 57 which is connected with the throttle lever 55 by a link 58. The solenoid unit is controlled by a thermostat switch 59 and, if desired, by a manual switch 60. The function of the air throttle lever will be brought out in more detail hereinafter.

Each outlet port 26 from the corresponding piston and cylinder unit in the cylinder block 1 communicates with an injection nozzle 61 which may be positioned in the intake manifold A in proximity to a corresponding intake valve B of an internal combustion engine, such as shown diagrammatically in Figure 6.

The construction of the injection nozzles is best shown in Figure 3. Each injection nozzle includes a cylindrical body 62 having a longitudinal bore in which is fitted a liner 63 screw threaded at one end so that the axial position of the liner within the bore of the body may be adjusted. The end of the body corresponding to the screw threaded end of the liner is externally screw threaded for connection to a supply line 64, as shown in Figure 6. The supply line in turn is connected by a conduit (not shown) to a corresponding fitting 29 carried by the bottom cover structure 24.

The liner 63 projects into a cavity 65 formed in the extended end of the body 62. This end of the liner is tapered to form a needle tip 66 and the passage within the liner communicates with lateral ports 67 adjacent the needle tip. The cavity 65 is closed by a diaphragm 68 having a central aperture through which the needle tip 66 projects. The diaphragm is held in place by a cap 69 having a central discharge opening 70. A spring 71 is positioned to bear against the diaphragm 68 so that normally the diaphragm seals against the needle tip. Operation of the injection nozzle will be described hereinafter.

Operation of my injection fuel pump is as follows:

Fuel is supplied to the float chamber 3 through the inlet fitting 19 and needle valve 20. The float is so arranged as to maintain a liquid level within the float chamber approximately coplanar with the radial ports 9 in the venturi tube 7. Fuel from the float chamber is delivered past the outlet control needle valve 16 through the connecting passage 13 and annular passage 12 to the radial ports 9 of the venturi tube. Here the fuel is mixed with air drawn downwardly through the venturi tube and the fuel-air mixture is delivered to each of the piston and cylinder units in succession. It will be observed that as each piston moves upwardly in its travel, a relatively high vacuum is established under the piston which is relieved only by the fuel-air mixture delivered through the slit 6. The air is delivered to the venturi tube through the air intake port 23.

On downward movement of each piston the fuel-air mixture is entrapped and when the pressure has risen sufficiently to open the corresponding outlet valve 27, the mixture is impelled through the conduit (not shown) which terminates in the injection nozzle 61. Before the fuel-air mixture is discharged from the injection nozzle the pressure in the cavity 65 must rise sufficiently to force the diaphragm 69 away from the needle tip. When this occurs the fuel-air mixture is injected in a fine spray into the intake manifold. For purposes of illustration, the point of injection has been shown as adjacent the intake valve. However, the actual point of injection may vary with the type of internal combustion engine and may occur in the intake manifold or in the internal combustion engine cylinder itself.

The amount of fuel supplied to the annular passage 2, and therefore available to the radial ports of the venturi tube, is determined by the needle valve 16. Two forces act on this needle valve to determine its position. One of these forces is proportional to the vacuum existing in the intake manifold in so far as the vacuum

pressure existing therein acts upon the diaphragm **47**. As the vacuum increases the needle valve **16** throttles the supply from the float chamber to the venturi tube ports. The other force acting on the valve **16** is related to the air density which causes the bellows **42** to contract or expand. As the air density decreases the bellows expands and, thus, expands in a direction to decrease the flow from the float chamber to the venturi tube ports. The throttling of the fuel supply decreases the fuel percentage in the fuel-air mixture delivered to the piston and cylinder unit and thence to the corresponding nozzle.

By way of a specific example, consider the device as installed in an automobile traveling on a level road at a speed of 30 M. P. H. Under these conditions the intake manifold may have a vacuum of about 20 in. of mercury which draws the diaphragm **47** to the right as viewed in Figure 5, therefore causing the needle valve or metering pin **16** to move upwardly to restrict flow to the venturi tube ports. As a particular piston rises a vacuum is created under the piston, which is suddenly relieved when the slit **6** is uncovered, causing a transient high velocity flow of air through the venturi tube and by induced suction draws fuel from the passage **12** and ports **9**. The amount of fuel to be thus supplied is determined by the amount of fuel that can pass the restriction provided by the needle or metering valve **16**. Assuming that the throttle position in the engine is not changed but that the load increases, as would be the case if the vehicle were climbing a hill, the vacuum in the manifold is partially relieved, causing the diaphragm **47** to move to the left, allowing the needle or metering valve **16** to open so that a larger quantity of fuel is supplied to compensate for the changed conditions to which the vehicle engine is subjected. As to the speed of the engine, the rate of delivery from the fuel pump is always in proportion to the engine speed due to the fact that the drive mechanism for the pump is mechanically connected to the engine. In the case of a 4-cycle engine, the injection fuel pump speed would be one-half the engine speed. In the case of a 2-cycle engine the fuel pump speed would equal the engine speed.

Reference is again directed to Figure 4: In order to provide an extra rich mixture as required when the engine is cold, the air throttle lever **55** is utilized. When the solenoid unit **57** is energized the venturi tube is throttled a predetermined amount so that the fuel-air mixture contains less air and more fuel so that the fuel-air mixture supplied to the engine cylinders is sufficiently rich to meet the conditions of cold starting. The thermostat switch may be so arranged as to control the solenoid automatically. If desired a manual switch may be employed for the same purpose. It should be observed that while the air throttle lever **55** is indicated as having merely an "off" and an "on" position, its position may be modulated by suitable controls.

It also will be observed that under the cold starting conditions the manifold pressure will be high so that the needle or metering valve **16** will be in a relatively wide-open position, thus facilitating the needed extra supply of fuel.

It should be observed that the injection nozzle does not function until a predetermined pressure has been built up in the conduit which communicates with the corresponding piston and cylinder unit. Thus, the fuel-air mixture under the piston is not delivered through the outlet valve **27** until this pressure is exceeded. The result is that the fuel-air mixture is ejected under appreciable pressure after a predetermined time delay with respect to the operation of the piston and cylinder unit. This high velocity jetting of the fuel-air mixture into the main air stream entering the cylinder from the intake manifold provides an ideally combustible mixture. While the injector is shown as directed into the intake manifold rather than into the internal combustion cylinder itself, it should be observed that a standard injection nozzle,

such as used in diesel engines, may be employed, in which case the fuel-air mixture may be delivered directly into the internal combustion cylinder.

Reference is now directed to Figures 7 and 8. In this construction the essential differences lie in the fact that the piston and cylinder units are separated from the float chamber and associated elements; that is, each piston and cylinder unit is arranged for operation by the valve operating mechanism of an internal combustion engine.

A float housing **72** is provided in which is formed a float chamber **73**. The bottom wall **74** of the float chamber is provided with radiating outlet passages **75**, corresponding to the radial passages **5** of the first described structure. Centered within the float chamber is a venturi tube **7** and surrounding the venturi tube is a sleeve **10** as in the first described structure. The sleeve **10** is fitted in a boss **76**, which communicates with a radial passage **77**. The radial outer extremity of the passage **77** communicates through an inlet port **78** with the float chamber **73**. The inlet port **78** is controlled by a needle or metering valve **79** disposed and guided in a suitable bore provided in the wall of the float housing. The needle valve projects upwardly through a cover **80**. The cover **80** is provided with an upstanding boss **81** and an upstanding laterally directed diaphragm housing member **82**. A complementary housing member **83** corresponding to the housing member **45** coacts with the housing member **82** to clamp a diaphragm **47** as in the first described structure. The diaphragm **47** operates a control shaft **43** which in turn operates the needle or metering valve **79** through a collar **54**, links **53** and lever **52**, all as previously described in connection with the arrangement shown in Figure 5.

Still further, the control shaft is provided with a bellows **42** supported by the boss **81**. The float chamber is provided with a float **22**, and is also provided with an inlet fitting, needle valve and needle valve shutoff lever in the manner of the first described structure. These elements, however, are omitted in Figure 7 to simplify the illustration. Still further, the air throttle lever **55** and associated mechanism may be provided although also omitted from Figure 7 to simplify the illustration.

Associated with each cylinder of the internal combustion engine is a fuel pump unit **84** comprising a cylinder **85** having a liner **86** and adapted to receive a piston **87**. The piston in its extreme intake stroke uncovers a slit **88** provided in the wall of the liner **86** and similarly communicating through a fitting and conduit with a corresponding radial outlet passage **75**. A fuel-air mixture is discharged from the fuel pump unit **84** through a discharge port **89** controlled by a check valve **90** similar to the check valve or outlet valve **27** of the first described structure.

The fuel-air mixture is delivered from each fuel pump unit **84** through a suitable conduit to an injection nozzle **61** shown as located in this instance in a wall of an intake manifold C communicating with a cylinder D. The cylinder D is indicated in Figure 8 as being provided with an overhead valve E. The valve E is provided with a stem F connected to suitable operating mechanism G. The valve operating mechanism is connected to the piston **87** of a corresponding fuel pump unit **84**.

Operation of this arrangement shown in Figures 6 and 7 is essentially the same as in the first described structure; that is, with each operation of the fuel pump unit, fuel-air mixture is drawn from the venturi tube **7** and delivered to the injection nozzle **61**. The needle or metering valve **79** functions in the same manner as the needle valve **16**. It should be observed that while the piston and cylinder unit is shown as connected to the intake valve of the cylinder supplied by the corresponding injection nozzle **61**, due to the time delay inherent in delivery of the fuel-air mixture, it is feasible to operate the corresponding fuel pump unit from the cam operating mechanism of the exhaust valve of a corresponding cylin-

der or, in fact, from any other valve operating mechanism of the internal combustion mechanism the timing of which is in the desired relation of the movement of the intake valve to be supplied.

It will be observed that in each structure shown, because the venturi tube is centered in the float chamber, the float chamber may be tilted to a substantial angle without appreciably altering the fuel level relative to the throat of the venturi tube.

Having fully described my invention, it is to be understood that I do not wish to be limited to the details herein set forth, but my invention is of the full scope of the appended claims.

I claim:

1. An injection fuel pump for internal combustion engines, comprising: a piston and cylinder unit for each cylinder of an internal combustion engine; means for operating said units in timed relation to said internal combustion engine; means defining a fuel chamber; means for maintaining fuel at a substantially predetermined level in said fuel chamber; an upstanding venturi tube in said fuel chamber having an air intake and projecting above the fuel level thereof and communicating with said units, said venturi having a throat and fuel inlet ports at approximately said fuel level whereby said venturi tube supplies a fuel-air mixture to said units; means defining a flow passage between said fuel chamber and said venturi fuel inlet ports; a metering valve controlling flow in said passage; means responsive to pressure conditions in the intake manifold of said internal combustion engine for operating said metering valve to reduce flow in said passage as the pressure in said intake manifold decreases; conduits connecting said units with corresponding cylinders of said internal combustion engine; and nozzles at the discharge ends of said conduits.

2. An injection fuel pump for internal combustion engines: a liquid fuel chamber; means for maintaining a substantially predetermined fuel level therein; a venturi tube upstanding in said float chamber and having a lower discharge end and an upper air intake end above the fuel level in said float chamber, said venturi tube having a throat and fuel inlet ports at approximately the fuel level in said float chamber; means defining a flow passage between said fuel chamber and said venturi fuel inlet ports; a metering valve controlling flow in said passage; means sensitive to pressure at the intake manifold of an internal combustion engine for operating said metering valve to cause flow in said flow passage in proportion to said intake manifold pressure; and a pump unit having an intake communicating with the discharge end of said venturi tube and a discharge adapted for communication with a cylinder of said internal combustion engine.

3. An injection fuel pump for internal combustion engines, comprising: a piston and cylinder unit for each cylinder of an internal combustion engine; means for operating said units in timed relation to said internal combustion engine; means defining a fuel chamber; means for maintaining fuel at a substantially predetermined level in said fuel chamber; an upstanding venturi tube in said fuel chamber having an air intake end projecting above the fuel level thereof and communicating with said units, said venturi having a throat and fuel inlet ports at approximately said fuel level whereby said venturi tube supplies a fuel-air mixture to said units; means defining a flow passage between said fuel chamber and said venturi fuel inlet ports; a metering valve in said flow passage; a pressure sensitive means controlling said metering valve, said means including a device sensitive to ambient atmospheric pressures, and a device sensitive to intake manifold pressures of an internal combustion engine; conduits connecting said units with corresponding cylinders of said internal combustion engine; and nozzles at the discharge ends of said conduits.

4. An injection fuel pump for internal combustion engines: a liquid fuel chamber; means for maintaining a substantially predetermined fuel level therein; a venturi tube upstanding in said float chamber and having a lower discharge end and an upper air intake end above the fuel level in said float chamber, said venturi tube having a throat and fuel inlet ports at approximately the fuel level in said float chamber; means defining a flow passage between said fuel chamber and said venturi fuel inlet ports; a metering valve in said flow passage; a pressure sensitive means controlling said metering valve, said means including a device sensitive to ambient atmospheric pressures, and a device sensitive to intake manifold pressures of an internal combustion engine; and a pump unit having an intake communicating with the discharge end of said venturi tube and a discharge adapted for communication with a cylinder of an internal combustion engine.

5. An injection fuel pump for internal combustion engines, comprising: a pump operable in timed relation to an internal combustion engine to discharge a fuel-air mixture to a cylinder thereof; a fuel chamber; a venturi tube having an air intake end, fuel supply ports, and a fuel-air discharge end, the latter communicating with said pump; means defining a fuel passage between said fuel chamber and fuel supply ports; a metering valve for regulating flow of fuel in said fuel passage to vary the fuel percentage of said mixture; a first device sensitive to ambient atmospheric pressures; and a second device sensitive to pressures in the intake manifold of said internal combustion engine, said devices cooperating to cause said valve to regulate flow in said fuel passage in proportion to atmospheric pressure and intake manifold pressures.

6. An injection fuel pump for internal combustion engines: a liquid fuel chamber; means for maintaining a substantially predetermined fuel level therein; a venturi tube upstanding in said float chamber and having a lower discharge end and an upper air intake end above the fuel level in said float chamber, said venturi tube having a throat and fuel inlet ports at approximately the fuel level in said float chamber; means for throttling the air supply to said venturi tube; means defining a flow passage between said fuel chamber and said venturi fuel inlet ports; a metering valve in said flow passage; a pressure sensitive means controlling said metering valve, said means including a device sensitive to ambient atmospheric pressures, and a device sensitive to intake manifold pressures of an internal combustion engine; and a pump unit having an intake communicating with the discharge end of said venturi tube and a discharge adapted for communication with a cylinder of an internal combustion engine.

7. An injection fuel pump for internal combustion engines, comprising: a pump operable in timed relation to an internal combustion engine to discharge a fuel-air mixture to a cylinder thereof; a fuel chamber; a venturi tube having an air intake end, fuel supply ports, and a fuel-air discharge end, the latter communicating with said pump; means for throttling the air supply to said venturi tube; means defining a fuel passage between said fuel chamber and fuel supply ports; a metering valve for regulating flow of fuel in said fuel passage to vary the fuel percentage of said mixture; a first device sensitive to ambient atmospheric pressures; and a second device sensitive to pressures in the intake manifold of said internal combustion engine, said devices cooperating to cause said valve to regulate flow in said fuel passage in proportion to atmospheric pressure and intake manifold pressures.

8. An injection fuel pump for internal combustion engines as set forth in claim 3 wherein: said piston and cylinder units are grouped in an annular ring which forms the walls of said fuel chamber; and common drive means for the pistons of said piston and cylinder units disposed axially of said fuel chamber.

9. An injection fuel pump for internal combustion engines as set forth in claim 3 wherein: each piston and cylinder unit is disposed adjacent its corresponding cylinder of said internal combustion engine, and individual

means is provided for connecting the piston of each piston and cylinder unit with the valve operating mechanism of said internal combustion engine.

References Cited in the file of this patent

UNITED STATES PATENTS

1,894,510	Ensign	Jan. 17, 1933
1,917,690	Beeh	July 11, 1933
2,373,353	Smith	Apr. 10, 1945
2,381,585	Gambrell	Aug. 7, 1945
2,385,784	Baker	Oct. 2, 1945
2,440,566	Armstrong	Apr. 27, 1948
2,503,534	Wilks	Apr. 11, 1950