Jan. 27, 1970 W. J. NYBERG 3,491,984

MODULAR RAILING ASSEMBLY

Filed Oct. 28, 1968 3 Sheets-Sheet 1

fig.1.

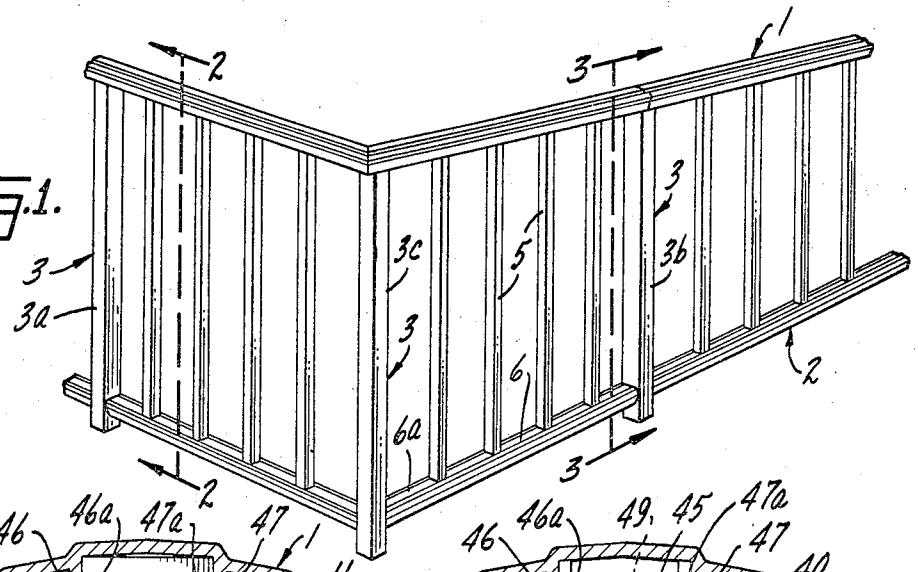

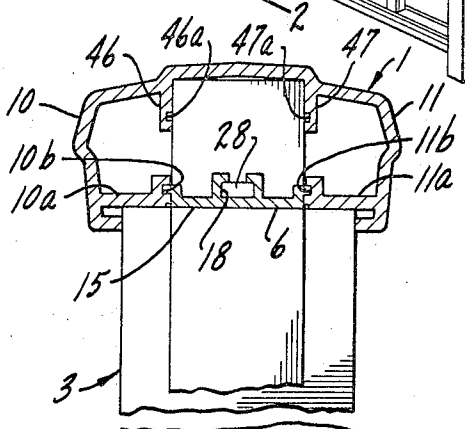

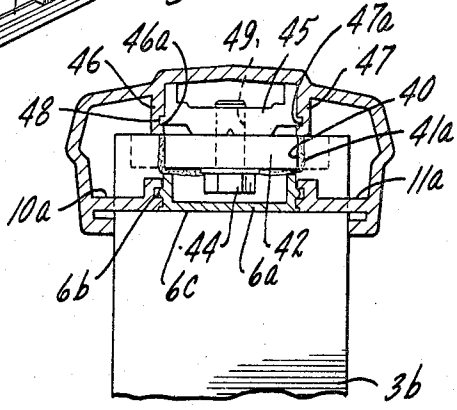

fig.2.

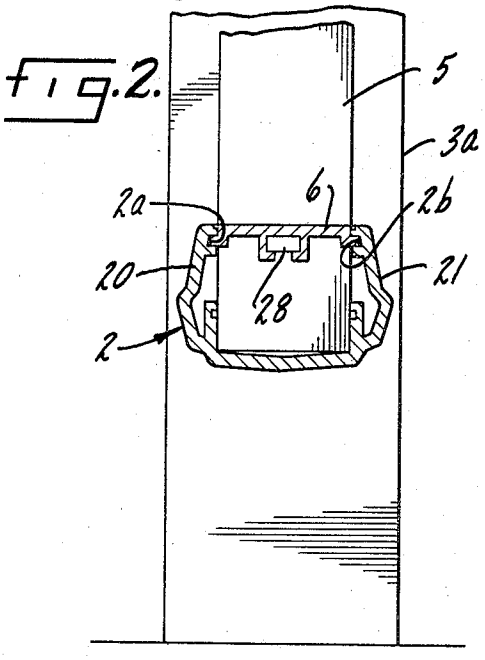

fig.3.

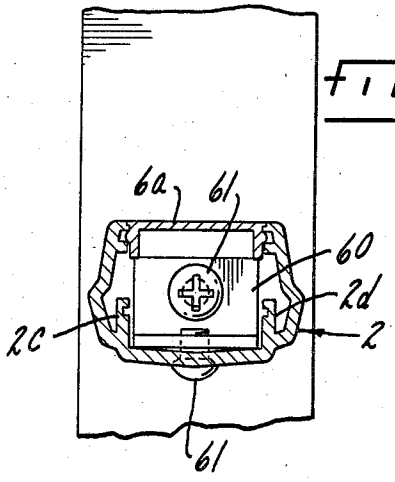

INVENTOR.
Wendall J. Nyberg,
BY Parker, Carter & Markey
Attorneys.

Jan. 27, 1970 W. J. NYBERG 3,491,984

MODULAR RAILING ASSEMBLY

Filed Oct. 28, 1968 3 Sheets-Sheet 2

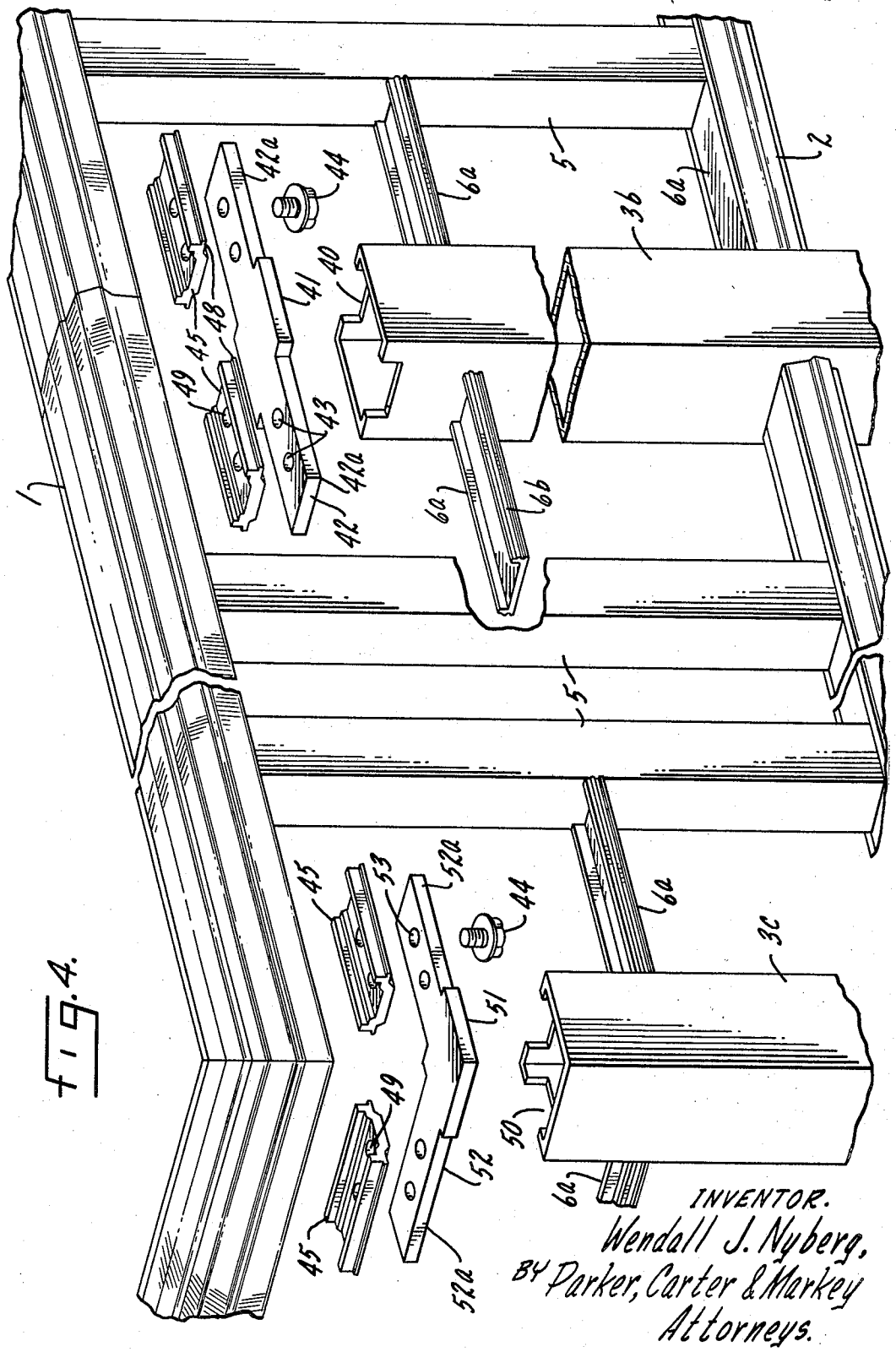

FIG. 4.

INVENTOR.
Wendall J. Nyberg,
BY Parker, Carter & Markey
Attorneys.

Jan. 27, 1970 W. J. NYBERG 3,491,984

MODULAR RAILING ASSEMBLY

Filed Oct. 28, 1968 3 Sheets-Sheet 5

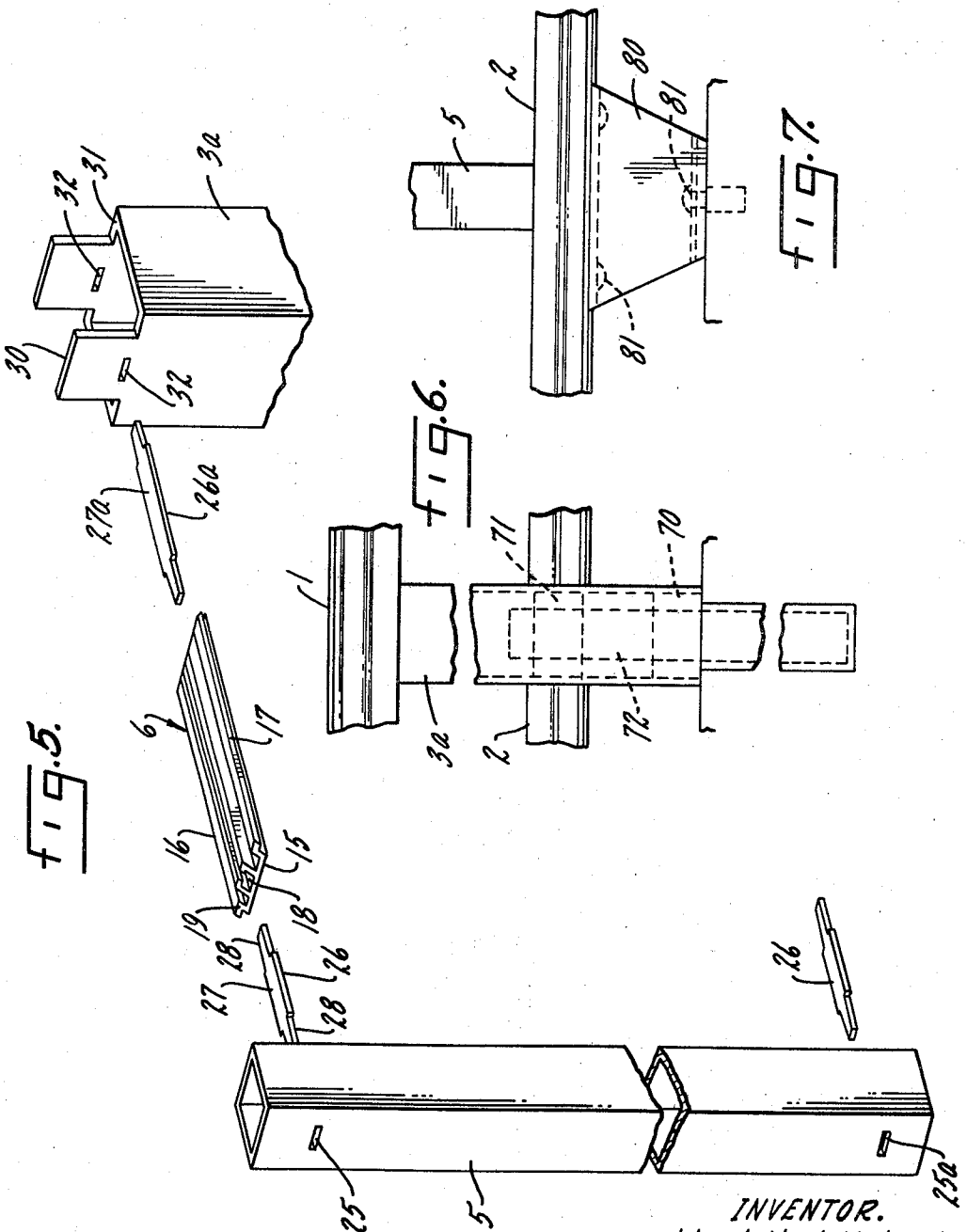

United States Patent Office 3,491,984 Patented Jan. 27, 1970

3,491,984

MODULAR RAILING ASSEMBLY

Wendall J. Nyberg, Kalamazoo, Mich., assignor to North American Aluminum Corporation, Kalamazoo, Mich., a corporation of Delaware

Filed Oct. 28, 1968, Ser. No. 770,949
Int. Cl. E04h 17/16; E04c 1/24
U.S. Cl. 256—21 1 Claim

ABSTRACT OF THE DISCLOSURE

A modular railing structure formed of prefabricated top and bottom railings, spindles, support posts, cover plates, adapter plates and locking elements all assemblable to form a rigid railing structure with concealed fasteners and by unskilled labor using simple tools.

SUMMARY OF THE INVENTION

Prefabricated upper and lower railings are formed of channels having opposed grooves in the walls thereof. Support posts and pickets may be formed of the same or differing widths, the pickets having their opposite ends received in the opposed channels of the top and bottom railings, the support posts having their upper ends received in the channel of the top railing. Cover plates are snapped into and slidable in said grooves. Some of said plates are locked to pickets and posts by keys extending from slots in the pickets and posts. Juncture points of the top railing are secured to the support posts by means of special brackets secured to and extending from the support posts and fastened to adapter plates within the top railing, the fasteners being covered by cover plates snapped into said grooves. Bottom railing ends are secured by brackets to support posts. Support posts are anchored from within to the base upon which the railing structure rests.

This invention relates to railing structures and has as one purpose the provision of a modular railing structure having pre-fabricated elements capable of assembly and erection by unskilled labor and without the need for special tools.

Another purpose of the invention is to provide a railing structure formed of prefabricated interchangeable parts capable of rapid assembly and resulting in a railing having elements of assured position and parallelism.

Another purpose is to provide a railing structure of attractive appearance and secured by concealed fasteners.

Another purpose is to provide a railing structure formed of basic components capable of assembly into rails of varying lengths.

Another purpose is to provide a modular railing structure capable of assembly at the job-site by use of locking elements effective to lock said structure securely without welds and with a minimum use of fasteners.

Another purpose is to provide a railing structure formed entirely of extruded parts.

Another purpose is to provide a modular railing structure having concealed interlocking elements effective to secure said railing structure in a rigidly locked assembly.

Another purpose is to provide a railing structure formed of a minimum number of parts.

Other purposes may appear from time to time during the course of the specification and claims.

BRIEF DESCRIPTION OF THE DRAWINGS

The invention is illustrated more or less diagrammatically in the accompanying drawings wherein:

FIGURE 1 is a perspective view of a modular railing;

FIGURE 2 is a detail sectional view taken on the line 2—2 of FIGURE 1;

FIGURE 3 is a detail sectional view taken on the line 3—3 of FIGURE 1;

FIGURE 4 is an exploded detail view;

FIGURE 5 is an exploded detail view;

FIGURE 6 is a detail view; and

FIGURE 7 is a detail view of a modification.

Like parts are indicated by like numerals throughout the specification and drawings.

DESCRIPTION OF THE PREFERRED EMBODIMENT

Referring now to the drawings, and particularly to FIGURE 1, a railing structure of the invention is illustrated in assembled configuration.

The railing structure of FIGURE 1 includes parallel top and bottom rails indicated generally by the numerals **1** and **2**, respectively. Rails **1** and **2** are channel-like in cross section and have their channels open toward each other. Spaced support posts **3** have their upper ends received within the rail **1** and their lower ends extending downwardly beyond bottom rail **2**. Between support posts **3** a plurality of individual spindles **5** extend between rails **1** and **2** and have their opposite ends received within said rails. Between each adjacent pair of spindles **5** the rails **1**, **2** carry cover plates such as that shown at **6** in FIGURE 1.

As may be best seen in FIGURE 2, the rail **1** is formed of a downwardly open channel having side walls **10**, **11**. The walls **10**, **11** have spaced depending portions from which inwardly directed, elongated flange portions **10***a*, **11***a* extend. The spaced, opposed skirt portions of side walls **10**, **11** snugly receive therebetween the upper ends of support posts **3**. The flanges **10***a*, **11***a* carry elongated, spaced, opposed, parallel grooves **10***b*, **11***b* which are coextensive with flanges **10***a*, **11***a*.

The cover plates **6** comprise elongated, generally rectilinear plates having smooth outer surfaces **15** and offset, coextensive, longitudinal side ridges or tongues **16**, **17** formed for slidable reception within the grooves **10***b*, **11***b*, respectively. A key-receiving pocket or locking configuration **18** is formed at the center line of each plate **6** and is open at the opposite ends of plate **6** for reception of a locking key described hereinbelow.

As may be best seen in FIGURE 5, the opposite end portions of plate **6** are chamfered or rearwardly cut back from the outer surface **15**, as indicated generally at **19**.

Each of the pickets **5** is generally rectilinear in cross-sectional configuration and, as in the case of rails **1**, **2** and posts **3**, as well as plates **6** and the other elements described herein, the pickets **5** are conveniently formed of hollow aluminum extrusions. The opposite ends of pickets **5** are formed and adapted for snug reception within the opposed open channels of rails **1** and **2** and for engagement with the inner surfaces of the cross wall portions thereof, the pickets **5** being of sufficient width to bridge entirely across the space between the inner grooved ends of flanges **10***a*, **11***a* of rail **1** and between the side walls **20**, **21** of bottom rail **2**.

Formed in the cross wall portions of each picket **5**, which extend between the side walls of top and bottom railings **1** and **2**, are slots **25**. A locking key **26** is of sufficient thickness and width to pass through the slots **25** in the side walls of a picket, the key **26** having a generally rectilinear central portion **27** formed and adapted to extend across the picket **5** and to have its opposite edges just filling the slots **25**. The key **26** includes tapered opposite end portions **28** which extend in opposite directions from the picket **5** when the key **26** is positioned within the slot **25**. The tapered locking ends **28** of key **26** are formed and adapted for snug, gripping or locking reception within the locking configurations **18** at the opposite ends of each cover plate **6**.

Support posts 3*a*, as best seen in FIGURES 1 and 5, are provided for positioning at points intermediate the ends of a continuous length of upper rail **1**. The support posts 3*a* have upstanding, centrally positioned extensions **30** formed on their cross wall portions. The extensions **30** are of a width corresponding to that of pickets **5** and hence their opposite longitudinal edges are in contact with opposed inner edges of flanges **10***a*, **11***a* of upper rail **1**. The upper edge **31** of post 3*a* receives the flanges **10***a*, **11***a*, as shown in FIGURE 2 for example. Slots **32** are formed at the base of extensions **30** for positioning therein of a lock member **26***a*, the lock member **26***a* corresponding substantially to lock member **26** with the exception of its longer central portion **27***a* formed and adapted for extension between and for positioning of its opposite end portions within slots **32**.

Support posts 3*b* are provided for positioning at points of juncture between aligned portions of rail **1** arranged in a continuing straight line. Posts 3*b* have the upper edges of their cross wall portions recessed as indicated at **40** for reception of an enlarged central portion **41** of a bracket **42**. Portion **41**, as shown at **41***a*, is secured as by welding within recess **40** at the factory. Bracket **42** has oppositely extending arm portions **42***a* arranged for extension along the line of rails **1** and **2** and beyond the cross wall portions of posts 3*b*. Arms **42***a* carry apertures **43** therein for passage therethrough of fasteners **44**.

Adapter plates **45** are formed and configured for reception within the inner or subchannel formed by the cross-wall of rail **1** and parallel, spaced subwalls **46**, **47**. Plates **45** carry longitudinal side ridges or tongues **48** for sliding reception within opposed grooves **46***a*, **47***a* in walls **46**, **47**. Adapter plates **45** themselves are generally channeled in cross-sectional configuration and carry threaded apertures **49** for reception of fasteners **44**. Adapater plates are prevented from sliding movement away from desired positioned by staking to the subwalls **46**, **47**. It will be understood, as shown in FIGURE 3, that flanges **10***a*, **11***a* are cut away adjacent juxtaposed ends of rails **1** for passage of posts 3*b*.

Cover plates **6***a* are generally of channel form in cross-sectional configuration and carry oppositely disposed, longitudinal, coextensive ridges or tongues **6***b* for snapping into the grooves **10***b*, **11***b* of rail **1**. The cover plates **6***a* are of sufficient depth to cause their outer smooth cross wall surfaces **6***c* to lie flush with the outer surfaces of flanges **10***a*, **11***a* of channel **1**, as do the surfaces **15** of plates **6**, while the cover plate **6***a* nonetheless serve to mask the fasteners **44**.

Support posts 3*c* are provided for positioning at juncture points between angularly disposed mating portions of rail **1**, such as at the corners of a railing structure formed and assembled in accordance with the invention.

Posts 3*c* have their inner, angularly disposed wall portions recessed as indicated at **50** for reception and attachment, as by welding, of an enlarged central portion **51** of angle bracket **52**. Bracket **52** has arms **52***a* extending from recesses **50** and arms **52***a* are apertured as at **53** for reception of fasteners **44**. Adapter plates **45** and cover plates **6***a* are provided for employment with bracket **52** as in the manner described above with relation to brackets **42** and posts 3*c* extend between walls **10**, **11** in the manner of posts 3*b*.

Bottom rail **2** extends in segments between support posts 3*a*, 3*b*, 3*c*. Since rail **2** receives only the pickets **5**, it may, when desired, be of less width in cross-sectional dimension. In this regard it will be understood that a railing structure may be formed entirely of support posts and pickets having the cross-sectional dimensions of pickets **5**. In such event the rail **1** may be formed substantially identically with rail **2**.

Rail **2** has opposed longitudinal spaced grooves **2***a*, **2***b* for reception of the longitudinal side edges of cover plates **6**. Slots **25***a* are formed for reception of key segment **27** in the manner described above.

L-shaped brackets **60** are provided, a fastener **61** attaching one leg of bracket **60** to a support post, as for example the post 3*b* as shown in FIGURE 1. A second fastener **62** is provided for extension upwardly through an opening formed in the bottom cross wall of rail **2** to engage the other leg portion of the bracket **60**. The horizontal leg of bracket **60** rides within rail **2** and between the subchannel formed by upstanding spaced walls **2***c*, **2***d* which also receive the lower ends of pickets **5**.

One form of anchor for the railing structure of the invention is illustrated in FIGURE 6 wherein a pair of spaced nut elements **70**, **71** are positioned within a support post, such as the post 3*a*. A threaded rod **72** has its lower end suitably embedded in the floor or supporting surface for the railing structure. The upper end of rod **72** is secured to the nuts **70**, **71**. It will be observed that the nut **71** aligns with the spaced opposed ends of lower rail portions **2**. Hence the fastener **61** may serve the dual purpose of securing bracket **60** externally to post 3*a* and of securing nut **71** within post 3*a*.

In FIGURE 7 an anchor is illustrated for use with a railing structure formed entirely of rails having the dimensions of rail **2** and support posts and pickets having the dimensions of pickets **5**. The bracket **80** is generally rectilinear and hollow in cross-sectional configuration. It will be observed that the anchor **80** is generally frusto-conical in side elevation, having a lower horizontal portion of lesser extension than its upper horizontal portion. Hence the fasteners **81** for the anchors **80** will be substantially concealed and will yet have their head portions available for reception of a suitable tool.

The embodiments of the invention in which an exclusive property or privilege is claimed are defined as follows:

1. A railing structure including spaced upper and lower channel-shaped rails open toward each other, a plurality of spaced pickets having their opposite ends received in said rails, aligned slots in the opposite walls of each of said pickets, a key carried in the slots of each picket and having end portions extending in opposite directions from its associated picket and within one of said rails and a plurality of cover plates slidably received in said rails between each pair of adjacent pickets, each of said cover plates having locking configurations engaging said key end portions, support posts beneath adjacent abutting ends of said upper rails, a bracket secured to the upper end of said support posts and positioned within said upper rail abutting ends, an adapter plate carried within each of said upper rails, means fastening said bracket to said adapter plates and additional cover plates, said additional cover plates being snapped into engagement with said upper rails and covering said brackets, adapter plates and fasteners.

References Cited

UNITED STATES PATENTS

1,376,150	4/1921	Miller.	
2,771,276	11/1956	Constance, et al.	256—22
2,808,233	10/1957	Spescha	256—22
3,033,532	5/1962	McFall.	
3,313,527	4/1967	Eriksson	256—21 X

FOREIGN PATENTS

570,548	9/1958	Belgium.

DENNIS L. TAYLOR, Primary Examiner

U.S. Cl. X.R.

256—65