US007392310B2

(12) **United States Patent**
Motoyama et al.

(10) **Patent No.: US 7,392,310 B2**
(45) **Date of Patent: Jun. 24, 2008**

(54) **METHOD AND SYSTEM FOR USING DATA STRUCTURES TO STORE DATABASE INFORMATION FOR MULTIPLE VENDORS AND MODEL SUPPORT FOR REMOTELY MONITORED DEVICES**

(75) Inventors: **Tetsuro Motoyama**, Cupertino, CA (US); **Avery Fong**, Castro Valley, CA (US)

(73) Assignee: **Ricoh Company, Ltd.**, Tokyo (JP)

(*) Notice: Subject to any disclaimer, the term of this patent is extended or adjusted under 35 U.S.C. 154(b) by 712 days.

(21) Appl. No.: **10/328,008**

(22) Filed: **Dec. 26, 2002**

(65) **Prior Publication Data**

US 2004/0139183 A1 Jul. 15, 2004

(51) **Int. Cl.**
G06F 15/173 (2006.01)
G06F 15/16 (2006.01)
G06F 7/00 (2006.01)

(52) **U.S. Cl.** **709/224**; 709/217; 709/207; 707/102; 707/6

(58) **Field of Classification Search** 709/224, 709/223, 228, 207; 707/102, 1, 6
See application file for complete search history.

(56) **References Cited**

U.S. PATENT DOCUMENTS

5,805,442 A * 9/1998 Crater et al. 709/220
6,112,246 A * 8/2000 Horbal et al. 709/230
6,122,639 A * 9/2000 Babu et al. ..... 707/103 R
6,317,848 B1 11/2001 Sorens et al.
6,430,711 B1 8/2002 Sekizawa
6,477,589 B1 * 11/2002 Suzuki et al. 710/18
6,480,901 B1 * 11/2002 Weber et al. 709/246
6,631,407 B1 * 10/2003 Mukaiyama et al. 709/223
6,658,586 B1 * 12/2003 Levi 714/4
6,826,553 B1 * 11/2004 DaCosta et al. 707/1
6,889,264 B2 5/2005 Clough et al.
6,910,076 B2 * 6/2005 Lortz 709/229
7,053,767 B2 5/2006 Petite et al.
7,072,987 B2 * 7/2006 Jurisch et al. 709/249
7,194,538 B1 * 3/2007 Rabe et al. 709/224
2002/0083228 A1 * 6/2002 Chiloyan et al. 710/9

(Continued)

OTHER PUBLICATIONS

U.S. Appl. No. 11/234,319, filed Sep. 26, 2005, Motoyama et al.

(Continued)

Primary Examiner—Krisna Lim
Assistant Examiner—Kevin Bates
(74) *Attorney, Agent, or Firm*—Oblon, Spivak, McClelland, Maier & Neustadt, P.C.

(57) **ABSTRACT**

In a communication system having one or more monitored devices communicatively coupled to a monitoring system, a database having information related to the one or more monitored devices, a method of obtaining and maintaining, in the monitoring system, information related to the monitored devices is described. The method includes enabling the monitoring system to access the database in order to retrieve information related to the monitored devices, populating a first data structure with information retrieved from the database, determining if a monitored device is supported by the monitoring system using information from the database, and establishing communication with the monitored device in order to obtain status information of the monitored device if the monitored device is determined to be supported by the monitoring system.

19 Claims, 38 Drawing Sheets

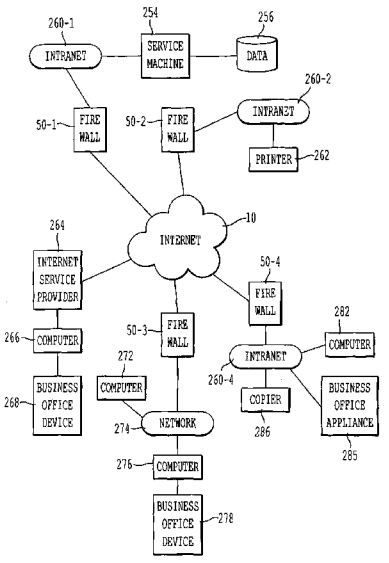

U.S. PATENT DOCUMENTS

2003/0023333	A1*	1/2003	Birkle	709/201
2004/0139183	A1	7/2004	Motoyama et al.	

OTHER PUBLICATIONS

U.S. Appl. No. 11/234,322, filed Sep. 26, 2005, Motoyama et al.
U.S. Appl. No. 11/234,224, filed Sep. 26, 2005, Motoyama et al.
U.S. Appl. No. 11/234,323, filed Sep. 26, 2005, Motoyama et al.
U.S. Appl. No. 11/153,543, filed Jun. 16, 2005, Motoyama et al.
U.S. Appl. No. 11/455,663, filed Jun. 20, 2006, Motoyama.
U.S. Appl. No. 11/867,741, filed Oct. 5, 2007, Motoyama et al.
U.S. Appl. No. 11/517,363, filed Sep. 8, 2006, Motoyama et al.
U.S. Appl. No. 11/517,430, filed Sep. 8, 2006, Motoyama et al.
U.S. Appl. No. 11/517,362, filed Sep. 8, 2006, Motoyama et al.
U.S. Appl. No. 11/517,378, filed Sep. 8, 2006, Motoyama et al.
U.S. Appl. No. 11/517,428, filed Sep. 8, 2006, Motoyama et al.
U.S. Appl. No. 11/032,039, filed Jan. 11, 2005, Motoyama et al.
U.S. Appl. No. 11/032,192, filed Jan. 11, 2005, Motoyama et al.
U.S. Appl. No. 11/032,016, filed Jan. 11, 2005, Motoyama et al.
U.S. Appl. No. 11/032,063, filed Jan. 11, 2005, Motoyama et al.
U.S. Appl. No. 11/032,088, filed Jan. 11, 2005, Motoyama et al.
U.S. Appl. No. 10/328,008, filed Dec. 26, 2002, Motoyama et al.
U.S. Appl. No. 10/372,939, filed Feb. 26, 2003, Motoyama.
U.S. Appl. No. 09/756,120, filed Jan. 9, 2001, Motoyama et al.
U.S. Appl. No. 09/953,358, filed Sep. 17, 2001, Motoyama et al.
U.S. Appl. No. 09/953,359, filed Sep. 17, 2001, Motoyama et al.
U.S. Appl. No. 09/975,935, filed Oct. 15, 2001, Motoyama et al.
U.S. Appl. No. 09/921,707, filed Aug. 6, 2001, Motoyama.
U.S. Appl. No. 10/068,861, filed Feb. 11, 2002, Motoyama et al.
U.S. Appl. No. 10/142,989, filed May 13, 2002, Motoyama et al.
U.S. Appl. No. 10/162,402, filed Jun. 5, 2002, Motoyama.
U.S. Appl. No. 10/157,903, filed May 31, 2002, Motoyama et al.
U.S. Appl. No. 10/157,905, filed May 31, 2002, Motoyama et al.
U.S. Appl. No. 10/225,290, filed Aug. 22, 2002, Motoyama.
U.S. Appl. No. 10/328,026, filed Dec. 26, 2002, Motoyama et al.
U.S. Appl. No. 10/328,003, filed Dec. 26, 2002, Motoyama et al.
U.S. Appl. No. 10/764,582, filed Jan. 27, 2004, Motoyama et al.
U.S. Appl. No. 10/764,467, filed Jan. 27, 2004, Motoyama et al.
U.S. Appl. No. 10/764,569, filed Jan. 27, 2004, Motoyama et al.
U.S. Appl. No. 10/764,527, filed Jan. 27, 2004, Motoyama et al.
U.S. Appl. No. 10/670,505, filed Sep. 26, 2003, Motoyama.
U.S. Appl. No. 10/670,604, filed Sep. 26, 2003, Motoyama.
U.S. Appl. No. 10/460,408, filed Jun. 13, 2003, Motoyama et al.
U.S. Appl. No. 10/460,150, filed Jun. 13, 2003, Motoyama et al.
U.S. Appl. No. 10/460,404, filed Jun. 13, 2003, Motoyama et al.
U.S. Appl. No. 10/460,151, filed Jun. 13, 2003, Motoyama et al.

* cited by examiner

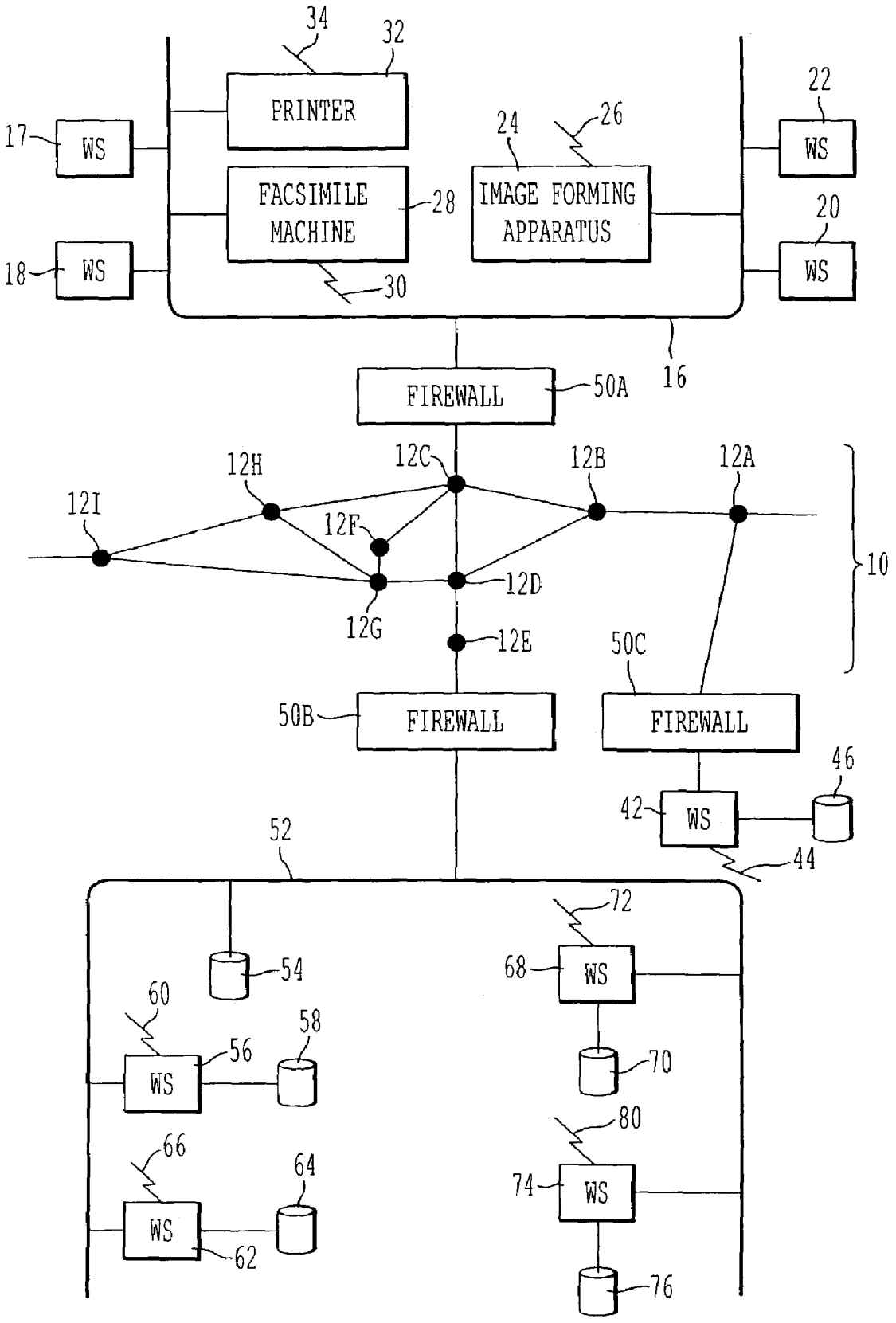
34
32
PRINTER
17
WS
22
WS
24
26
FACSIMILE MACHINE
28
IMAGE FORMING APPARATUS
18
WS
30
20
WS
16
FIREWALL
50A
12H
12C
12B
12A
12I
12F
10
12D
12G
12E
50C
50B
FIREWALL
FIREWALL
46
42
WS
52
44
72
54
68
WS
60
58
56
WS
70
80
66
64
74
WS
WS
62
76

FIG. 1

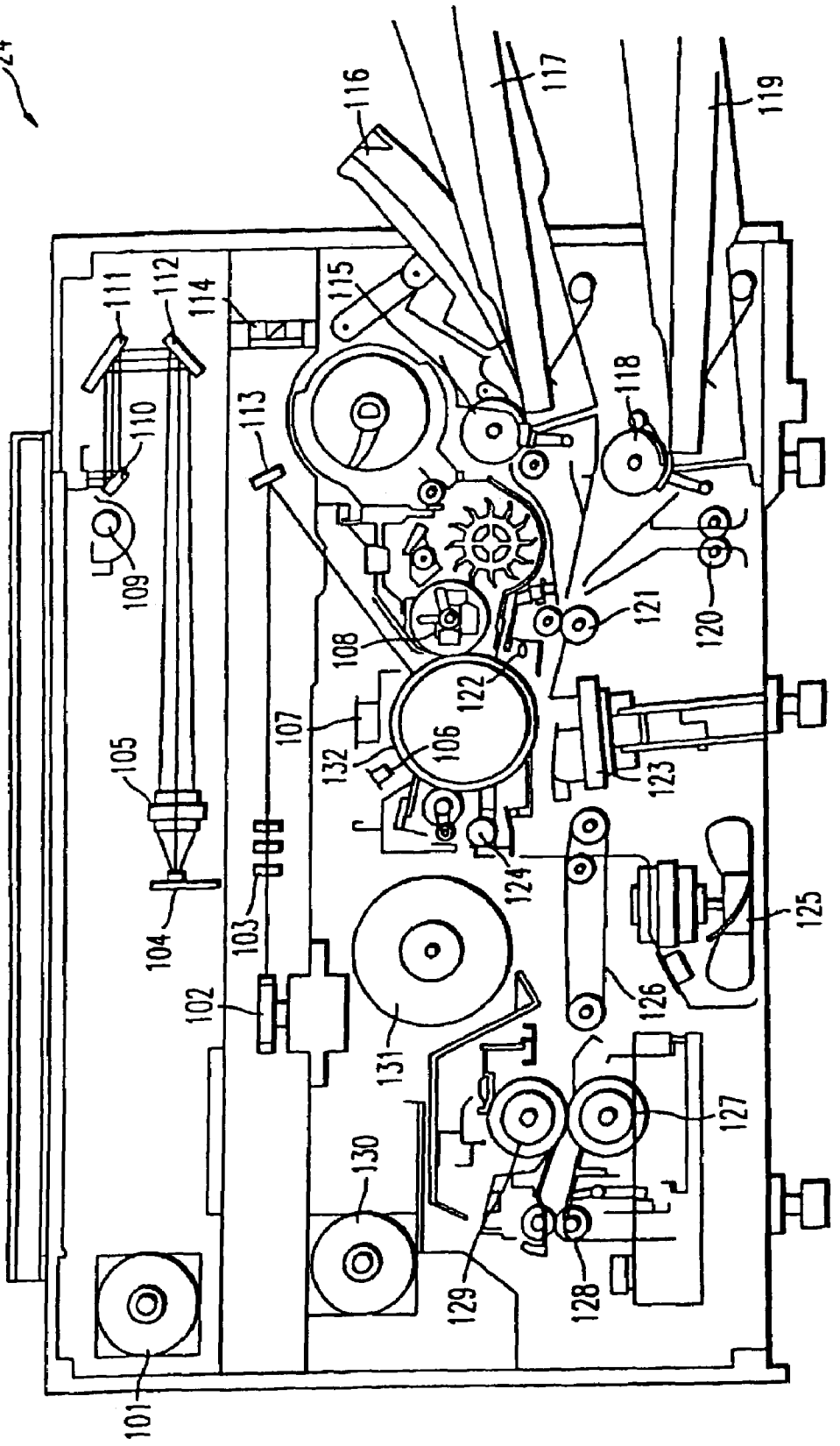
24
101
102
103
104
105
106
107
108
109
110
111
112
113
114
115
116
117
118
119
120
121
122
123
124
125
126
127
128
129
130
131
132

FIG. 2

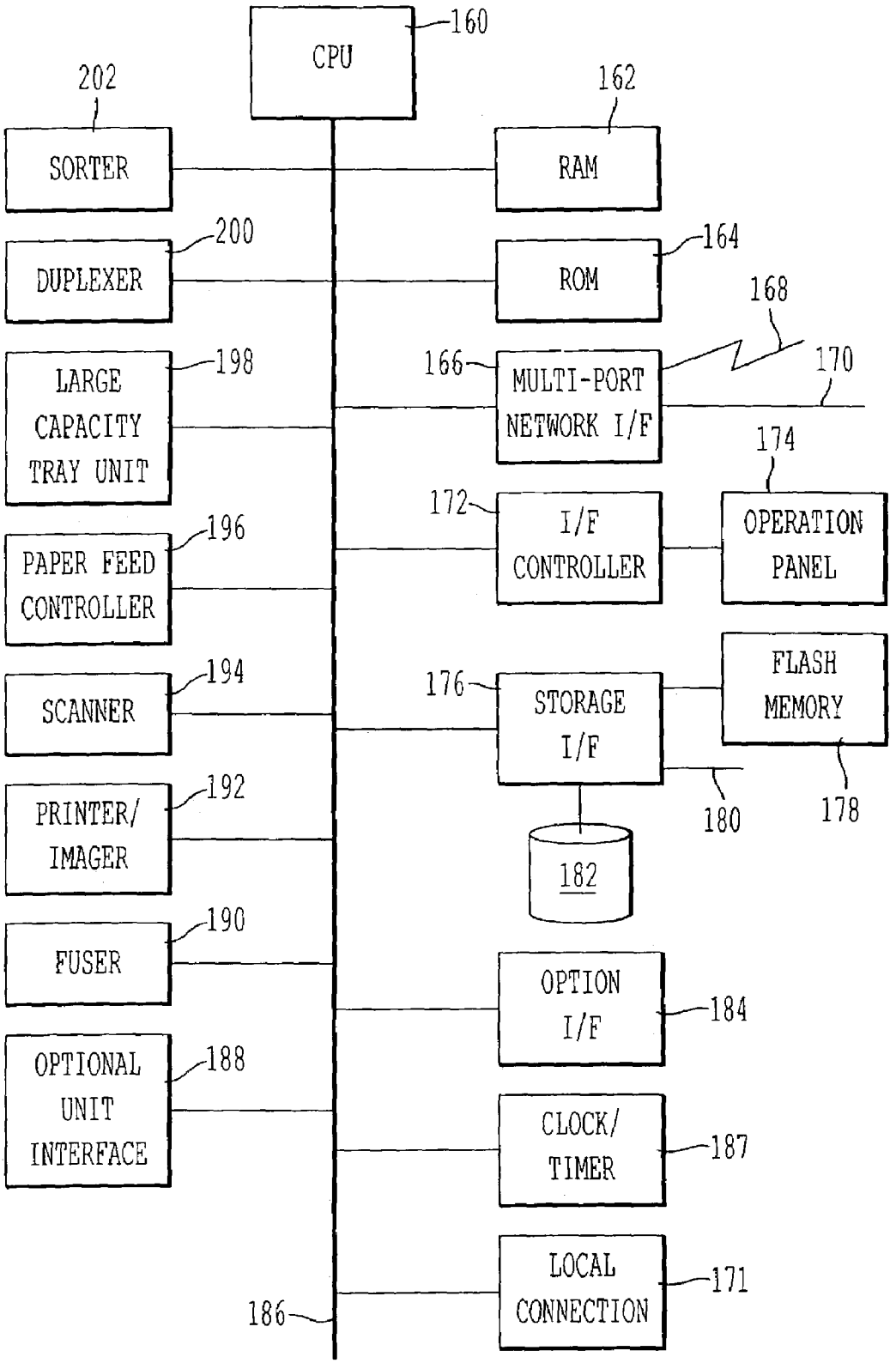
CPU
160
202
162
SORTER
RAM
200
DUPLEXER
ROM
164
168
LARGE CAPACITY TRAY UNIT
198
166
MULTI-PORT NETWORK I/F
170
174
172
I/F CONTROLLER
OPERATION PANEL
PAPER FEED CONTROLLER
196
FLASH MEMORY
SCANNER
194
176
STORAGE I/F
PRINTER/ IMAGER
192
180
178
182
FUSER
190
OPTION I/F
184
OPTIONAL UNIT INTERFACE
188
CLOCK/ TIMER
187
LOCAL CONNECTION
171
186

FIG. 3

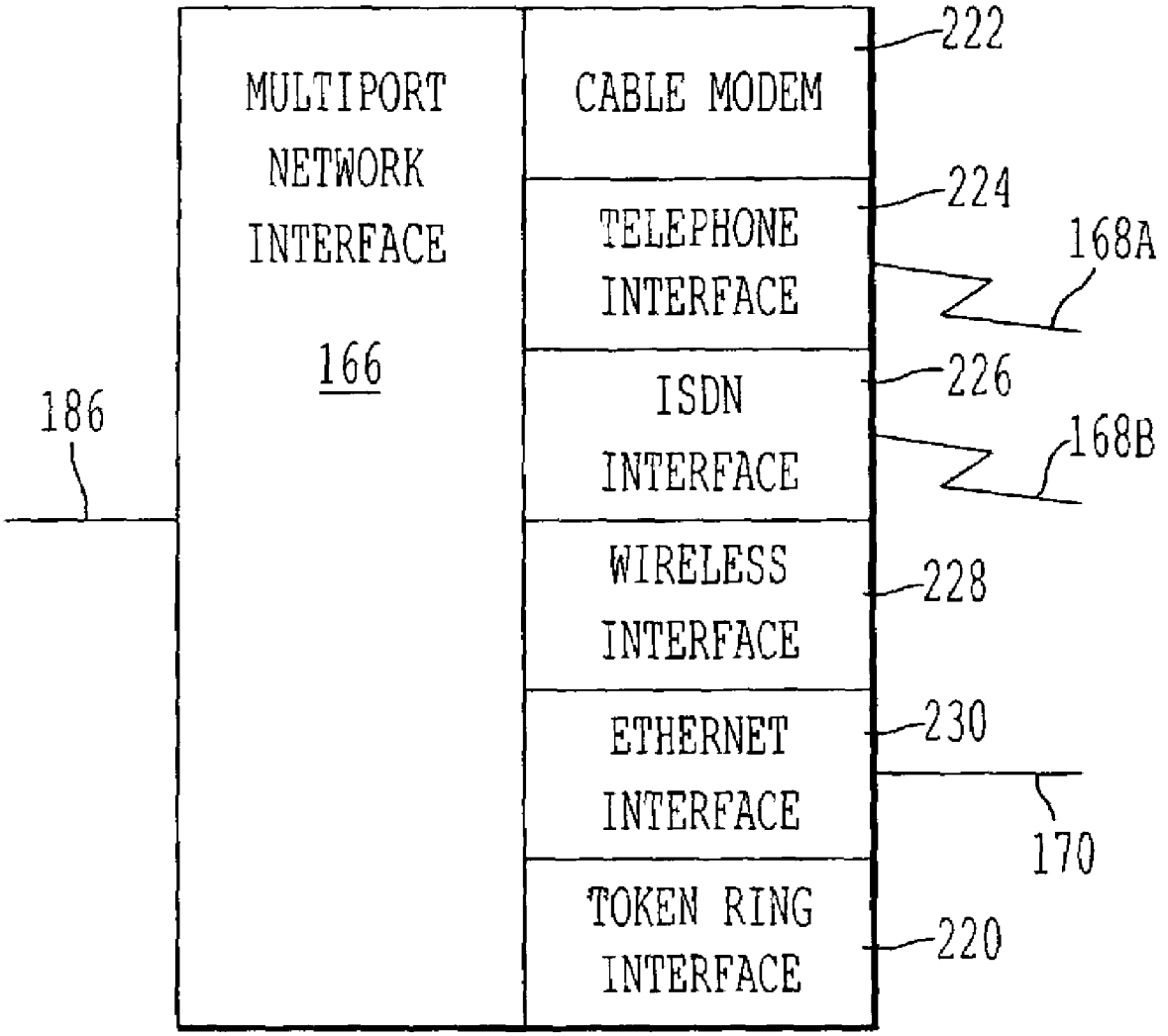
MULTIPORT
NETWORK
INTERFACE
166
186
CABLE MODEM
222
TELEPHONE
INTERFACE
224
168A
ISDN
INTERFACE
226
168B
WIRELESS
INTERFACE
228
ETHERNET
INTERFACE
230
170
TOKEN RING
INTERFACE
220

FIG. 4

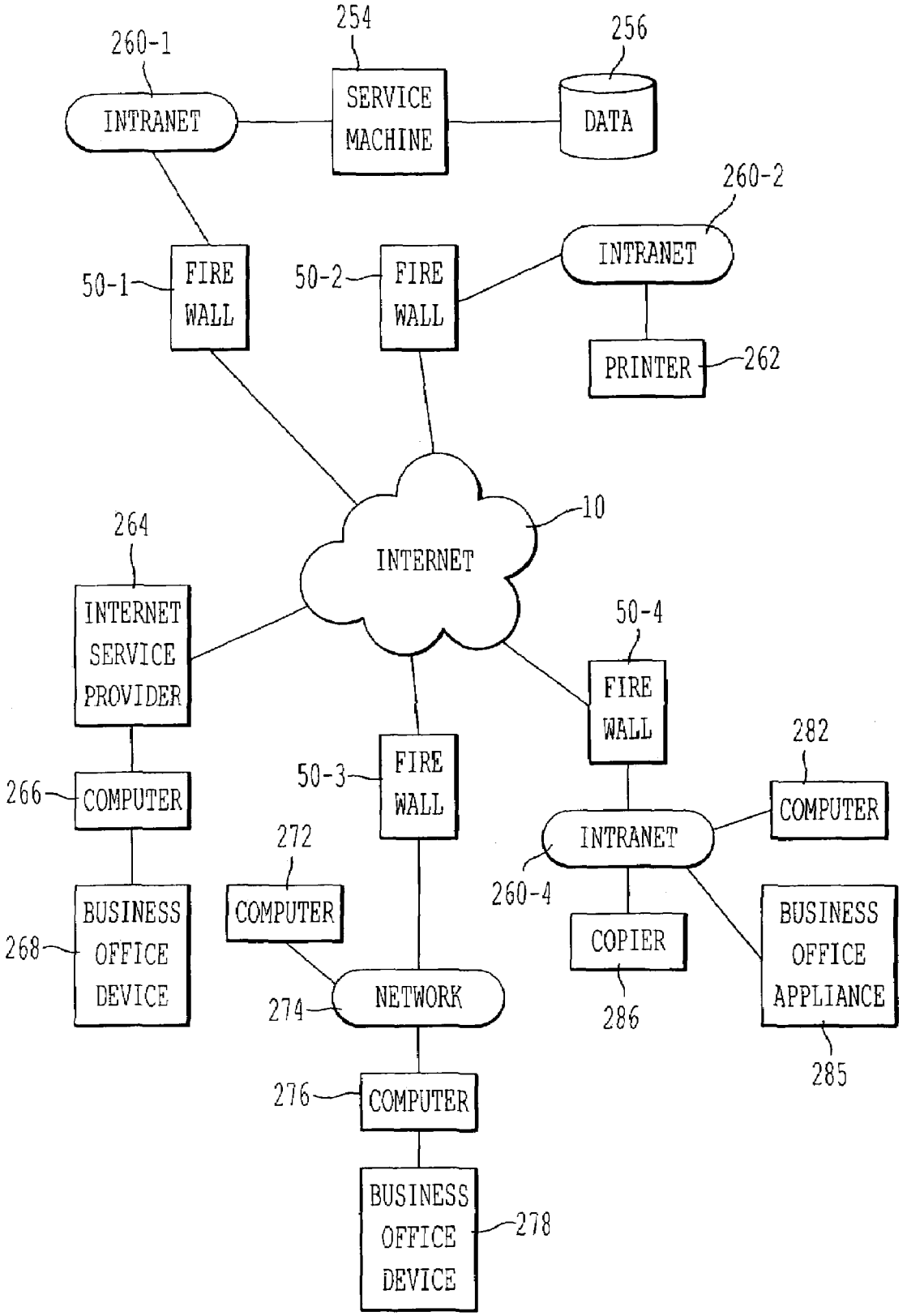
260-1
254
256
INTRANET
SERVICE MACHINE
DATA
260-2
50-1
FIRE WALL
50-2
FIRE WALL
INTRANET
PRINTER
262
10
INTERNET
264
INTERNET SERVICE PROVIDER
50-4
FIRE WALL
282
266
COMPUTER
50-3
FIRE WALL
COMPUTER
INTRANET
272
260-4
BUSINESS OFFICE DEVICE
268
COMPUTER
COPIER
BUSINESS OFFICE APPLIANCE
274
NETWORK
286
285
276
COMPUTER
BUSINESS OFFICE DEVICE
278

FIG. 5

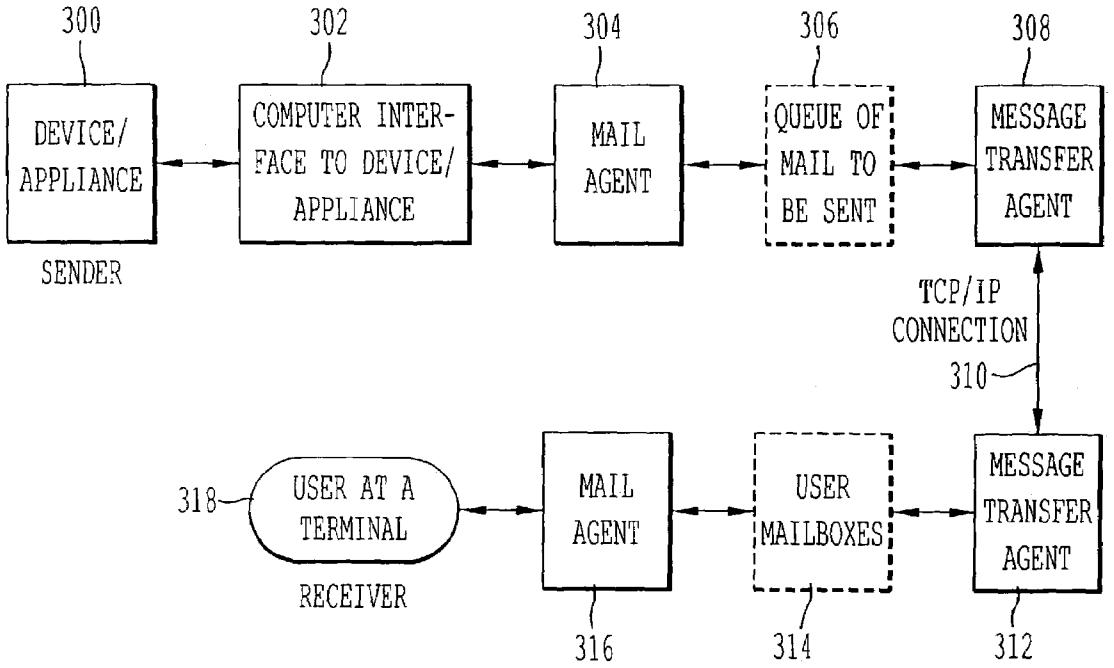
300
302
304
306
308
DEVICE/ APPLIANCE
COMPUTER INTER-FACE TO DEVICE/ APPLIANCE
MAIL AGENT
QUEUE OF MAIL TO BE SENT
MESSAGE TRANSFER AGENT
SENDER
TCP/IP CONNECTION
310
318
USER AT A TERMINAL
MAIL AGENT
USER MAILBOXES
MESSAGE TRANSFER AGENT
RECEIVER
316
314
312

FIG. 6A

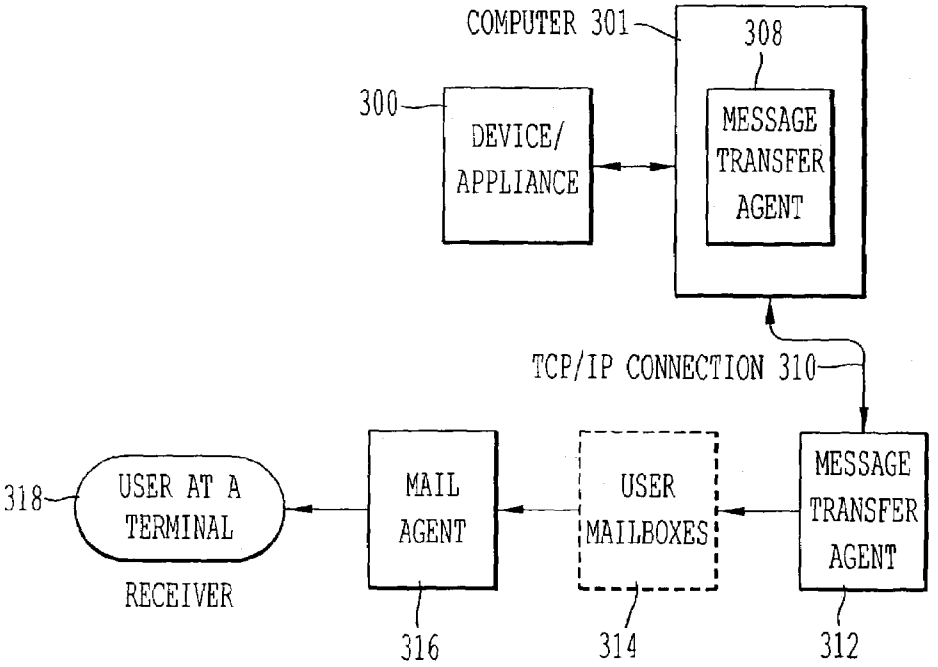
COMPUTER 301
308
300
DEVICE/ APPLIANCE
MESSAGE TRANSFER AGENT
TCP/IP CONNECTION 310
318
USER AT A TERMINAL
MAIL AGENT
USER MAILBOXES
MESSAGE TRANSFER AGENT
RECEIVER
316
314
312

FIG. 6B

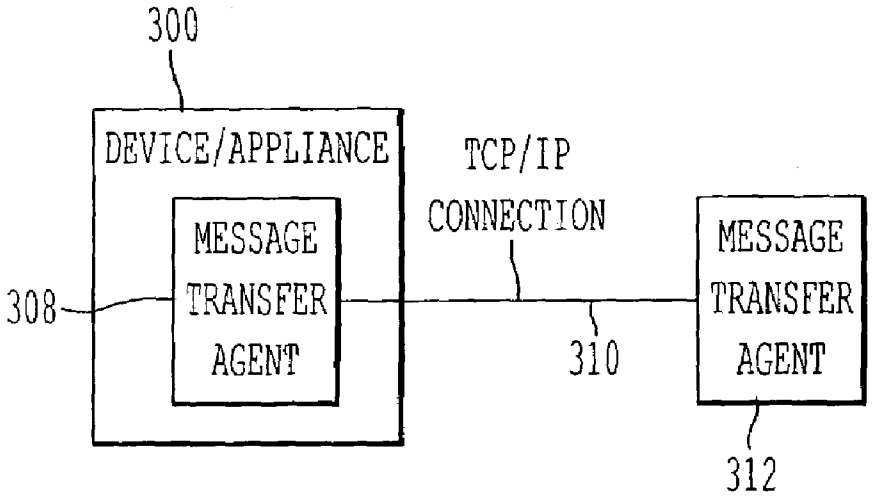
300
DEVICE/APPLIANCE
MESSAGE TRANSFER AGENT
308
TCP/IP CONNECTION
310
MESSAGE TRANSFER AGENT
312

FIG. 6C

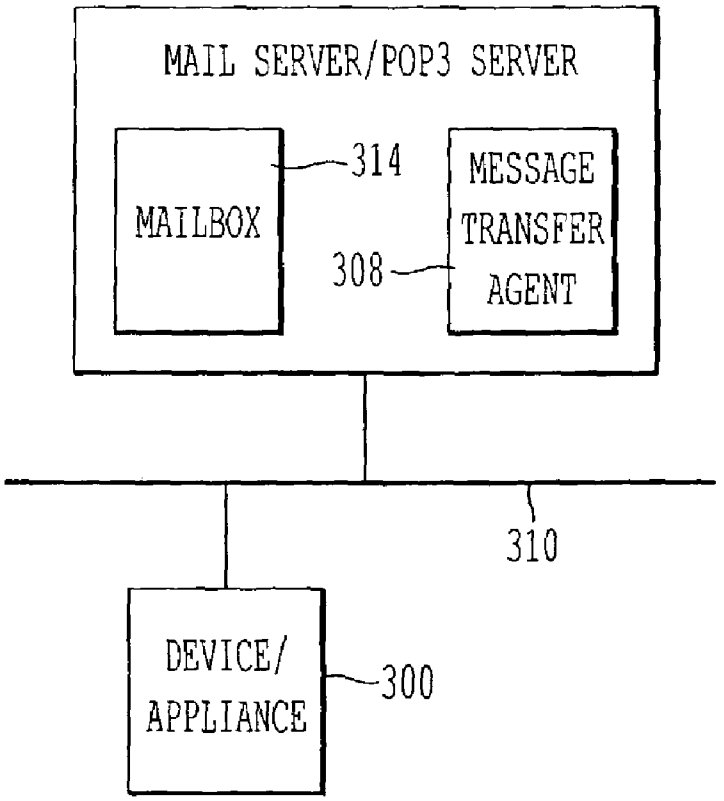
MAIL SERVER/POP3 SERVER
MAILBOX
314
MESSAGE TRANSFER AGENT
308
310
DEVICE/ APPLIANCE
300

FIG. 6D

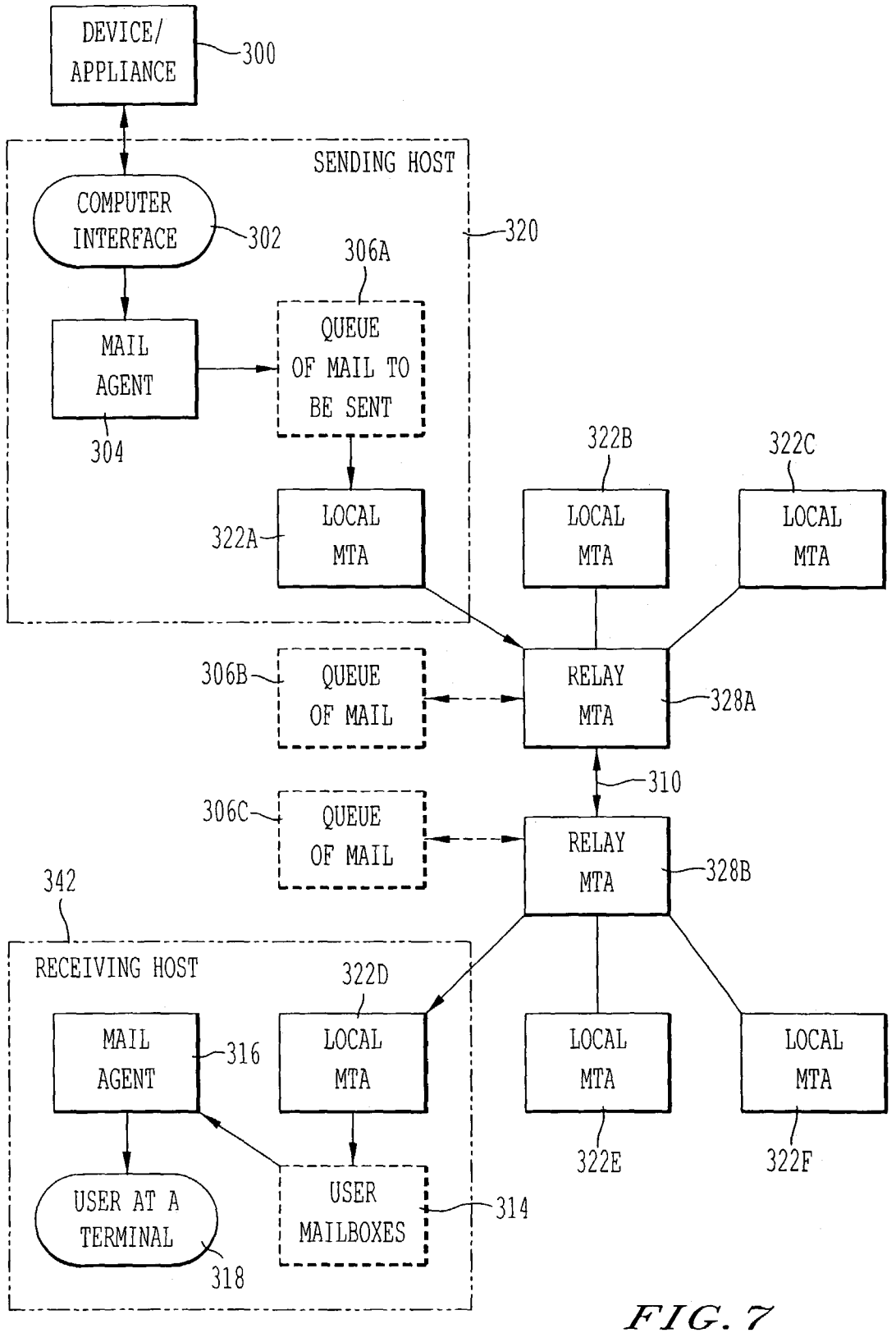
DEVICE/
APPLIANCE
300
SENDING HOST
COMPUTER
INTERFACE
302
320
306A
MAIL
AGENT
304
QUEUE
OF MAIL TO
BE SENT
322B
322C
LOCAL
MTA
322A
LOCAL
MTA
LOCAL
MTA
306B
QUEUE
OF MAIL
RELAY
MTA
328A
310
306C
QUEUE
OF MAIL
RELAY
MTA
328B
342
RECEIVING HOST
322D
MAIL
AGENT
316
LOCAL
MTA
LOCAL
MTA
LOCAL
MTA
USER AT A
TERMINAL
318
USER
MAILBOXES
314
322E
322F

FIG. 7

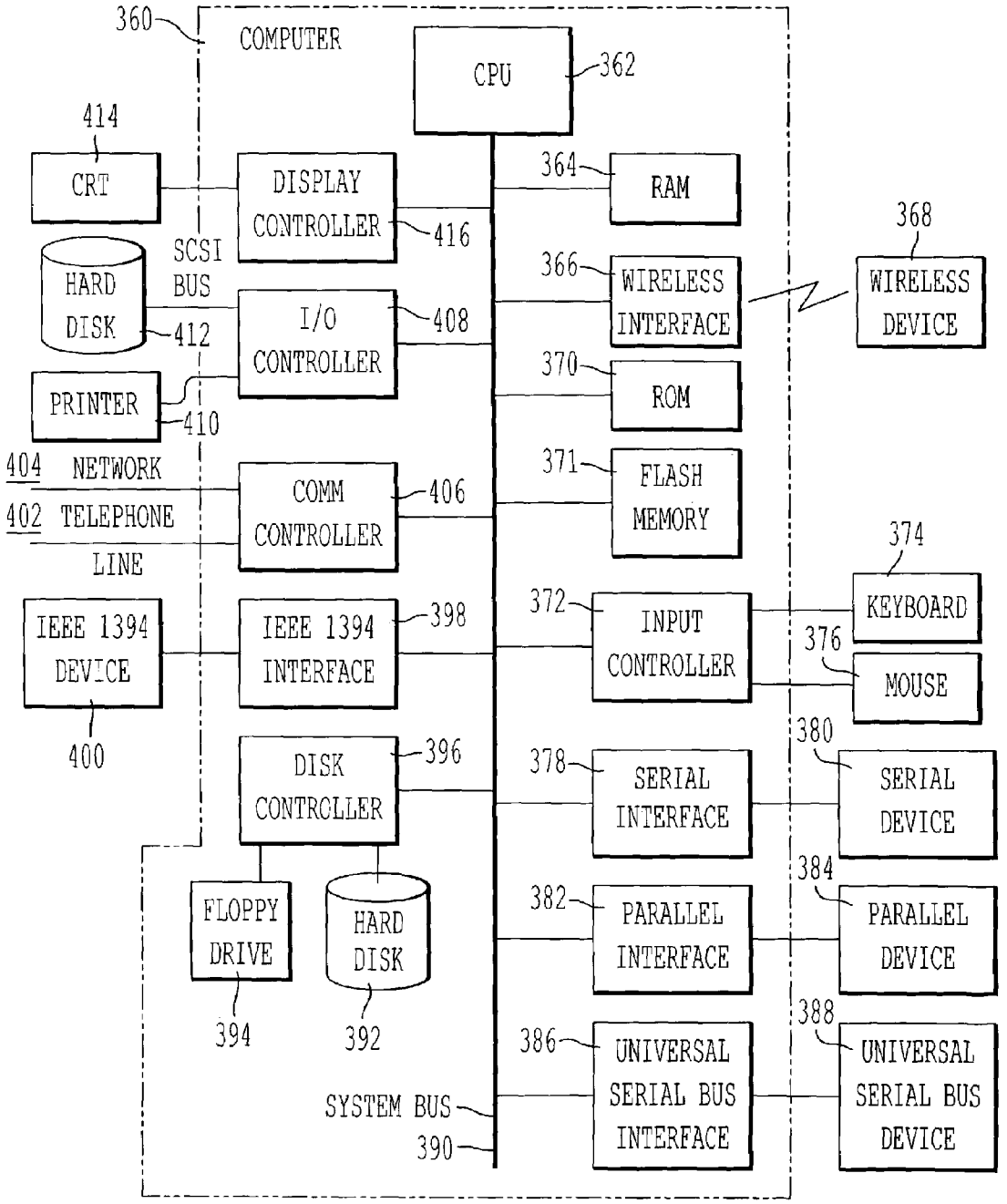
360
COMPUTER
CPU
362
414
CRT
DISPLAY CONTROLLER
416
364
RAM
368
WIRELESS DEVICE
366
WIRELESS INTERFACE
SCSI BUS
HARD DISK
412
I/O CONTROLLER
408
370
ROM
PRINTER
410
404 NETWORK
402 TELEPHONE LINE
COMM CONTROLLER
406
371
FLASH MEMORY
374
KEYBOARD
372
INPUT CONTROLLER
376
MOUSE
IEEE 1394 DEVICE
400
IEEE 1394 INTERFACE
398
380
SERIAL DEVICE
378
SERIAL INTERFACE
DISK CONTROLLER
396
384
PARALLEL DEVICE
382
PARALLEL INTERFACE
FLOPPY DRIVE
394
HARD DISK
392
388
UNIVERSAL SERIAL BUS DEVICE
386
UNIVERSAL SERIAL BUS INTERFACE
SYSTEM BUS
390

FIG. 8

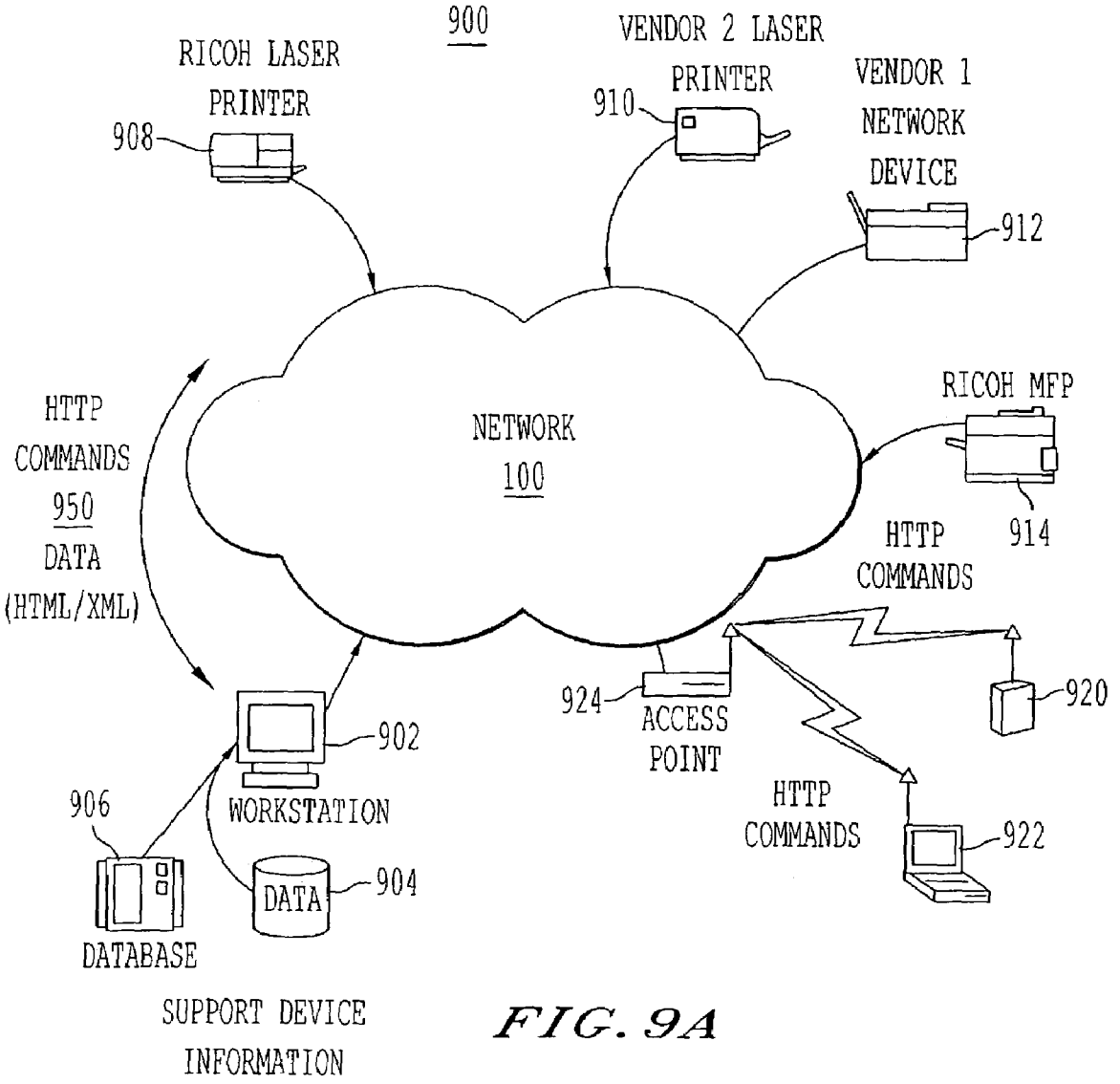
900
RICOH LASER PRINTER
908
VENDOR 2 LASER PRINTER
910
VENDOR 1 NETWORK DEVICE
912
NETWORK 100
RICOH MFP
914
HTTP COMMANDS 950
DATA (HTML/XML)
HTTP COMMANDS
924
ACCESS POINT
920
902
WORKSTATION
906
DATA
904
HTTP COMMANDS
922
DATABASE
SUPPORT DEVICE INFORMATION

FIG. 9A

FIG. 9B

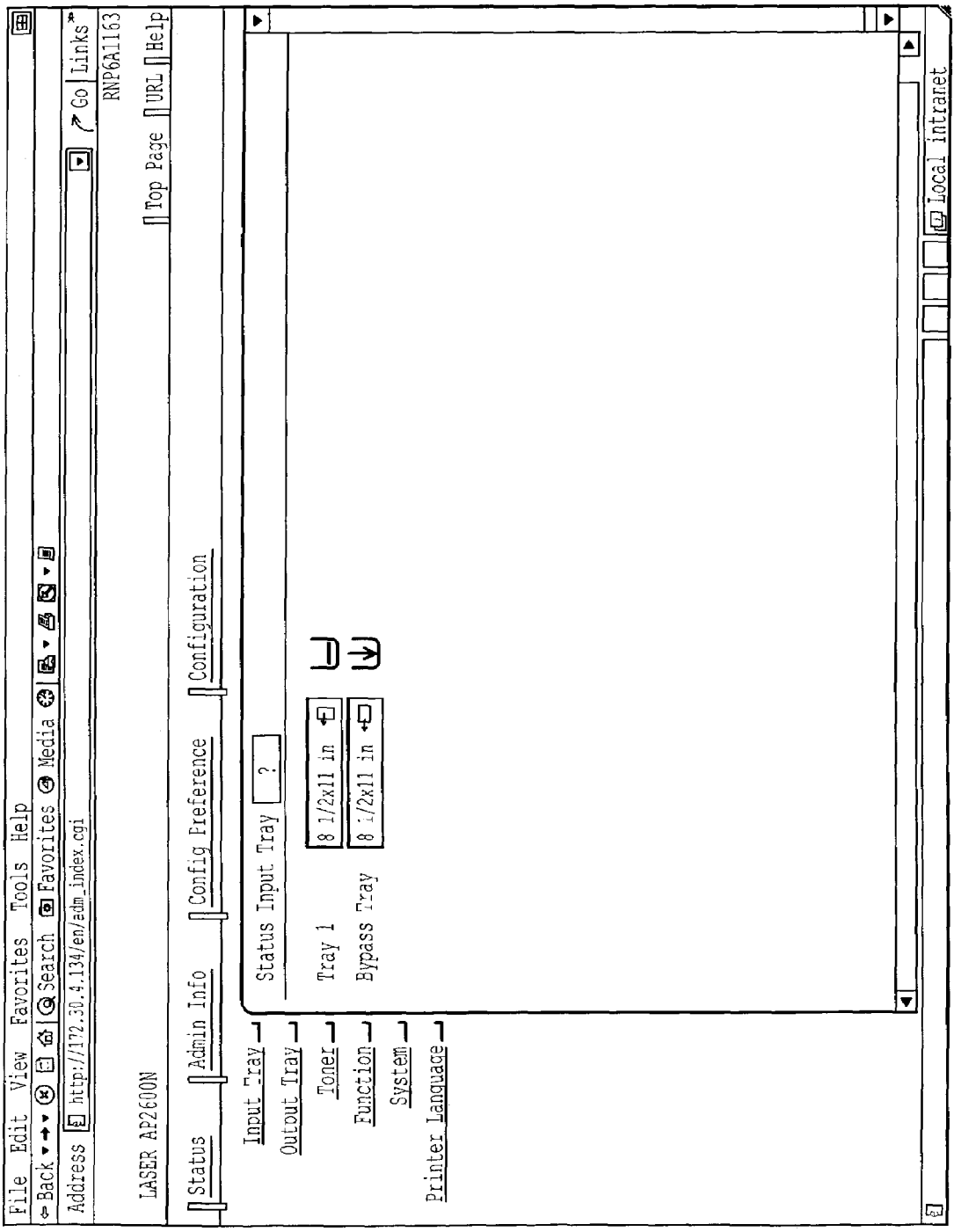
File Edit View Favorites Tools Help
Back Search Favorites Media
Address http://172.30.4.134/en/adm_index.cgi
Go Links
RNP6A1163
LASER AP2600N
Top Page URL Help
Status
Admin Info
Config Preference
Configuration
Input Tray
Output Tray
Toner
Function
System
Printer Language
Status Input Tray ?
Tray 1
8 1/2x11 in
Bypass Tray
8 1/2x11 in
Local intranet

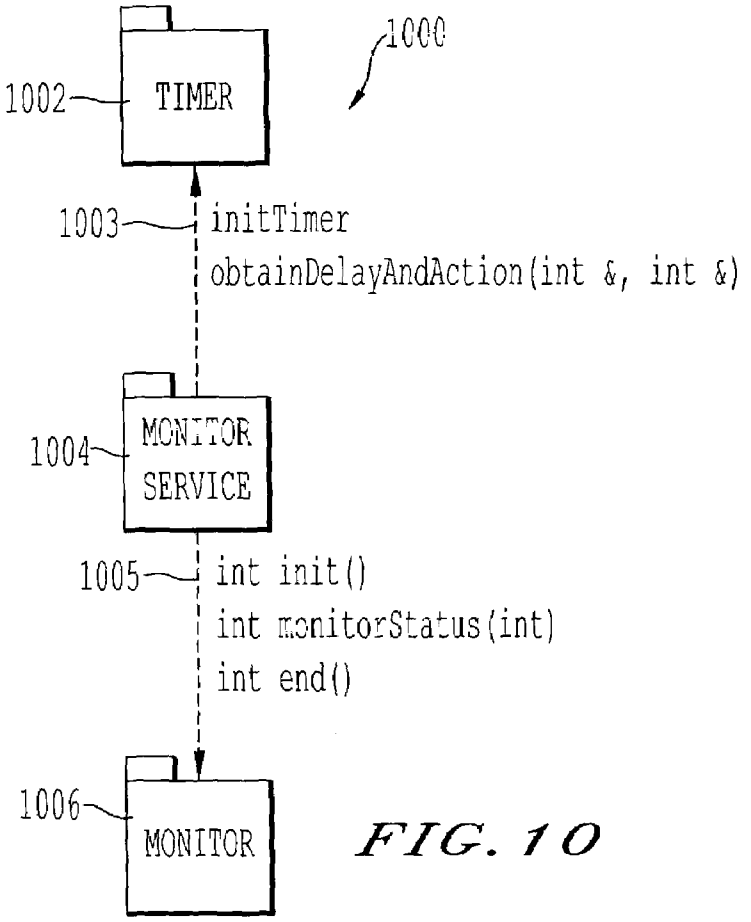
1000
1002
TIMER
1003
initTimer
obtainDelayAndAction(int &, int &)
1004
MONITOR SERVICE
1005
int init()
int monitorStatus(int)
int end()
1006
MONITOR

FIG. 10

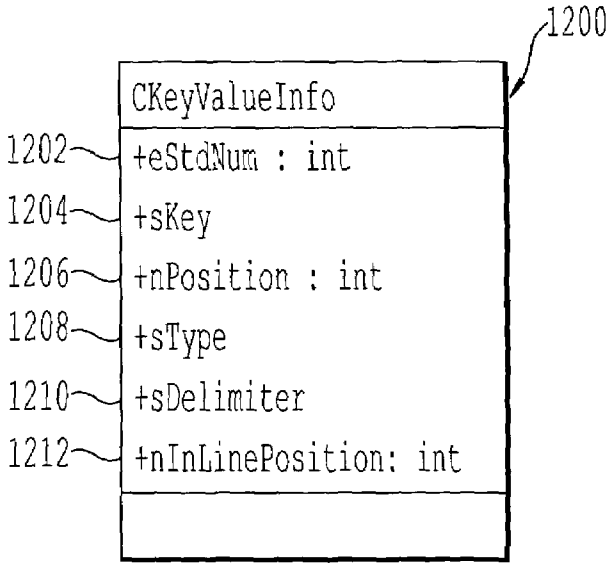
1200
CKeyValueInfo
1202
+eStdNum : int
1204
+sKey
1206
+nPosition : int
1208
+sType
1210
+sDelimiter
1212
+nInLinePosition: int

FIG. 12

FIG. 11A

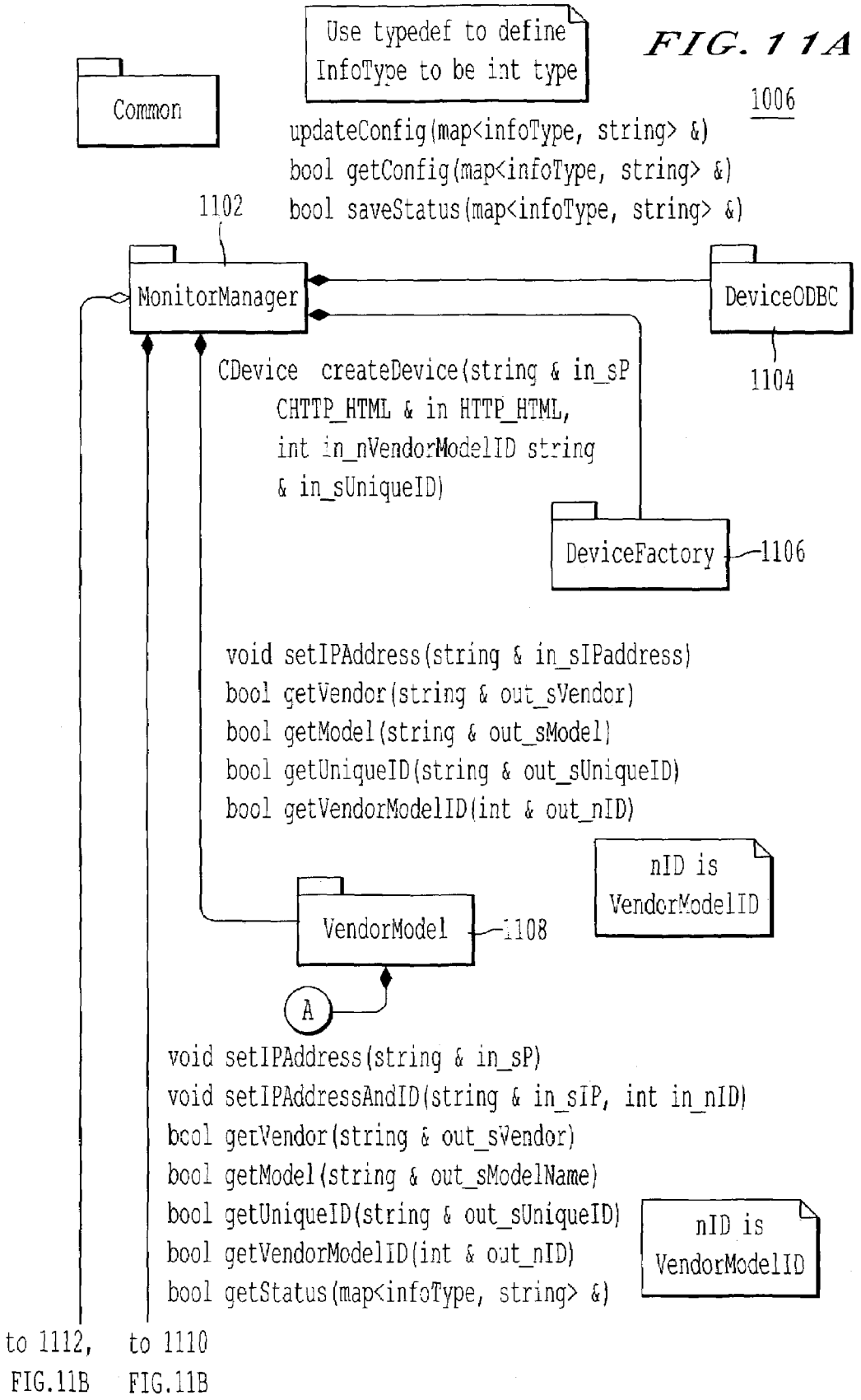
Use typedef to define InfoType to be int type
Common
1006
updateConfig(map<infoType, string> &)
bool getConfig(map<infoType, string> &)
bool saveStatus(map<infoType, string> &)
1102
MonitorManager
DeviceODBC
1104
CDevice createDevice(string & in_sP
CHTTP_HTML & in HTTP_HTML,
int in_nVendorModelID string
& in_sUniqueID)
DeviceFactory
1106
void setIPAddress(string & in_sIPaddress)
bool getVendor(string & out_sVendor)
bool getModel(string & out_sModel)
bool getUniqueID(string & out_sUniqueID)
bool getVendorModelID(int & out_nID)
nID is VendorModelID
VendorModel
1108
A
void setIPAddress(string & in_sP)
void setIPAddressAndID(string & in_sIP, int in_nID)
bool getVendor(string & out_sVendor)
bool getModel(string & out_sModelName)
bool getUniqueID(string & out_sUniqueID)
bool getVendorModelID(int & out_nID)
bool getStatus(map<infoType, string> &)
nID is VendorModelID
to 1112, FIG.11B
to 1110 FIG.11B

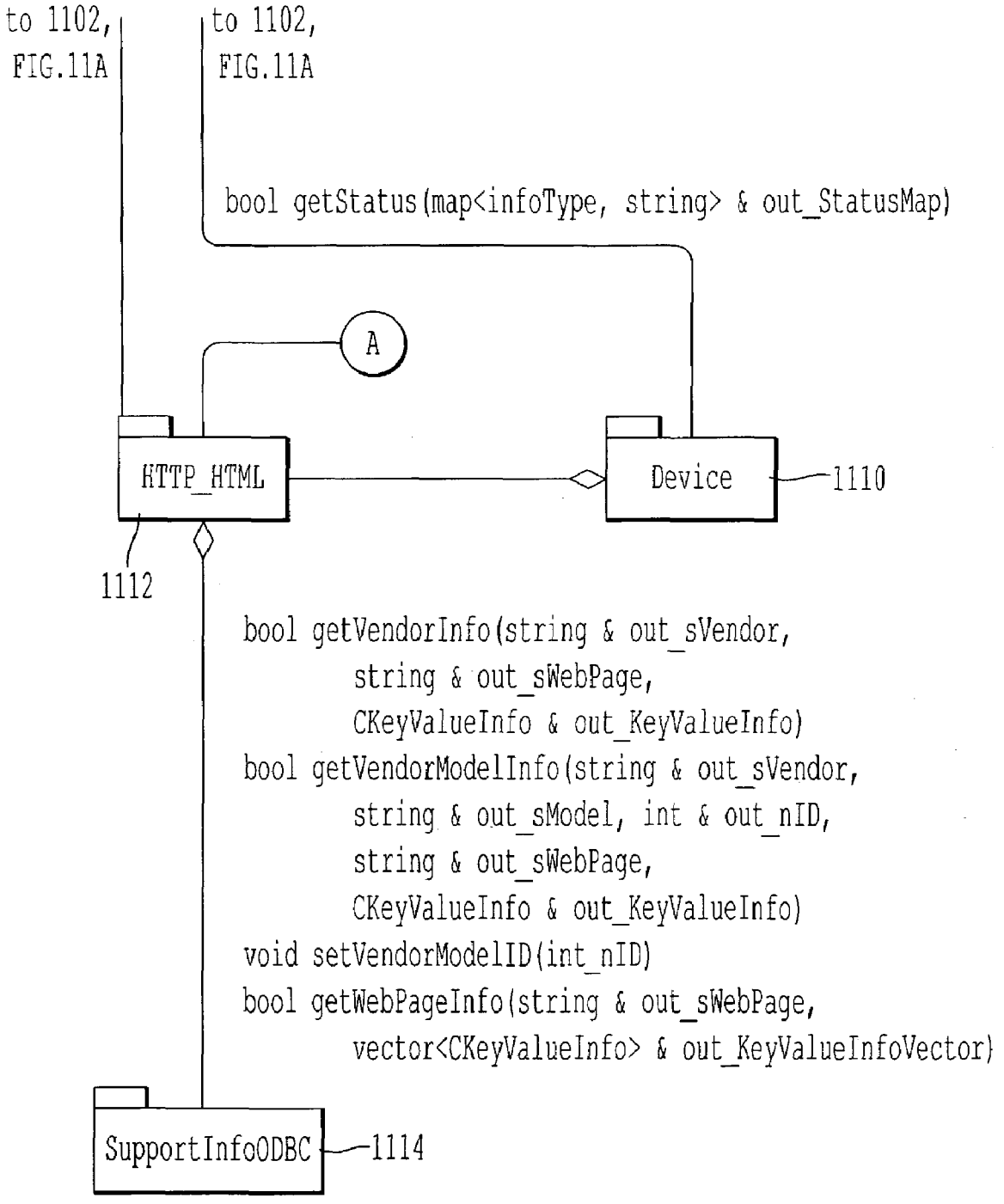
to 1102, FIG.11A
to 1102, FIG.11A
bool getStatus(map<infoType, string> & out_StatusMap)
A
HTTP_HTML
Device
1110
1112
bool getVendorInfo(string & out_sVendor,
string & out_sWebPage,
CKeyValueInfo & out_KeyValueInfo)
bool getVendorModelInfo(string & out_sVendor,
string & out_sModel, int & out_nID,
string & out_sWebPage,
CKeyValueInfo & out_KeyValueInfo)
void setVendorModelID(int_nID)
bool getWebPageInfo(string & out_sWebPage,
vector<CKeyValueInfo> & out_KeyValueInfoVector)
SupportInfoODBC
1114

FIG. 11B

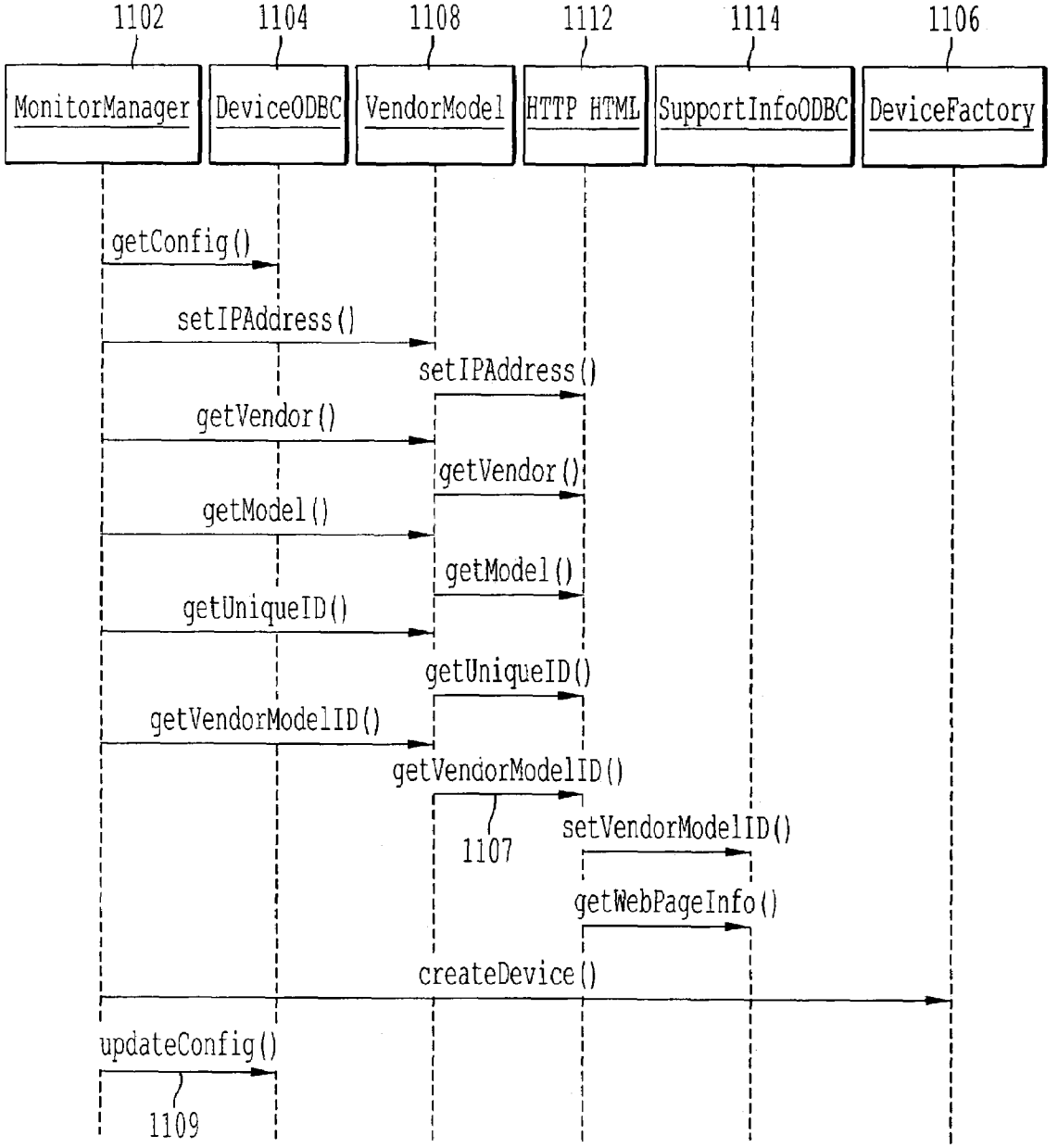
1102
1104
1108
1112
1114
1106
MonitorManager
DeviceODBC
VendorModel
HTTP HTML
SupportInfoODBC
DeviceFactory
getConfig()
setIPAddress()
setIPAddress()
getVendor()
getVendor()
getModel()
getModel()
getUniqueID()
getUniqueID()
getVendorModelID()
getVendorModelID()
1107
setVendorModelID()
getWebPageInfo()
createDevice()
updateConfig()
1109

FIG. 13

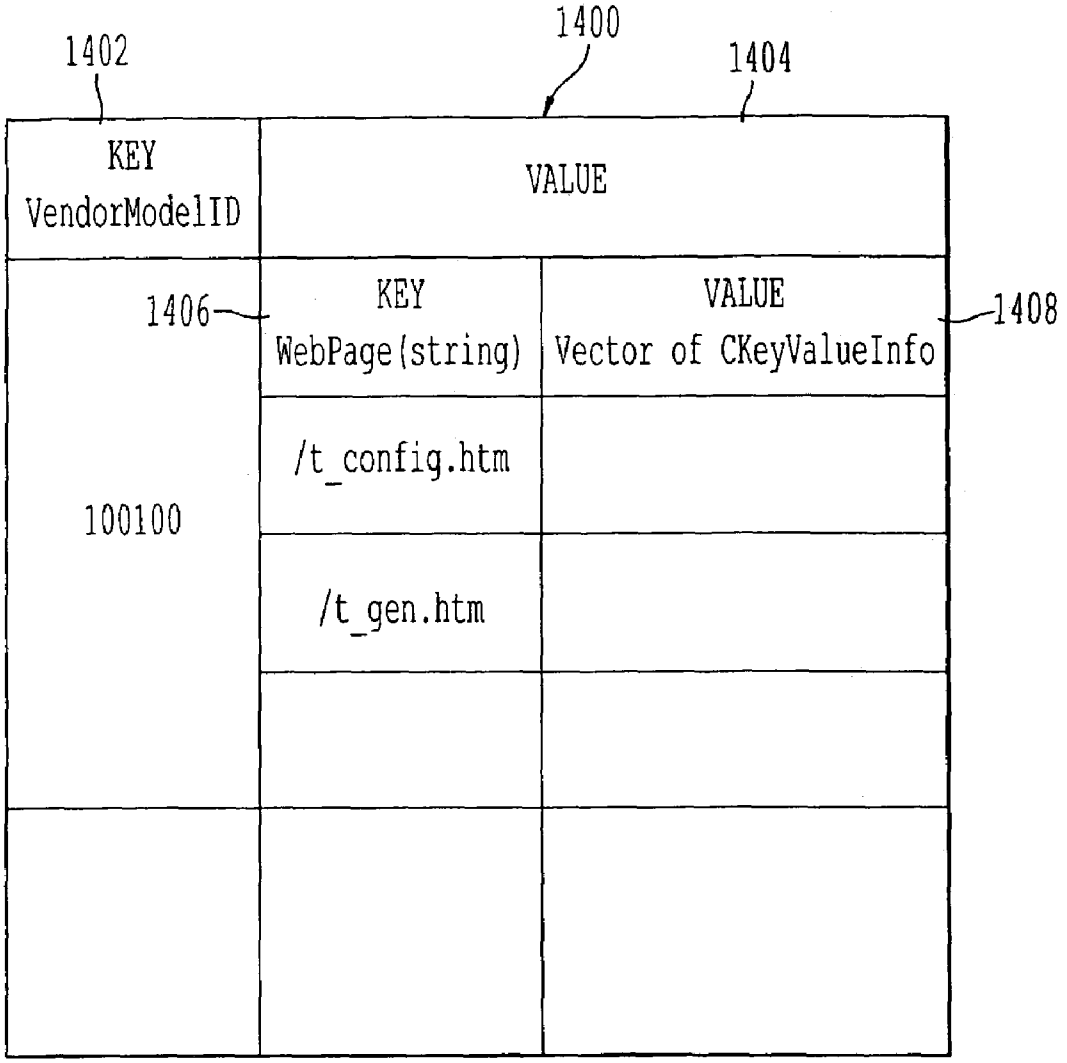
1400
1402
1404
KEY
VendorModelID
VALUE
1406
KEY
WebPage(string)
VALUE
Vector of CKeyValueInfo
1408
/t_config.htm
100100
/t_gen.htm

FIG. 14

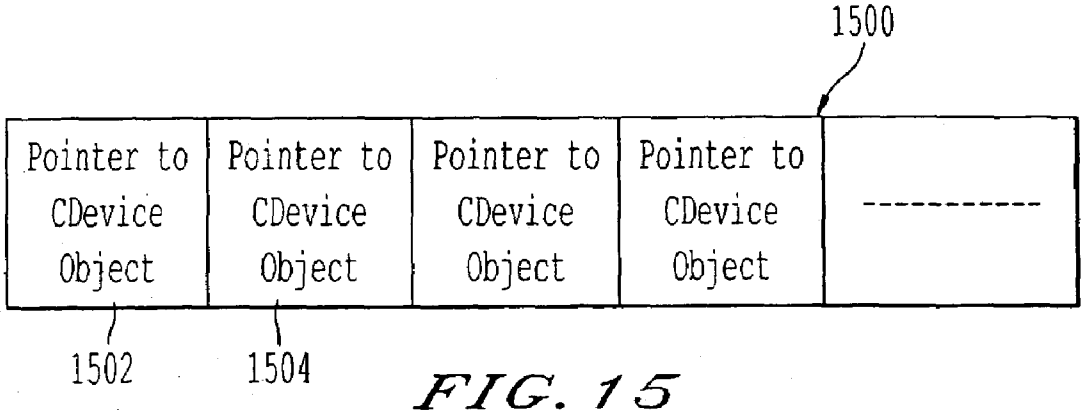
1500
Pointer to CDevice Object
Pointer to CDevice Object
Pointer to CDevice Object
Pointer to CDevice Object

1502
1504

FIG. 15

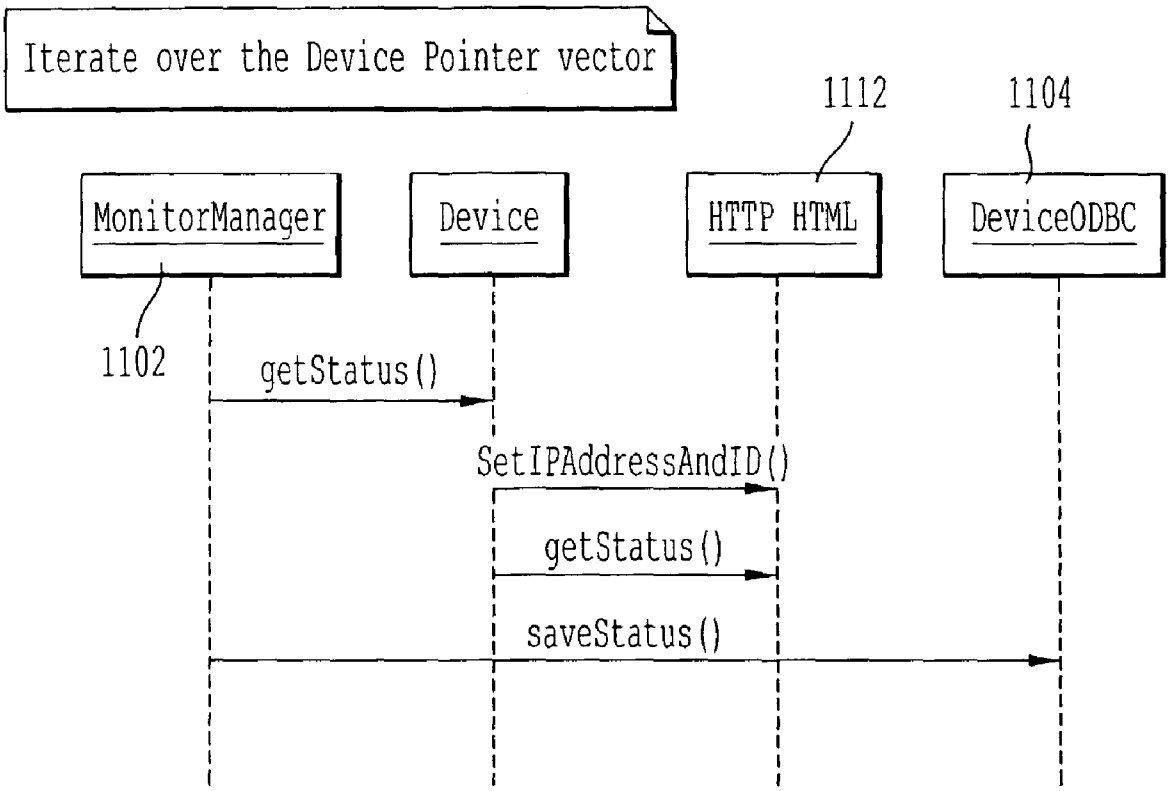
Iterate over the Device Pointer vector
1112
1104
MonitorManager
Device
HTTP HTML
DeviceODBC
1102
getStatus()
SetIPAddressAndID()
getStatus()
saveStatus()

FIG. 16

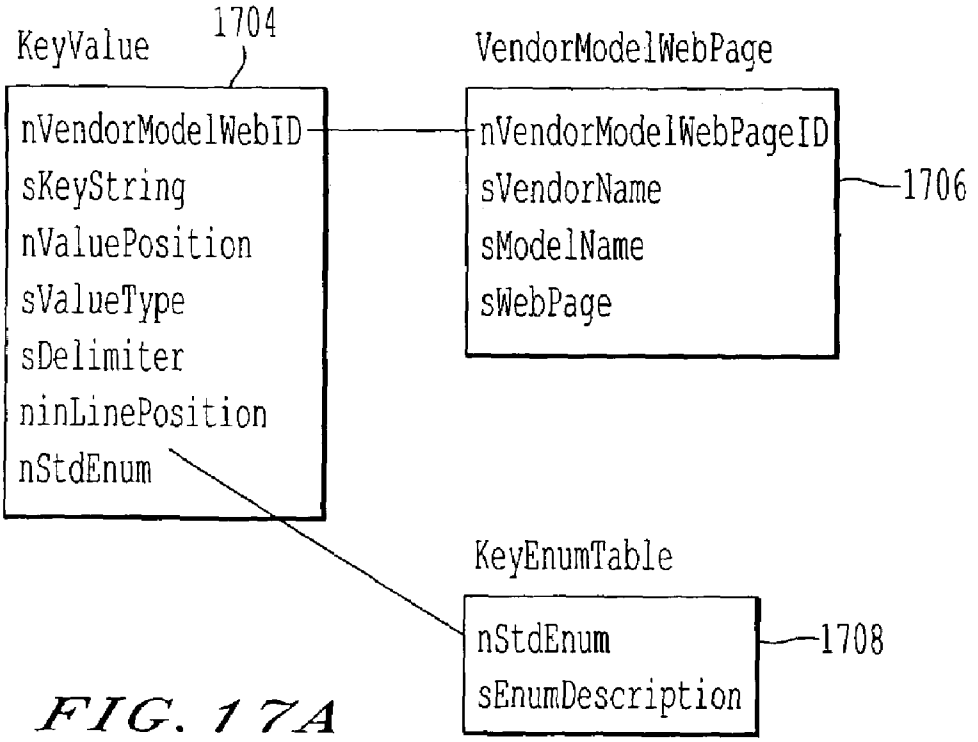

FIG. 17A

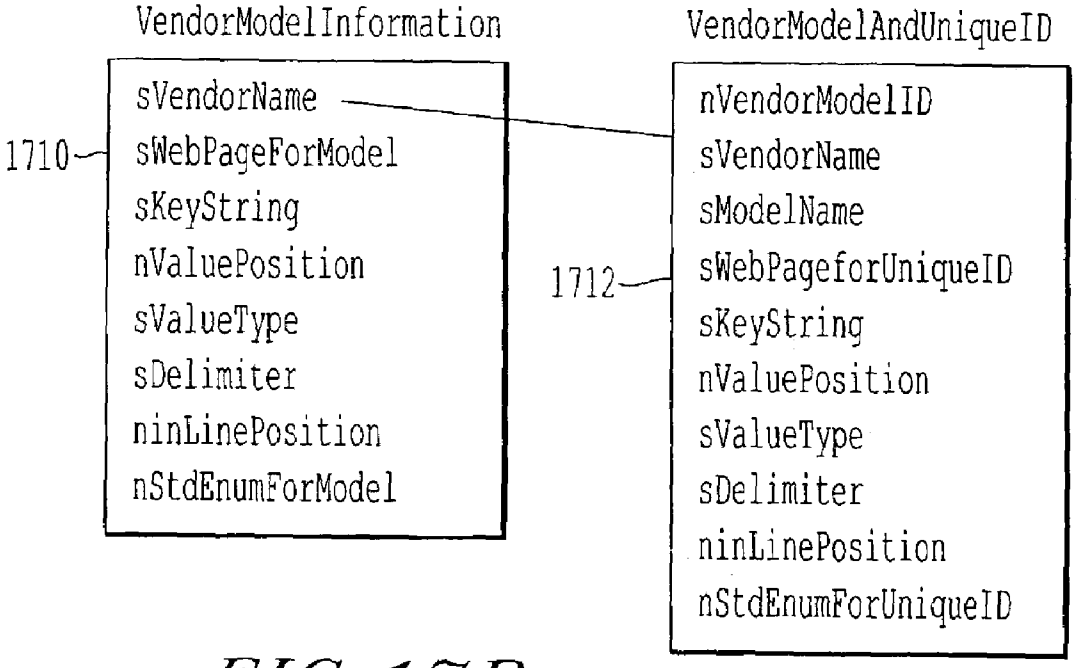

FIG. 17B

IP Address

sIPAddress	sVendor	sModel	nVendorModelID
172.30.4.51	Vendor1	NC60	100100
172.30.4.52	Vendor1	N4025	100200
172.30.4.53	Vendor2	Model 9000	200100

1702

KeyValue

nVendorModelWebID	sKeyString	sValuePosition	SValueType	sDelimiter	ninLinePosition	nStdEnum
100101	Serial Number	1	char			102
100101	Machine Model	1	char			101
100103	Black Toner	1	char			700
100103	Cyan Toner	1	char			702
100201	Serial Number	1	char			102
100201	Machine Model	1	char			101
100203	Toner	1	char			700
200101	Product Name	0	char	:	1	101
200101	Printer Serial No.	0	char	:	1	102
200103	Black	2	Num	%		101

1704, 1714, 1716

VendorModelWebPage

nVendorModelWebID	sWebPage
100101	/configurationPage.htm
100103	/consumablePage.htm
100201	/configurationPage.htm
100203	/consumablePage.htm
200101	/Vendor2/first
200103	/Vendor2/second

1706

KeyEnumTable

nStdEnum	sEnumDescription
101	Model
102	UniqueID
700	Black
701	Magenta
702	Cyan
703	Yellow

1708

FIG. 17C

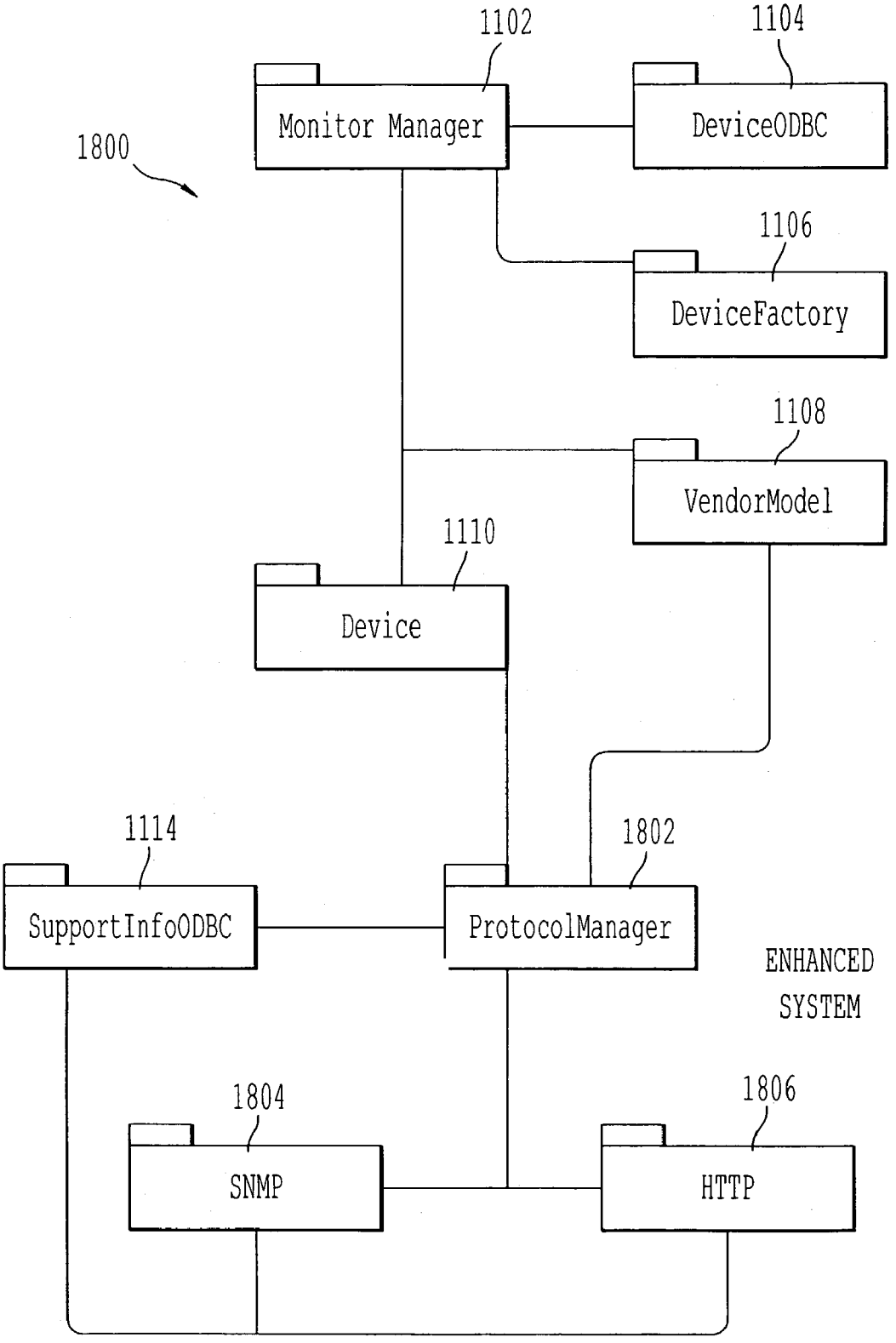
1800
1102
Monitor Manager
1104
DeviceODBC
1106
DeviceFactory
1108
VendorModel
1110
Device
1114
SupportInfoODBC
1802
ProtocolManager
ENHANCED
SYSTEM
1804
SNMP
1806
HTTP

FIG. 18

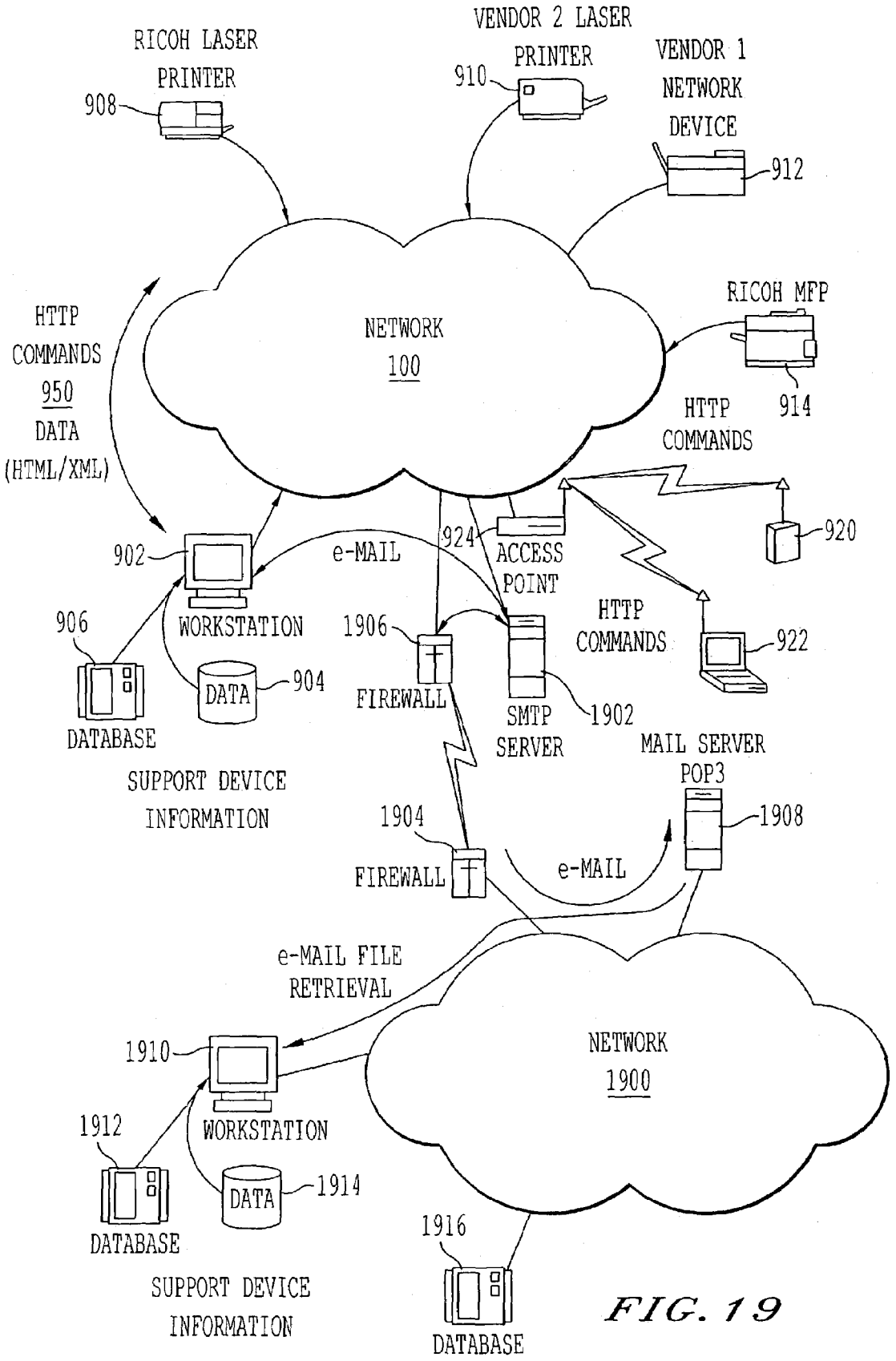
RICOH LASER PRINTER
908
VENDOR 2 LASER PRINTER
910
VENDOR 1 NETWORK DEVICE
912
NETWORK 100
RICOH MFP
914
HTTP COMMANDS 950 DATA (HTML/XML)
HTTP COMMANDS
920
924
ACCESS POINT
902
e-MAIL
WORKSTATION
906
DATABASE
DATA
904
SUPPORT DEVICE INFORMATION
1906
FIREWALL
HTTP COMMANDS
922
SMTP SERVER
1902
MAIL SERVER POP3
1908
1904
FIREWALL
e-MAIL
e-MAIL FILE RETRIEVAL
NETWORK 1900
1910
WORKSTATION
1912
DATABASE
DATA
1914
SUPPORT DEVICE INFORMATION
1916
DATABASE

FIG. 19

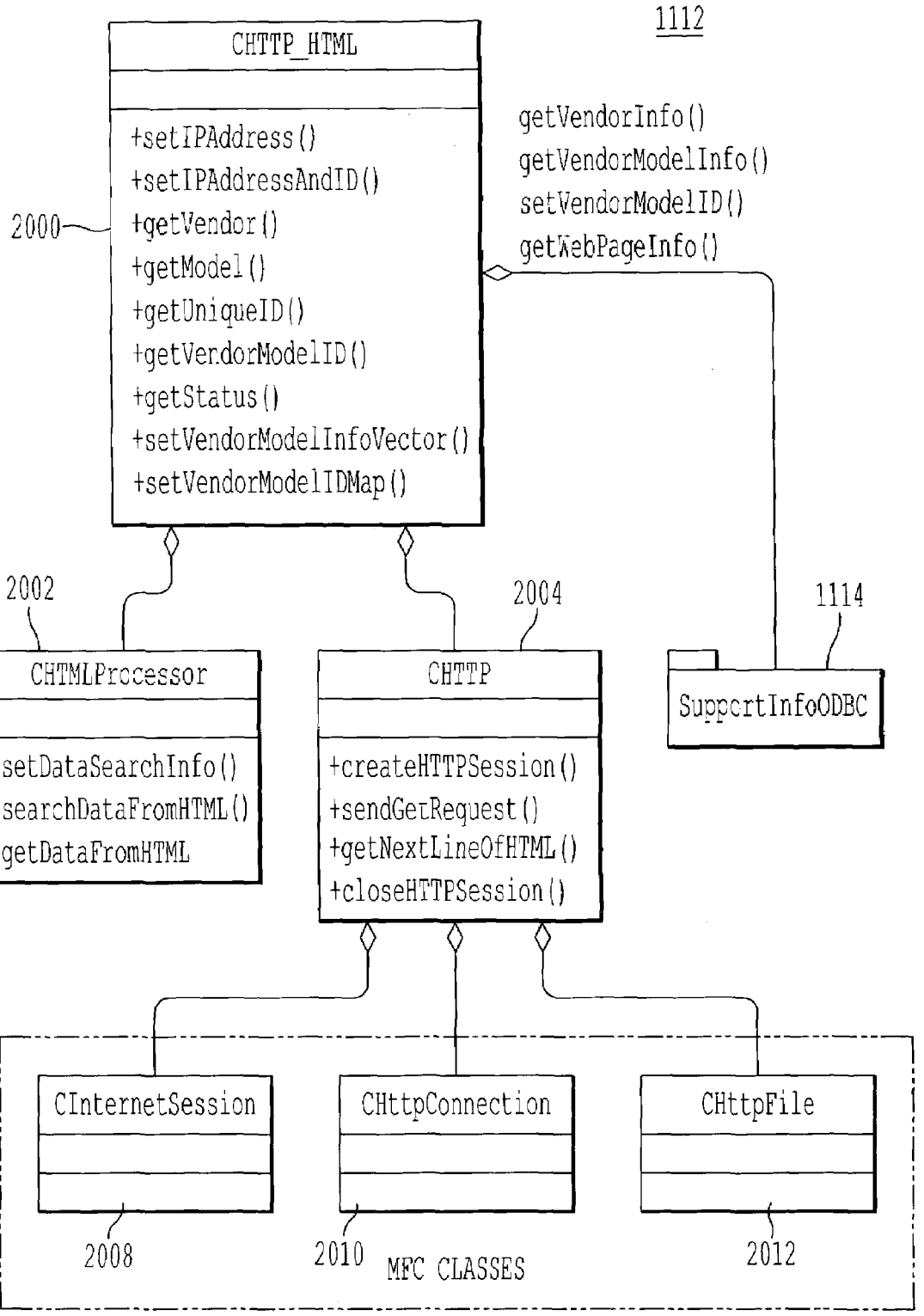
1112
CHTTP_HTML
+setIPAddress()
+setIPAddressAndID()
+getVendor()
+getModel()
+getUniqueID()
+getVendorModelID()
+getStatus()
+setVendorModelInfoVector()
+setVendorModelIDMap()
getVendorInfo()
getVendorModelInfo()
setVendorModelID()
getWebPageInfo()
2000
2002
2004
1114
CHTMLProcessor
+setDataSearchInfo()
+searchDataFromHTML()
+getDataFromHTML
CHTTP
+createHTTPSession()
+sendGetRequest()
+getNextLineOfHTML()
+closeHTTPSession()
SupportInfoODBC
CInternetSession
CHttpConnection
CHttpFile
2008
2010
2012
MFC CLASSES

FIG. 20

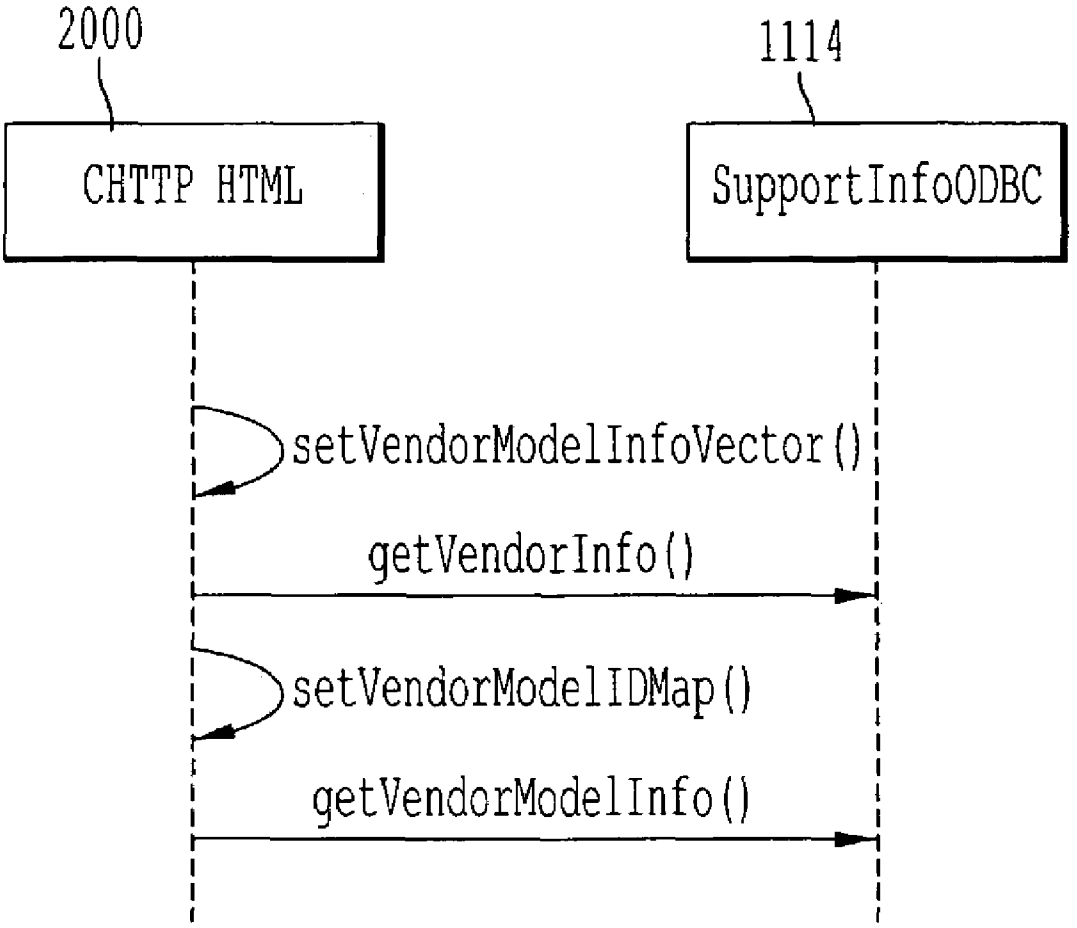
2000
1114
CHTTP HTML
SupportInfoODBC
setVendorModelInfoVector()
getVendorInfo()
setVendorModelIDMap()
getVendorModelInfo()

FIG. 21

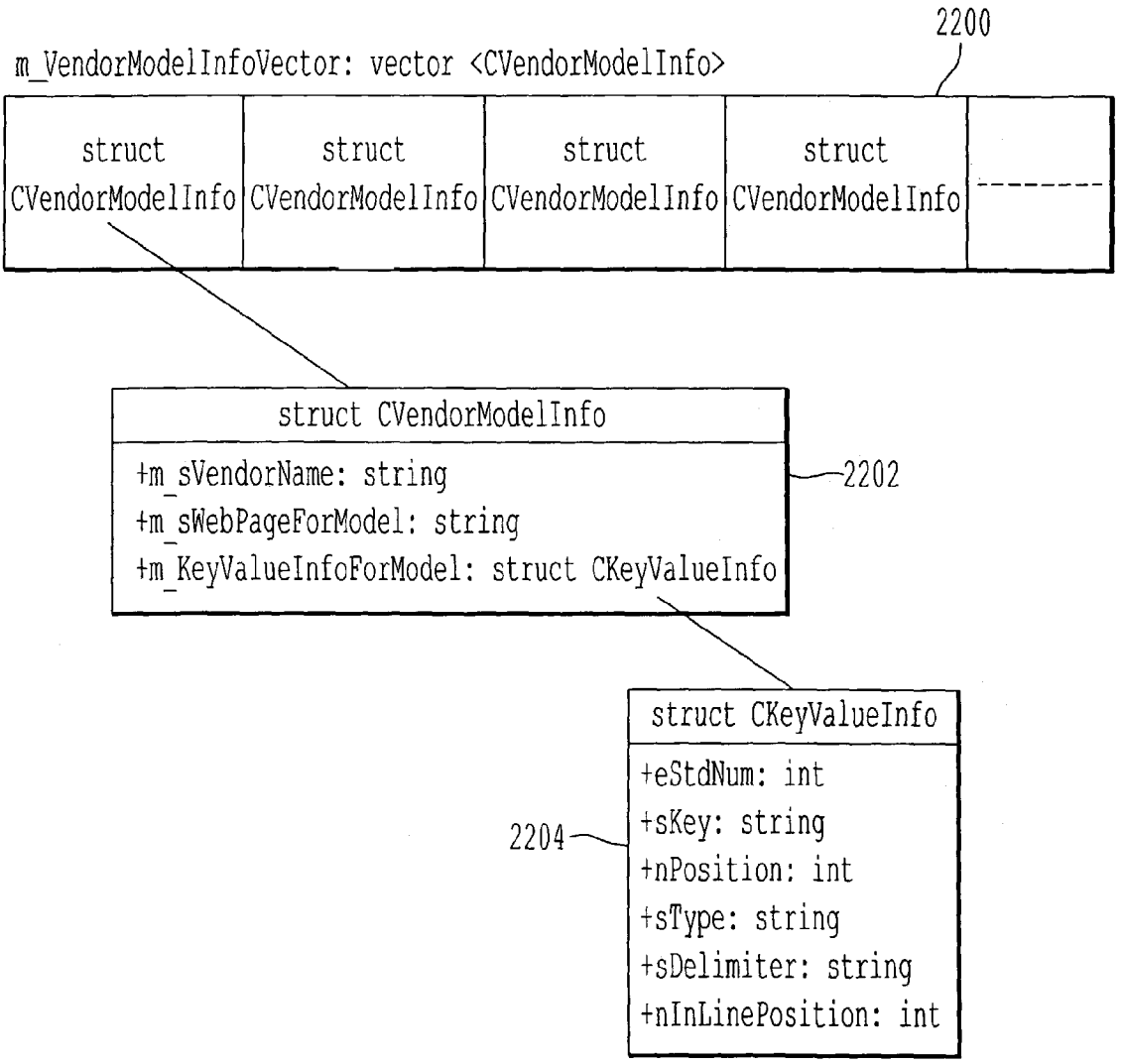
2200
m_VendorModelInfoVector: vector <CVendorModelInfo>
struct CVendorModelInfo
struct CVendorModelInfo
struct CVendorModelInfo
struct CVendorModelInfo
struct CVendorModelInfo
+m_sVendorName: string
+m_sWebPageForModel: string
+m_KeyValueInfoForModel: struct CKeyValueInfo
2202
struct CKeyValueInfo
+eStdNum: int
+sKey: string
+nPosition: int
+sType: string
+sDelimiter: string
+nInLinePosition: int
2204

FIG. 22

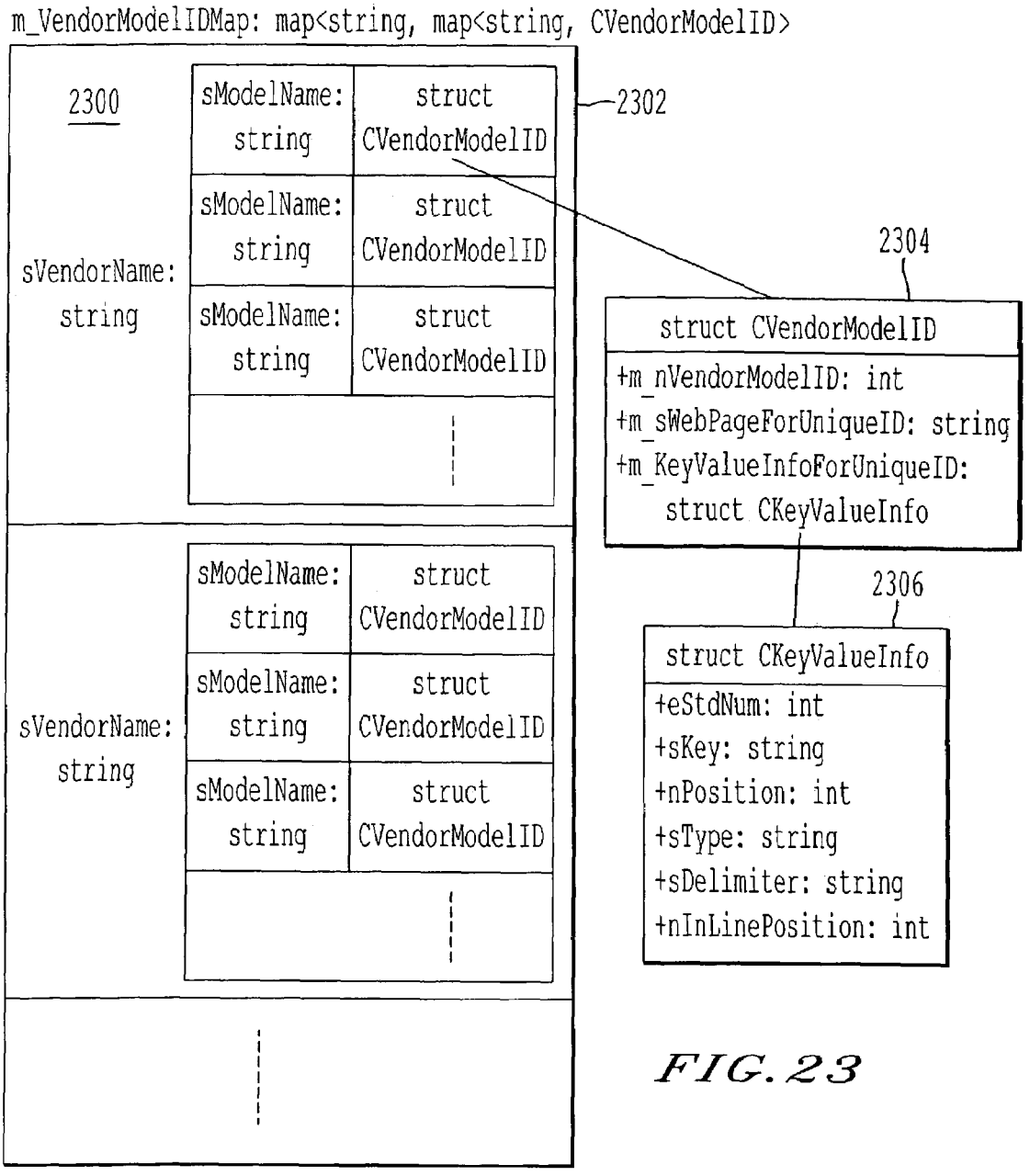
m_VendorModelIDMap: map<string, map<string, CVendorModelID>
2300
sVendorName: string
sModelName: string
struct CVendorModelID
2302
2304
struct CVendorModelID
+m_nVendorModelID: int
+m_sWebPageForUniqueID: string
+m_KeyValueInfoForUniqueID: struct CKeyValueInfo
2306
struct CKeyValueInfo
+eStdNum: int
+sKey: string
+nPosition: int
+sType: string
+sDelimiter: string
+nInLinePosition: int

FIG. 23

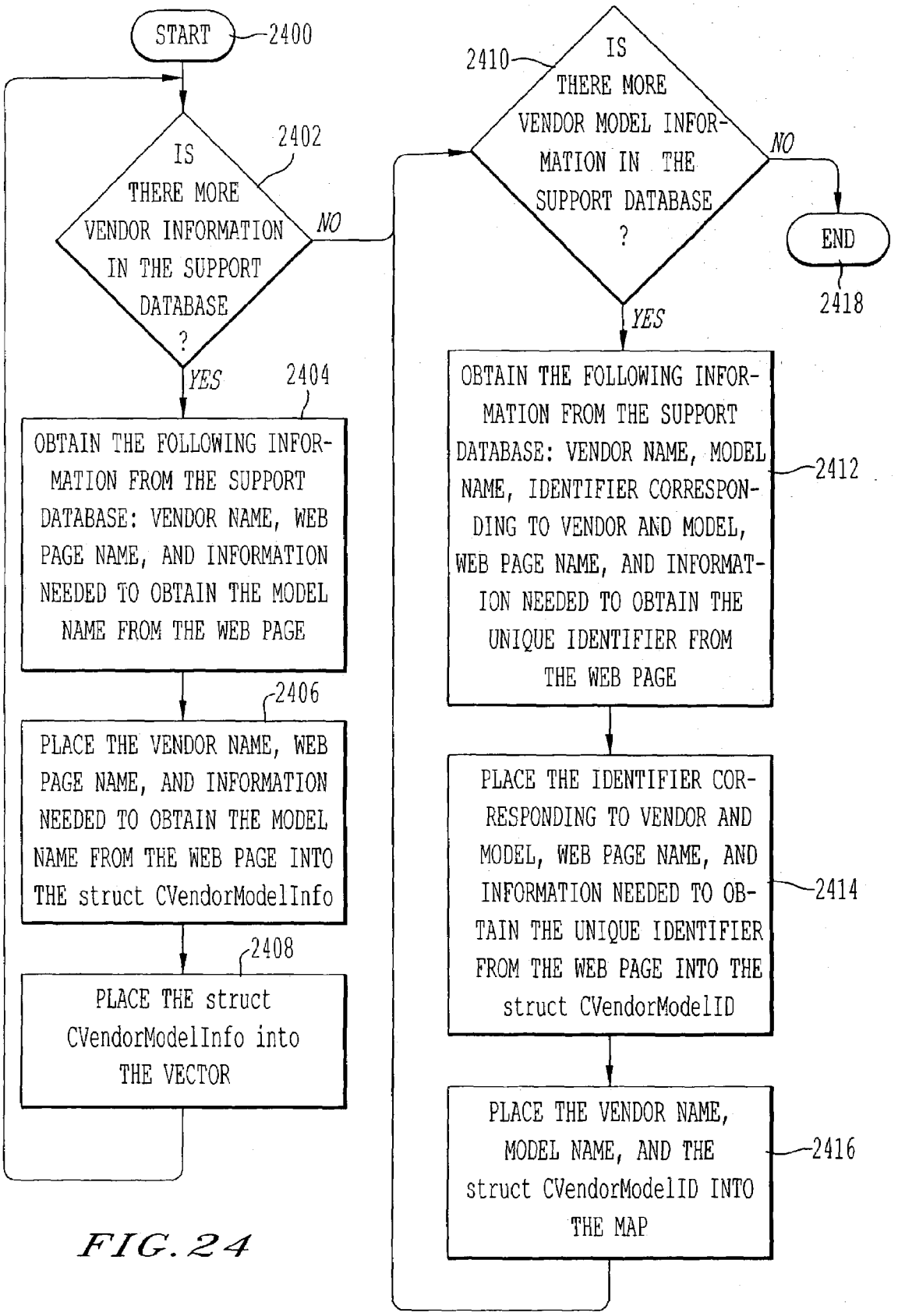
START
2400
IS THERE MORE VENDOR INFORMATION IN THE SUPPORT DATABASE ?
2402
NO
YES
OBTAIN THE FOLLOWING INFORMATION FROM THE SUPPORT DATABASE: VENDOR NAME, WEB PAGE NAME, AND INFORMATION NEEDED TO OBTAIN THE MODEL NAME FROM THE WEB PAGE
2404
PLACE THE VENDOR NAME, WEB PAGE NAME, AND INFORMATION NEEDED TO OBTAIN THE MODEL NAME FROM THE WEB PAGE INTO THE struct CVendorModelInfo
2406
PLACE THE struct CVendorModelInfo into THE VECTOR
2408
IS THERE MORE VENDOR MODEL INFORMATION IN THE SUPPORT DATABASE ?
2410
NO
YES
END
2418
OBTAIN THE FOLLOWING INFORMATION FROM THE SUPPORT DATABASE: VENDOR NAME, MODEL NAME, IDENTIFIER CORRESPONDING TO VENDOR AND MODEL, WEB PAGE NAME, AND INFORMATION NEEDED TO OBTAIN THE UNIQUE IDENTIFIER FROM THE WEB PAGE
2412
PLACE THE IDENTIFIER CORRESPONDING TO VENDOR AND MODEL, WEB PAGE NAME, AND INFORMATION NEEDED TO OBTAIN THE UNIQUE IDENTIFIER FROM THE WEB PAGE INTO THE struct CVendorModelID
2414
PLACE THE VENDOR NAME, MODEL NAME, AND THE struct CVendorModelID INTO THE MAP
2416

FIG. 24

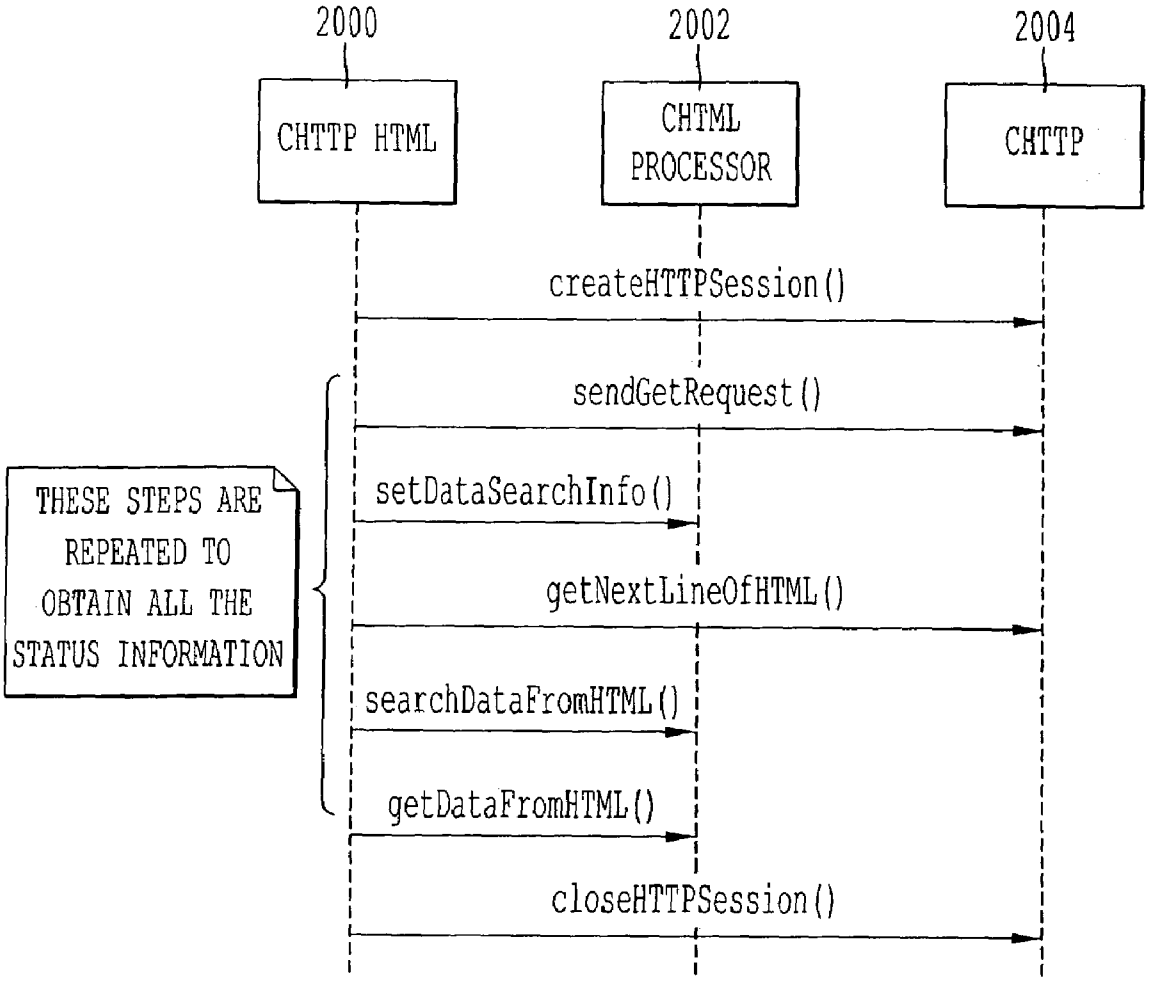
2000
2002
2004
CHTTP HTML
CHTML PROCESSOR
CHTTP
createHTTPSession()
sendGetRequest()
setDataSearchInfo()
getNextLineOfHTML()
searchDataFromHTML()
getDataFromHTML()
closeHTTPSession()
THESE STEPS ARE REPEATED TO OBTAIN ALL THE STATUS INFORMATION

FIG. 25

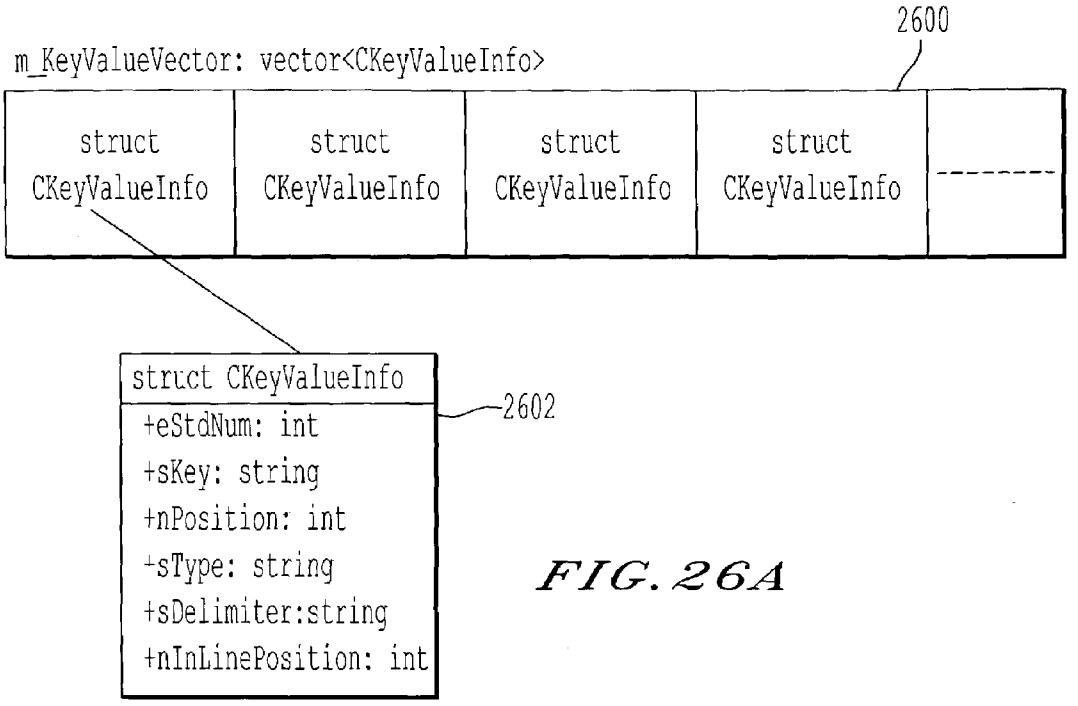

FIG. 26A

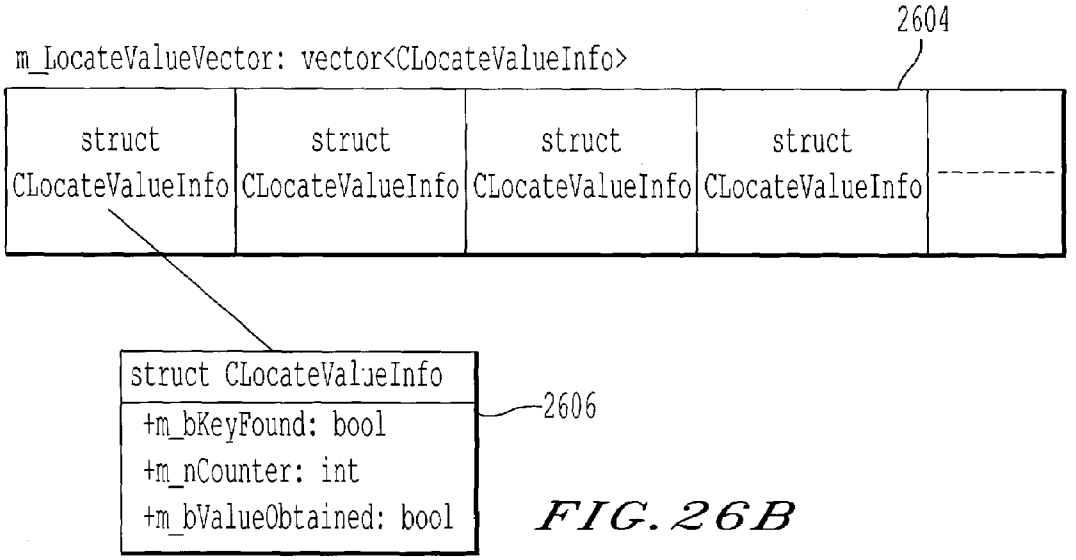

FIG. 26B

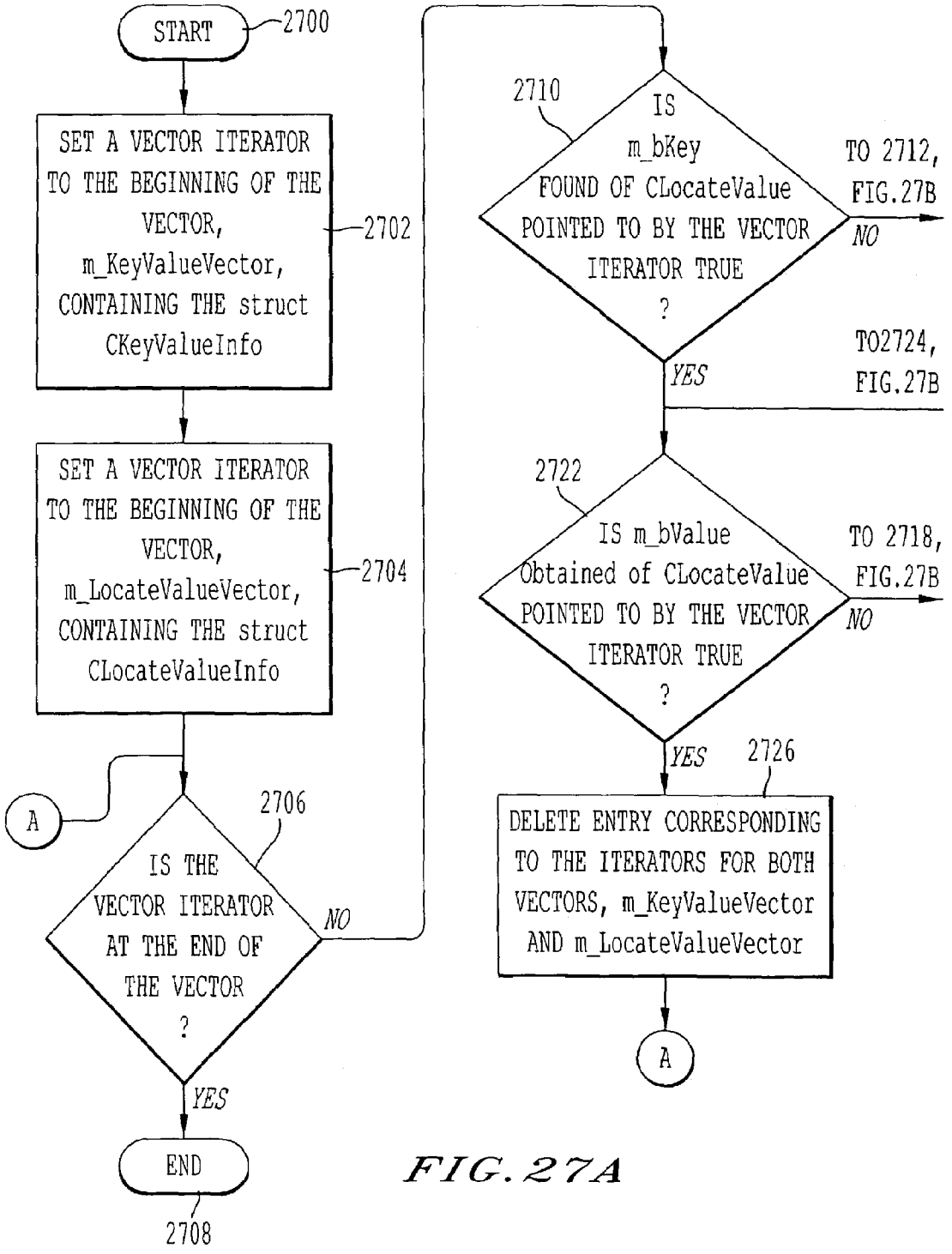
START
2700
SET A VECTOR ITERATOR TO THE BEGINNING OF THE VECTOR, m_KeyValueVector, CONTAINING THE struct CKeyValueInfo
2702
SET A VECTOR ITERATOR TO THE BEGINNING OF THE VECTOR, m_LocateValueVector, CONTAINING THE struct CLocateValueInfo
2704
A
2706
IS THE VECTOR ITERATOR AT THE END OF THE VECTOR ?
NO
YES
END
2708
2710
IS m_bKey FOUND OF CLocateValue POINTED TO BY THE VECTOR ITERATOR TRUE ?
TO 2712, FIG.27B
NO
YES
TO2724, FIG.27B
2722
IS m_bValue Obtained of CLocateValue POINTED TO BY THE VECTOR ITERATOR TRUE ?
TO 2718, FIG.27B
NO
YES
2726
DELETE ENTRY CORRESPONDING TO THE ITERATORS FOR BOTH VECTORS, m_KeyValueVector AND m_LocateValueVector
A

FIG. 27A

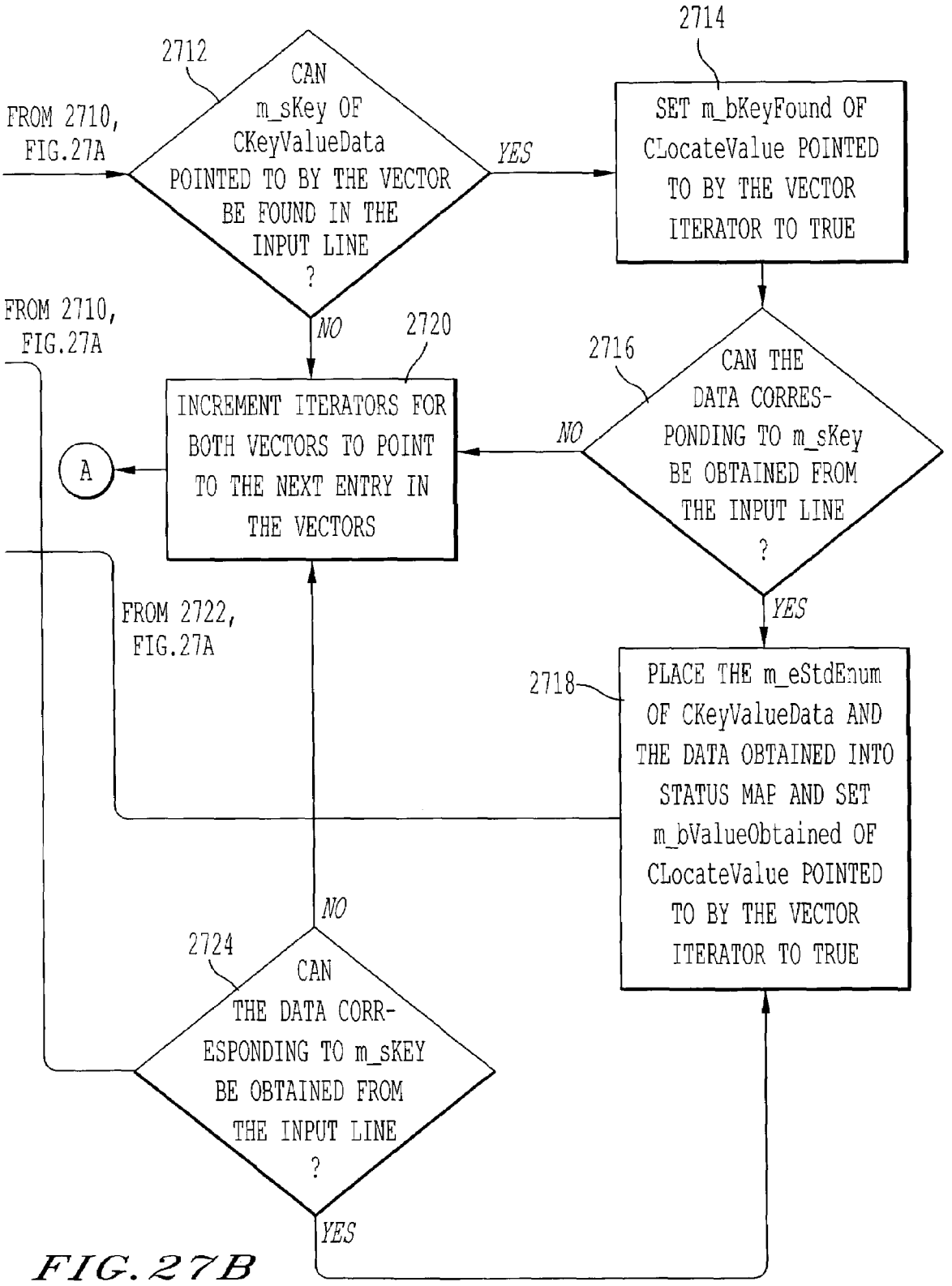
2712
CAN m_sKey OF CKeyValueData POINTED TO BY THE VECTOR BE FOUND IN THE INPUT LINE ?
FROM 2710, FIG.27A
YES
2714
SET m_bKeyFound OF CLocateValue POINTED TO BY THE VECTOR ITERATOR TO TRUE
NO
2720
INCREMENT ITERATORS FOR BOTH VECTORS TO POINT TO THE NEXT ENTRY IN THE VECTORS
A
FROM 2710, FIG.27A
2716
CAN THE DATA CORRESPONDING TO m_sKey BE OBTAINED FROM THE INPUT LINE ?
NO
YES
FROM 2722, FIG.27A
2718
PLACE THE m_eStdEnum OF CKeyValueData AND THE DATA OBTAINED INTO STATUS MAP AND SET m_bValueObtained OF CLocateValue POINTED TO BY THE VECTOR ITERATOR TO TRUE
NO
2724
CAN THE DATA CORRESPONDING TO m_sKEY BE OBTAINED FROM THE INPUT LINE ?
YES

FIG. 27B

m_KeyValueVector: vector<CKeyValueInfo>

2800

struct CKeyValueInfo	struct CKeyValueInfo	struct CKeyValueInfo
+eStdNum: 700	+eStdNum: 701	+eStdNum: 820
+sKey: Black	+sKey: Magenta	+sKey: Fuser Kit
+nPosition: 2	+nPosition: 2	+nPosition: 2
+sType: %	+sType: %	+sType: %
+sDelimiter: %	+sDelimiter: %	+sDelimiter: %
+nInLinePosition: 0	+nInLinePosition: 0	+nInLinePosition: 0

FIG. 28A

m_LocateValueVector: vector<CLocateValueInfo>

2802

struct CLocateValueInfo	struct CLocateValueInfo	struct CLocateValueInfo
+m_bKeyFound: false	+m_bKeyFound: false	+m_bKeyFound: false
+m_nCounter: 0	+m_nCounter: 0	+m_nCounter: 0
+m_bValueObtained: false	+m_bValueObtained: false	+m_bValueObtained: false

FIG. 28B

2804

```
line 1:<table cellSpacing="0" width=100%" border="0"><tr><td align="right" colSpan="3">
line 2:<font face="Helvetica,Arial,Gill Sans,Sans Serif" size="2">%of Life Remaining</font></td>
line 3:</tr><tr><td><font face="Helvetica,Arial,Gill Sans,Sans Serif" size="2">Black</font></td>
line 4:<td><table cellSpacing="0" cellPadding="0" width="100" border="1"><tbody><tr><td>
line 5:<table height="21" cellSpacing="0" cellPadding="0" width="100" border="0">
line 6:<tbody><tr><td bgColor="#000000"> </td></tr></tbody></table></td></tr></tbody></table>
line 7:</td><td align="right"><font face="Helvetica,Arial,Gill Sans,Sans Serif" size="2">100%</font></td>
line 8:</tr><tr><td><font face="Helvetica,Arial,Gill Sans,Sans Serif" size=2">Cyan</font></td>
line 9:<td><table cellSpacing="0" cellPadding="0" width="100" border="1"><tbody><tr><td>
line10:<table height="21" cellSpacing="0" cellPadding="0" width="100" border="0"><tbody><tr>
line11:<td bgColor="#00ffff"> </td></tr></tbody></table></td></tr></tbody></table></td>
line12:<td align="right"><font face="Helvetica,Arial,Gill Sans,Sans Serif" size="2">100%</font></td>
line13:</tr><tr><td><font face="Helvetica,Arial,Gill Sans, Sans Serif" size="2">Magenta</font></td
line14:<td><table cellSpacing="0" cellPadding="0" width="100" border="1"><tbody><tr><td>
line15:<table height="21" cellSpacing="0" cellPadding="0" width="100" border="0">
```

FIG. 28C

```
line16:<tbody><tr><td bgColor=#ff0ff" </td></tr></tbody></table></td></tr></tbody></table>
line17:</td><tc align="right"><font face="Helvetica,Arial,Gill Sans,Sans Serif" size="2">100%</font></td>
line18:</tr><tr><td><font face="Helvetica,Arial,Gill Sans,Sans Serif" size="2">Yellow</font></td>
line19:<td><table cellSpacing="0" cellPadding="0" width="100" border="1"><tbody><tr><td>
line20:<table height="21" cellSpacing="0" cellPadding="0" width="100" border="0"><tbody><tr>
line21:<td bgColor="#fff00" </td></tr></tbody></table></td></tr></tbody></table></td><td><align="right">
line22:<font face="Helvetica,Arial,Gill Sans,Sans Serif" size="2">100%</font></td></tr><tr>
line23:<td colSpan="3"><font size="1"> </font></td></tr><tr><td bgColor="#3366cc" colSpan="3"><b>
line24:<font face="Helvetica,Arial,Gill Sans,Sans Serif" color=#ffffff" size="2">Other Supplies Information
line25:</font></b></td></tr><tr><td><font face="Helvetica,Arial,Gill Sans,Sans Serif" size="2">Transfer Kit
line26:</font></td><td><table cellSpacing="0" cellPadding="0" width="100" border="1"><tbody><tr><td>
line27:<table height="21" cellSpacing="0" cellPadding="0" width="90" border="0"><tbody><tr>
line28:<td bgColor="#000000"> </td></tr></tbody></table></td></tr></tbody></table>
line29:</td><td align="right"><font face="Helvetica,Arial,Gill Sans,Sans Serif" size="2">90%</font></td>
line30:</tr></table>
```

FIG. 28D

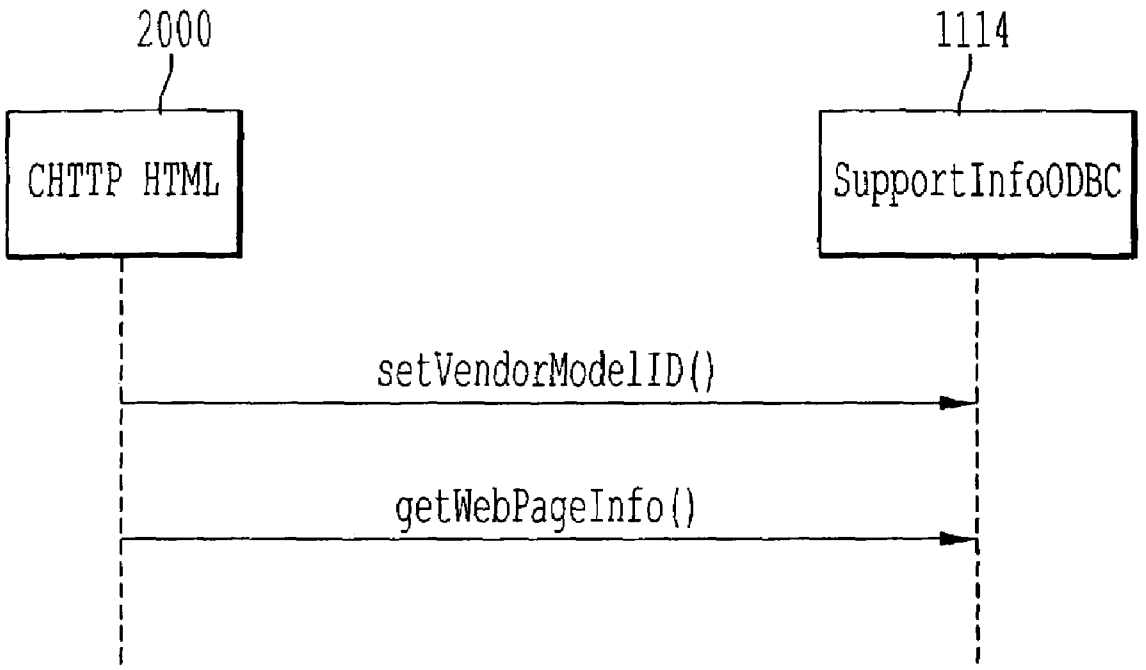
2000
1114
CHTTP HTML
SupportInfoODBC
setVendorModelID()
getWebPageInfo()

FIG. 29

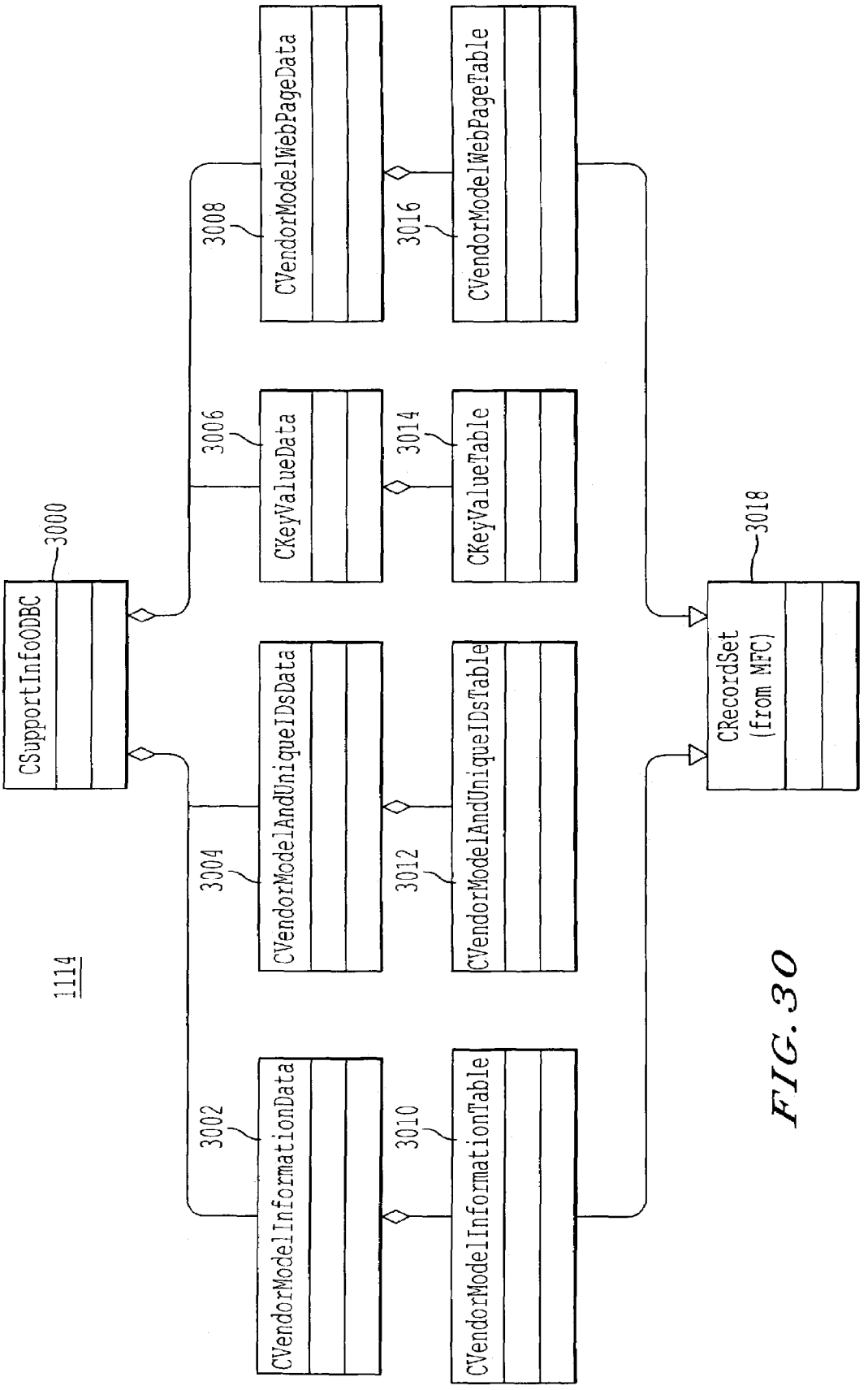
1114
CSupportInfoODBC
3000
CVendorModelInformationData
3002
CVendorModelAndUniqueIDsData
3004
CKeyValueData
3006
CVendorModelWebPageData
3008
CVendorModelInformationTable
3010
CVendorModelAndUniqueIDsTable
3012
CKeyValueTable
3014
CVendorModelWebPageTable
3016
CRecordSet
(from MFC)
3018

FIG. 30

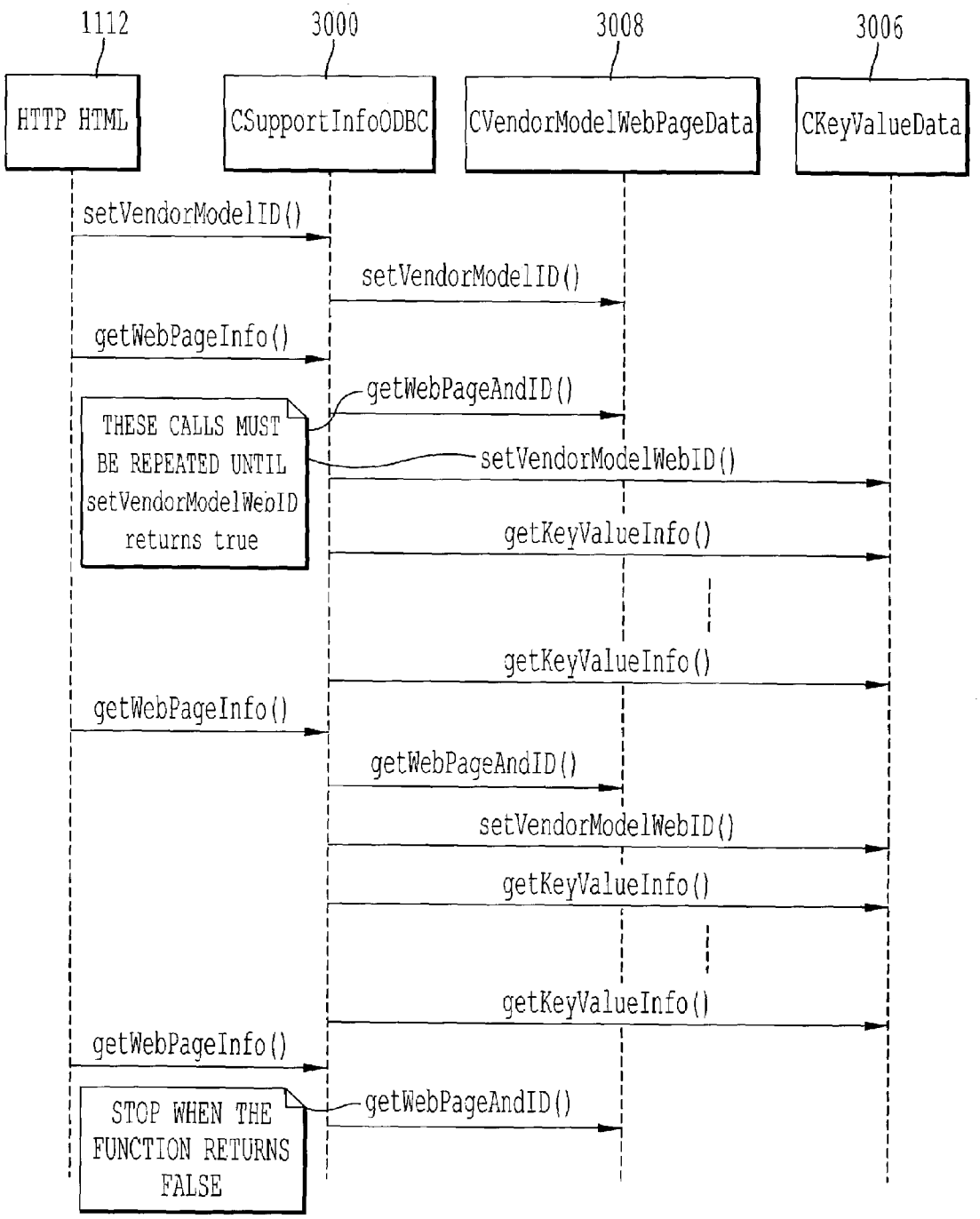
1112
3000
3008
3006
HTTP HTML
CSupportInfoODBC
CVendorModelWebPageData
CKeyValueData
setVendorModelID()
setVendorModelID()
getWebPageInfo()
getWebPageAndID()
THESE CALLS MUST BE REPEATED UNTIL setVendorModelWebID returns true
setVendorModelWebID()
getKeyValueInfo()
getKeyValueInfo()
getWebPageInfo()
getWebPageAndID()
setVendorModelWebID()
getKeyValueInfo()
getKeyValueInfo()
getWebPageInfo()
STOP WHEN THE FUNCTION RETURNS FALSE
getWebPageAndID()

FIG. 31

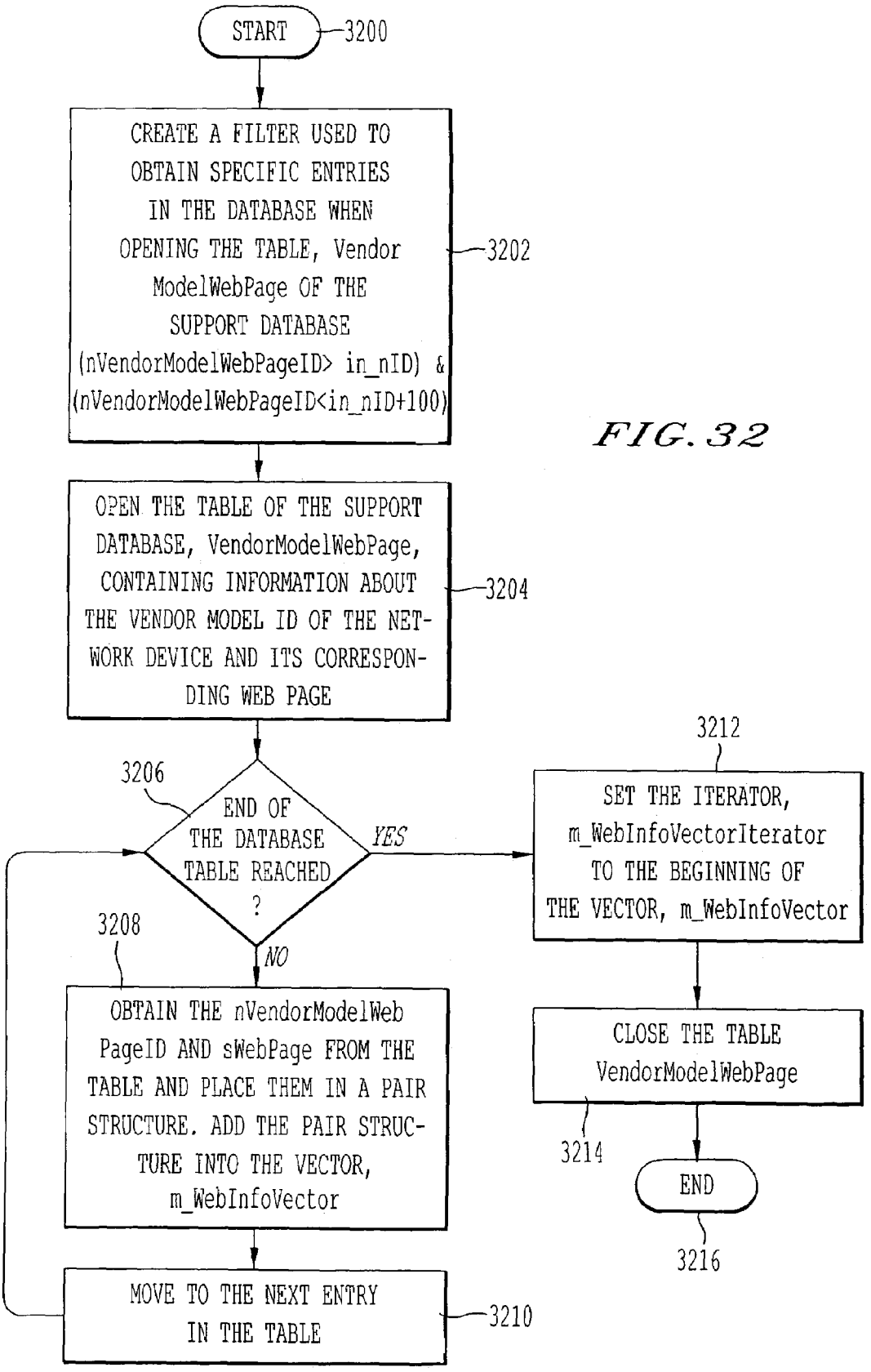
START
3200
CREATE A FILTER USED TO OBTAIN SPECIFIC ENTRIES IN THE DATABASE WHEN OPENING THE TABLE, Vendor ModelWebPage OF THE SUPPORT DATABASE (nVendorModelWebPageID> in_nID) & (nVendorModelWebPageID<in_nID+100)
3202
OPEN THE TABLE OF THE SUPPORT DATABASE, VendorModelWebPage, CONTAINING INFORMATION ABOUT THE VENDOR MODEL ID OF THE NETWORK DEVICE AND ITS CORRESPONDING WEB PAGE
3204
3206
END OF THE DATABASE TABLE REACHED ?
YES
NO
3208
OBTAIN THE nVendorModelWeb PageID AND sWebPage FROM THE TABLE AND PLACE THEM IN A PAIR STRUCTURE. ADD THE PAIR STRUCTURE INTO THE VECTOR, m_WebInfoVector
MOVE TO THE NEXT ENTRY IN THE TABLE
3210
3212
SET THE ITERATOR, m_WebInfoVectorIterator TO THE BEGINNING OF THE VECTOR, m_WebInfoVector
CLOSE THE TABLE VendorModelWebPage
3214
END
3216

FIG. 32

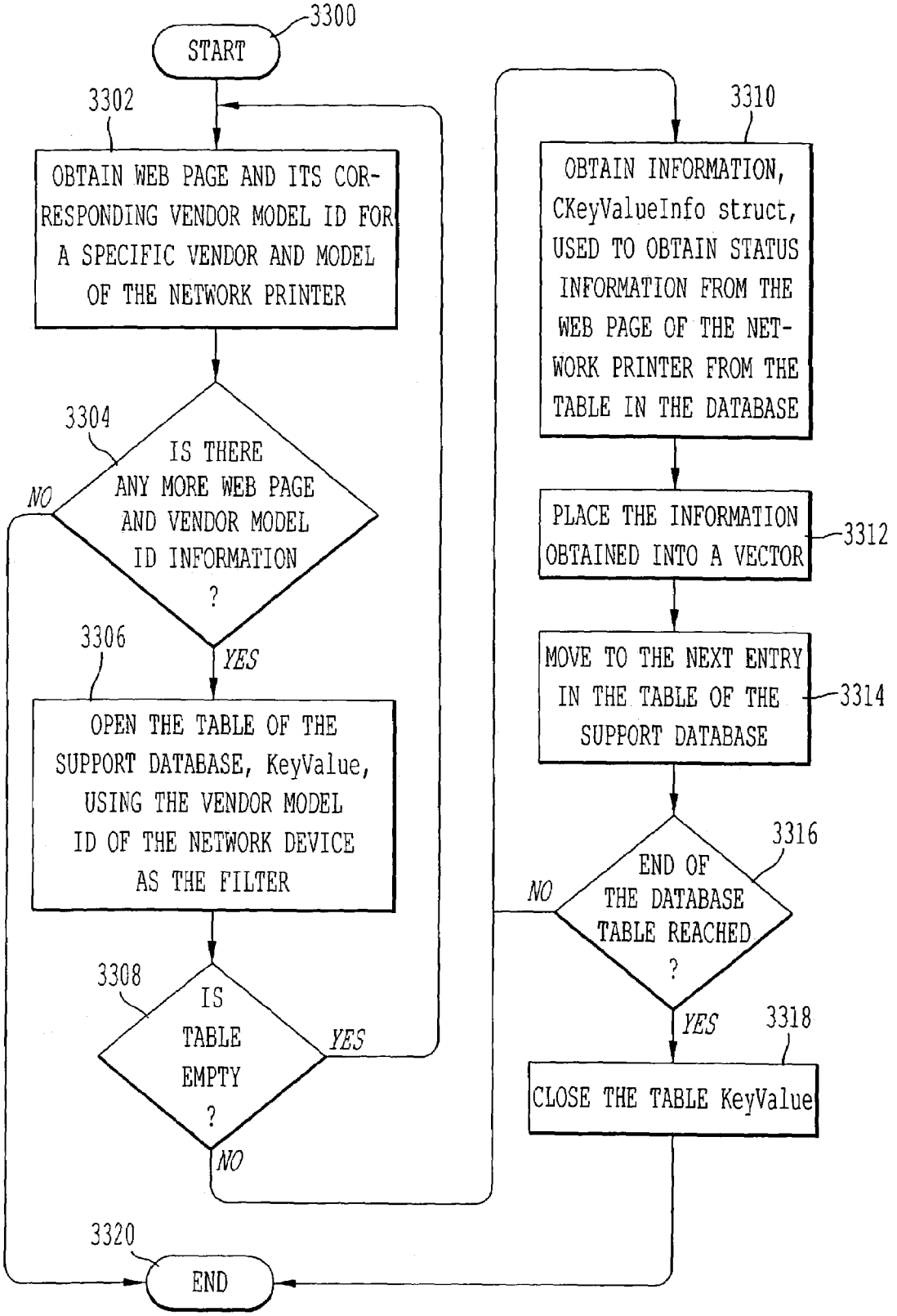
3300
START
3302
OBTAIN WEB PAGE AND ITS CORRESPONDING VENDOR MODEL ID FOR A SPECIFIC VENDOR AND MODEL OF THE NETWORK PRINTER
3304
IS THERE ANY MORE WEB PAGE AND VENDOR MODEL ID INFORMATION ?
NO
YES
3306
OPEN THE TABLE OF THE SUPPORT DATABASE, KeyValue, USING THE VENDOR MODEL ID OF THE NETWORK DEVICE AS THE FILTER
3308
IS TABLE EMPTY ?
YES
NO
3310
OBTAIN INFORMATION, CKeyValueInfo struct, USED TO OBTAIN STATUS INFORMATION FROM THE WEB PAGE OF THE NETWORK PRINTER FROM THE TABLE IN THE DATABASE
PLACE THE INFORMATION OBTAINED INTO A VECTOR
3312
MOVE TO THE NEXT ENTRY IN THE TABLE OF THE SUPPORT DATABASE
3314
3316
END OF THE DATABASE TABLE REACHED ?
NO
YES
3318
CLOSE THE TABLE KeyValue
3320
END

FIG. 33

METHOD AND SYSTEM FOR USING DATA STRUCTURES TO STORE DATABASE INFORMATION FOR MULTIPLE VENDORS AND MODEL SUPPORT FOR REMOTELY MONITORED DEVICES

CROSS-REFERENCE TO RELATED APPLICATIONS

This application is related to commonly owned co pending U.S. Patent Application Ser. No. 60/359,648 filed Feb. 27, 2002 entitled "Architecture of The Remote Monitoring of Devices Through the Local Monitoring Station and Sending to the Central Station in Which the Multiple Vendors are Supported" which is incorporated herein by reference in its entirety. This application is related to the following commonly owned co pending Applications: U.S. patent application Ser. No. 10/225,290 filed Aug. 22, 2002, entitled "Method and System for Monitoring Network Connected Devices with Multiple Protocols"; U.S. patent application Ser. No. 10/068,861, filed Feb. 11, 2002, entitled "Method and Apparatus Utilizing Communication Means Hierarchy to Configure or Monitor an Interface Device"; U.S. patent application Ser. No. 10/142,989, filed May 13, 2002, entitled "Verification Scheme for Email Message Containing Information About Remotely Monitored Devices"; U.S. patent application Ser. No. 09/756,120, filed Jan. 9, 2001, entitled "Method and System of Remote Support of Device Using Email"; U.S. Patent Application entitled "Method and Apparatus for Modifying Remote Devices monitored by a Monitoring System", filed May 31, 2002; U.S. patent application Ser. No. 09/975,935, filed Oct. 15, 2001, entitled "Method and System for Remote Support of Device Using Email Based Upon Pop3 With Decryption Capability Through Virtual Function"; U.S. patent application Ser. No. 09/953,358, filed Sep. 17, 2001, entitled "Method and System of Remote Support of Device Using Email Through Data Transfer Module"; U.S. patent application Ser. No. 10/162,402, filed Jun. 5, 2002, entitled "Method and System to Use HTTP and Html/xml for Monitoring the Devices"; U.S. patent application Ser. No. 10/157,903 filed May 31, 2002, entitled "Method for Scrambling Information about Network Devices That is Placed in Email Message"; U.S. patent application Ser. No. 10/162,402, filed Jun. 5, 2002, entitled "Method and System to Use Http and Html/xml for Monitoring the Devices"; U.S. patent application Ser. No. 09/921,707, filed Aug. 6, 2001, entitled "Universal Controller in The Wireless Networked Environment"; and U.S. patent application Ser. No. 09/953,359, filed Sep. 17, 2001, entitled "System, Method, and Computer Program Product for Sending Remote Device Configuration Information to a Monitor Using E-Mail"; U.S. Patent Application filed concurrently herewith and entitled "Method and system for using vectors of data structures for extracting information from web pages of remotely monitored devices"; and U.S. Patent Application filed concurrently herewith and entitled "method and system for using internal data structures for storing information related to remotely monitored devices", the disclosures of all the above applications are incorporated herein by reference in their entirety.

BACKGROUND OF THE INVENTION

1. Field of the Invention

This invention relates to monitoring devices connected to a network. More particularly, it relates to a method and system for obtaining and maintaining information pertaining to vendors and models of monitored devices supported by a monitoring system.

2. Discussion of Related Art

As is generally known, computer systems include hardware and software. Software includes a list of instructions that are created to operate and manage hardware components that make up a computer system. Typically, computer systems include a variety of hardware components/devices that interface with one another. The computer system can be a standalone type or a networked type. In a networked typed computer system, a plurality of distinct devices are connected to a network and thus communication between these distinct devices is enabled via the network.

Also, software for operating the hardware devices needs to be configured in order to allow communication between the hardware devices so that the hardware devices are enabled to function cooperatively. Further, in order to facilitate such a communication, it is also desirable for hardware devices to be monitored and the status of each hardware device identified in order to ensure that each hardware device is functioning in an efficient manner.

For the purposes of this patent application, the inventor has determined that a hardware device that is configuring or monitoring the plurality of distinct devices or hardware devices would be referred to as a monitoring device and the hardware devices that are being monitored by the monitoring device would be referred to as "monitored devices".

For hardware devices that are located on a network, it is desirable for these devices to be monitored for maintenance, usage, or other purposes. However, in view of manufacturer differences relating to hardware devices and interfaces, it may be difficult for a monitoring device to communicate with various other devices connected to a network. Such a disadvantage most likely prevents network administrators from obtaining crucial information about the performance and efficiency of the devices connected to the network.

The Simple Network Management Protocol (SNMP) is today a de-facto industry standard for monitoring and management of devices on data communication networks, telecommunication systems and other globally reachable devices. Practically every organization dealing with computers and related devices expects to be able to centrally monitor, diagnose and configure each such device across local and wide area networks. SNMP is the protocol that enables this interaction.

In order for a device to respond to SNMP requests it is desirable to equip the device with the software that enables it to properly interpret an SNMP request, perform the actions required by that request and produce an SNMP reply. The SNMP agent software is typically a subsystem software module residing in a network-entity.

The collection of objects implemented by a system is generally referred to as a Management Information Base (MIB). An MIB may also be a database with information related to the monitoring of devices. Examples of other MIB's include Ethernet MIB, which focuses on Ethernet interfaces; Bridge MIB, which defines objects for the management of 802.1D bridges, to name a few.

Using SNMP for monitoring devices is difficult as private MIB's include values that are hard to decipher without a valid key. A company using SNMP for monitoring various devices, connected to its network, creates a unique identifier/key that is maintained as proprietary information of the company. For most part, the results are displayed as binary or integer values. Thus, using SNMP, results received from the devices that are

being monitored ("monitored devices"), fail to provide a user the status of the monitored devices in a user comprehensible manner.

Further, using SNMP, it is difficult for one to obtain detailed information about a monitored device without a valid key or access to a private MIB to decipher the results obtained as binary or integer values.

BRIEF SUMMARY OF THE INVENTION

The system and method of the present invention addresses a solution to the above-identified problems by enabling monitoring of devices that are connected to a network, and obtaining and maintaining information related to monitored devices that are supported by a monitoring system.

Information about vendors and models supported by the monitoring system are stored in a database. Using the database to determine the vendors and models supported by the monitoring system allows flexibility in changing the supported vendors and models without actually changing the underlying code. Efficiency of the monitoring system is improved by eliminating multiple accesses of the database in order to determine if each of the monitored devices are supported by the monitoring system. By facilitating retrieval of all the information about the vendors and models of monitored devices supported by the monitoring system by performing minimum number of accesses of the database, and preferably, retrieving the desired information in a single access of the database, the efficiency of the monitoring system is improved. The retrieved information is stored in data structures of a database supported by the monitoring system. A Hypertext Transfer Protocol (HTTP) may be used to access information from the monitored devices.

One aspect of this invention provides in a communication system having one or more monitored devices communicatively coupled to a monitoring system, a database having information related to the one or more monitored devices, a method of obtaining and maintaining, in the monitoring system, information related to the monitored devices comprising a) enabling the monitoring system to access the database in order to retrieve information related to the monitored devices; b) populating a first data structure with information retrieved from the database; c) determining if a monitored device is supported by the monitoring system using information from the database; and d) establishing communication with the monitored device in order to obtain status information of the monitored device if the monitored device is determined to be supported by the monitoring system.

In another aspect, the present invention provides a method of obtaining and maintaining information about one or more monitored devices in a monitoring system, comprising a) storing vendor information and vendor model information related to the monitored devices in a database; b) enabling a monitoring system to access the database in order to retrieve the stored vendor information and vendor model information; c) populating a first data structure with vendor information retrieved from the database; d) populating a second data structure with vendor model information if no further vendor information remains to be populated in the first data structure; e) determining if a monitored device is supported by the monitoring system using information from the database; and f) establishing communication with the monitored device to obtain status information of a monitored device if the monitored device is determined to be supported by the monitoring system.

The present invention also identifies various vendors of monitored devices and the device models that are supported by the monitoring system as described herein. Since various vendors of the monitored devices present information about a monitored device in a vendor-specific manner, the present invention enables identifying the vendor and model of the monitored device to determine the operational status of the monitored device.

BRIEF DESCRIPTION OF THE DRAWINGS

A more complete appreciation of the invention and many of the attendant advantages thereof will be readily obtained as the same becomes better understood by reference of the following detailed description when considered in connection with the accompanying drawings, wherein:

FIG. **1** illustrates three networked business office devices connected to a network of computers and databases through the Internet;

FIG. **2** illustrates the components of a digital image forming apparatus;

FIG. **3** illustrates the electronic components of the digital image forming apparatus illustrated in FIG. **2**;

FIG. **4** illustrates details of a multi-port communication interface illustrated in FIG. **3**;

FIG. **5** illustrates an alternative system configuration in which business office devices are either connected directly to the network or connected to a computer which is connected to the network;

FIG. **6**A is a block diagram illustrating a flow of information to and from an application unit using electronic mail;

FIG. **6**B illustrates an alternative way of communicating using electronic mail in which a computer that is connected to the application unit also serves as a Message Transfer Agent (MTA);

FIG. **6**C illustrates an alternative way of communicating using electronic mail in which an application unit includes a message transfer agent for exchanging electronic mail;

FIG. **6**D illustrates an alternative way of communicating using electronic mail in which a mail server acts as a POP3 server to receive mail for an appliance/device and as an Simple Mail Transfer Protocol (SMTP) server to send mail for the appliance/device;

FIG. **7** illustrates an alternative manner of sending messages across the Internet;

FIG. **8** illustrates an exemplary computer which may be connected to an appliance/device and used to communicate electronic mail messages;

FIG. **9**A is a schematic representation of the overall system in accordance with an exemplary embodiment of the present invention;

FIG. **9**B illustrates an exemplary web page interface for a monitored device in accordance with an exemplary embodiment of the present invention;

FIG. **10** illustrates modules used in the monitoring of the data and their interface functions in accordance with an exemplary embodiment of the present invention;

FIG. **11** shows details within the Monitor module and their calling functions between the sub-modules;

FIG. **12** shows a data structure used by HTTP_HTML submodule and SupportInfoODBC sub-module as illustrated in FIG. **11** of the present invention;

FIG. **13** shows the sequence of the init function of Monitor module **1006** illustrated in FIG. **10** of the present invention;

FIG. **14** illustrates an exemplary map data structure used by HTTP_HTML sub-module as illustrated in FIG. **11** of the present invention;

FIG. **15** shows a vector of the reference to the devices created by DeviceFactory and used by the MonitorManager as illustrated in FIG. **13** of the present invention;

FIG. **16** shows a sequence of the monitorStatus function as illustrated in FIG. **10**;

FIGS. **17**A-**17**C show table relationship stored in a database to support information collection through the HTTP;

FIG. **18** shows another embodiment of the present invention where multiple protocols are used to collect information from a plurality of monitored devices.

FIG. **19** shows a schematic for e-mailing information about monitored devices to a desired party;

FIG. **20** shows a class diagram for the HTTP_HTML package as shown in FIG. **11**;

FIG. **21** shows a sequence diagram for executing the init( ) function of CHTTP_HTML as shown in FIG. **20**;

FIG. **22** shows a vector used by the class CHTTP_HTML as shown in FIG. **20**;

FIG. **23** shows a map used by the class CHTTP_HTML as shown in FIG. **20** to store information about a vendor, model, vendor model ID, and information used to obtain a unique identifier of a monitored device from its web page;

FIG. **24** shows a flow chart for executing the init( ) function of CHTTP_HTML as shown in FIG. **20**;

FIG. **25** shows a sequence diagram for executing the getStatus( ) function of CHTTP_HTML as shown in FIG. **20**;

FIG. **26** shows vectors used by the class CHTMLProcessor as shown in FIG. **20** to obtain information from a web page of a monitored device;

FIG. **27** shows a flow chart for executing the searchDataFromHTML( ) function of CHTMLProcessor as shown in FIG. **20**;

FIG. **28** shows an exemplary schematic of two vectors m_KeyValueVector and m_LocateValueVector and lines from a web page of a monitored device;

FIG. **29** shows a sequence diagram for executing the getVendorModelID( ) function of CHTTP_HTML as shown in FIG. **20**;

FIG. **30** shows the class diagram of the SupportInfoODBC package as shown in FIG. **11**;

FIG. **31** shows the sequence diagram for executing the getVendorModelID( ) function of the HTTP_HTML package as shown in FIG. **20**;

FIG. **32** shows a flow chart for executing the setVendorModelID( ) of the CSupportInfoODBC shown in FIG. **31**; and

FIG. **33** shows a flow chart for executing the getWebPageInfo( ) of CSupportInfoODBC shown in FIG. **31**.

DETAILED DESCRIPTION OF EXEMPLARY EMBODIMENTS

FIG. **1** illustrates a schematic having various devices and computers for monitoring, diagnosing and controlling the operation of the devices. Specifically, FIG. **1** includes a first network **16**, such as a Local Area Network (LAN) connected to computer workstations **17**, **18**, **20** and **22**. The workstations can be any type of computers including, e.g., IBM Personal Computer compatible devices, Unix-based computers, Linux-based computers or Apple Macintoshes. Also connected to the network **16** are a digital image forming apparatus **24**, a facsimile machine **28**, and a printer **32**. As would be appreciated by one of ordinary skill in the art, two or more of the components of the digital image forming apparatus **24** and the facsimile machine **28** can be combined into a unified "image forming apparatus." For example, the image forming apparatus **24**, facsimile machine **28**, and printer **32** and the workstations **17**, **18**, **20** and **22** may be referred to as machines or monitored devices. In some configurations, one or more workstations may be converted to business office appliances.

One example of such a business office appliance is eCabinet® from Ricoh Corporation. Also, a facsimile server (not illustrated) may be connected to the network **16** and have a telephone, Integrated Services Digital Network (ISDN), cable or wireless connection. Each of the digital image forming apparatus **24**, facsimile machine **28**, and printer **32** in addition to being connected to the network **16**, may also include conventional telephone and/or ISDN and/or cable and/or wireless connections **26**, **30** and **34**, respectively. As explained below, the monitored devices **24**, **28** and **32**, respectively, communicate with a remote monitoring, diagnosis, and control station, also referred to as a monitoring device, through, for example, the Internet via the network **16** or by a direct telephone, ISDN, wireless, or cable connection.

In another exemplary business environment, monitored devices may include such devices as multi-function imaging device, scanner, projector, conferencing system and shredder. In another application, the network **16** may be a home network where monitored devices are meters (electricity, gas, water) and appliances such as, for example, microwave oven, washer, dryer, dishwasher, home entertainment system, refrigerator, rice cooker, heater, air condition, water heater, security camera.

In FIG. **1**, a wide area network (WAN) (e.g., the Internet or its successor) is generally designated by **10**. The WAN **10** can be either a private WAN, a public WAN or a hybrid type. The WAN **10** includes a plurality of interconnected computers and routers designated by **12**A-**12**I. The manner of communicating over a WAN is known through a series of Request for Comments (RFC) documents available from the Internet Engineering Task Force (IETF) at http://www.ietf.org/rfc.html, including RFC 821 entitled "Simple Mail Transfer Protocol"; RFC 822 entitled "Standard for the Format of ARPA Internet Text Message"; RFC 959 entitled "File Transfer Protocol (FTP)"; RFC 2045 entitled "Multipurpose Internet Mail Extensions (MIME) Part One: Format of Internet Message Bodies"; RFC 1894 entitled "An Extensible Message Format for Delivery Status Notifications"; RFC 1939 entitled "Post Office protocol—Version 3"; RFC 2068 "Hypertext Transfer Protocol—HTTP/1.1"; and RFC 2298 entitled "An Extensible Message Format for Message Disposition Notifications." The contents of each of these references are incorporated herein by reference.

Transmission Control Protocol/Internet Protocol (TCP/IP) related communication is described, for example, in the book "TCP/IP Illustrated," Vol. 1, The Protocols, by W. R. Stevens, from Addison-Wesley Publishing Company, 1994, the entire contents of which is incorporated herein by reference. Volumes 1-3 of "Internetworking with TCP/IP" by Comer and Stevens are also incorporated herein by reference in their entirety.

Continuing to refer to FIG. **1**, a firewall **50**A is connected between the WAN **10** and the network **16**. A firewall is a device that allows only authorized computers on one side of the firewall to access a network, computers or individual parts on the other side of the firewall. Firewalls are known and commercially available devices and/or software (e.g., ZoneAlarm from Zone Labs). Similarly, firewalls **50**B and **50**C separate the WAN **10** from a network **52** and a workstation **42**, respectively. Additional details on firewalls can be found in "Firewalls and Internet Security" by W. R. Cheswick, and S. M. Bellovin, 1994, AddisonWesley Publishing, and "Building Internet Firewalls" by D. B. Chapman

and E. D. Zwicky, 1995, O'Reilly & Associates, Inc. The entire contents of those two references are incorporated herein by reference.

The network **52** is a conventional network and includes a plurality of workstations **56**, **62**, **68** and **74**. These workstations may be distributively located within different departments (e.g., marketing, manufacturing, design engineering, and customer service departments) within a single company. In addition to the workstations connected via the network **52**, a workstation **42** is not directly connected to the network **52** is also provided. Information in a database stored in a disk **46** connected to the workstation **42** may be shared using proper encryption and protocols over the WAN **10** to the workstations connected directly to the network **52**. Also, the workstation **42** includes a direct connection to a telephone line and/or an ISDN and/or a cable network and/or a wireless network **44**, and the database in disk **46** may be accessed through the telephone line, the ISDN, the cable network or via the wireless network **44**. The cable network used by this invention may be implemented using a cable network that is typically used to carry television programming, a cable that provides for high-speed communication of digital data typically used with computers or the like, or any other desired type of cable.

In another embodiment, the workstation **42** can be a laptop computer, a PDA, a palm top computer or a cellular phone with network capability. These devices may be used to access information stored in the database stored in the disk **46**.

Information related to the business office machines, business devices or business office appliances **24**, **28** and **32**, respectively, may be stored in one or more of the databases stored in the disks **46**, **54**, **58**, **64**, **70** and **76**. Known databases include (1) SQL databases by Microsoft, IBM, Oracle and Sybase (2) other relational databases, and (3) non-relational databases (including object oriented databases from Objectivity, JYD Software Engineering, and Orient Technologies). Each of the customer service, marketing, manufacturing, and engineering departments may have their own database or may share one or more databases. Each of the disks used to store databases is a non-volatile memory such as a hard disk or optical disk. Alternatively, the databases may be stored in any storage device including solid state and/or semiconductor memory devices. For example, disk **64** may be stored with a marketing database, disk **58** may be stored with a manufacturing database, disk **70** may be stored with an engineering database, and disk **76** may be stored with a customer service database. Alternatively, the disks **54** and **46** maybe stored with one or more of the databases.

In addition to the workstations **56**, **62**, **68**, **74** and **42** being connected to the WAN **10**, these workstations may also include a connection to a telephone line, ISDN, cable, or wireless networks for providing a secure connection to a machine/device being monitored, diagnosed and/or controlled. Additionally, if one of the communication media is not operating properly, one of the others may be automatically used, as a backup, for communication.

A feature of the present invention is the use of a "store-and-forward" mode of communication (e.g., Internet electronic mail, also referred to herein as e-mail) or transmission between a machine and a computer/monitoring system for diagnosing and controlling the machine. Alternatively, the message which is transmitted may be implemented using a mode of communication that makes direct, end-to-end connections (e.g., using a socket connection to the ultimate destination) such as FTP and Hyper Text Transfer Protocol (HTTP).

FIG. **2** illustrates the mechanical layout of the digital image forming apparatus **24** illustrated in FIG. **1**. In FIG. **2**, **101** is a fan for the scanner, **102** is a polygonal mirror used with a laser printer, and **103** designates an F Θ lens used to collimate light from a laser (not illustrated). Reference numeral **104** designates a sensor for detecting light from the scanner. Reference numeral **105** designates a lens for focusing light from the scanner onto the sensor **104**, and reference numeral **106** designates a quenching lamp used to erase images on the photoconductive drum **132**. There is a charging corona unit **107** and a developing roller **108**. Reference numeral **109** designates a lamp used to illustrate a document to be scanned and **110**, **111**, and **112** designate mirrors for reflecting light onto the sensor **104**. A drum mirror **113** is provided to reflect light to the photoconductive drum **132** originating from the polygon mirror **102**. A fan **114** is used to cool the charging area of the digital image forming apparatus, and a first paper feed roller **115** is used for feeding paper from the first paper cassette **117**, and a reference numeral **116** designates a manual feed table. Similarly, a second feed paper feed roller **118** is used in conjunction with the second cassette **119**. Reference numeral **120** designates a relay roller, **121** designates a registration roller, **122** designates an image density sensor, and **123** designates a transfer/separation corona unit. Reference numeral **124** designates a cleaning unit, **125** designates a vacuum fan, **126** designates a transport belt, **127** designates a pressure roller; and **128** designates an exit roller. A hot roller **129** is used to fix toner onto the paper, **130** designates an exhaust fan, and a main motor **131** is used to drive the digital image forming apparatus **24**.

FIG. **3** is a block diagram illustrating the electronic components of the digital image forming apparatus **24** of FIG. **2**, wherein CPU **160** is a microprocessor which acts as a controller of the apparatus. Random access memory (RAM) **162** stores dynamically changing information including operating parameters of the digital image forming apparatus **24**. A non-volatile memory (e.g., a read only memory (ROM) **164** or a Flash Memory) stores program code used to run the digital image forming apparatus as well as static-state data, describing the image forming apparatus **24** (e.g., the model number, serial number of the copier, and default parameters).

A multi-port network interface **166** is provided to enable the digital image forming apparatus **24** to communicate with external devices through at least one communication network. Reference number **168** represents a telephone, ISDN, or cable line, and numeral **170** represents another type of network different from the network identified at **168**. Additional details of the multi-port network interface are set forth with respect to FIG. **5**. An interface controller **172** is used to connect an operation panel **174** to a system bus **186**. The operation panel **174** includes standard input and output devices found on a digital image forming apparatus **24** including a copy button, keys to control the operation of the image forming apparatus such as, for example, number of copies, reduction/enlargement, darkness/lightness, etc. Additionally, a liquid crystal display may be included within the operation panel **174** to display parameters and messages of the digital image forming apparatus **24** to a user.

A local connection interface **171** is a connection through local ports such as RS232, the parallel printer port, USB, and IEEE 1394. FireWire (IEEE 1394) is described in Wickelgren, I., "The Facts About "FireWire", IEEE Spectrum, April 1997, Vol. 34, Number 4, pp. 19-25, the entire contents of which are incorporated herein by reference. Preferably, a "reliable" communication protocol is used which includes error detection and retransmission.

A storage interface **176** connects storage devices to the system bus **186**. For example, the storage devices include a flash memory **178**, which can be substituted by a conventional Electrically Erasable Programmable Read Only Memory (EEPROM), and a disk **182**. The disk **182** may be a hard disk, optical disk, and/or a floppy disk drive. Additional memory devices may be connected to the digital image forming apparatus **24** via connection **180**. The flash memory **178** is used to store semi-static state data which describes parameters of the digital image forming apparatus **24** which infrequently change over the life of the apparatus **24**. Such parameters include, for example, the options and configuration of the digital image forming apparatus. An option interface **184** allows additional hardware such as an external interface to be connected to the digital image forming apparatus **24**. A clock/timer **187** is utilized to keep track of both the time and date and also to measure elapsed time.

FIG. **3** also illustrates the various sections making up the digital image forming apparatus **24**. Reference numeral **202** designates a sorter and contains sensors and actuators that are used to sort the output of the digital image forming apparatus **24**. A duplexer **200** allows performance of a duplex operation. The duplexer **200** includes conventional sensors and actuators. A large capacity tray unit **198** is provided for allowing paper trays holding a large number of sheets. As with the duplexer **200**, the tray unit **198** includes conventional sensors and actuators as well.

A paper feed controller **196** is used to control the operation of feeding paper into and through the digital image forming device. A scanner **194** is used to scan images into the digital image forming device-and includes conventional scanning elements such as a light, mirror, etc. Additionally, scanner sensors are used such as a home position sensor to determine that the scanner is in the home position, and a lamp thermistor is used to ensure proper operation of the scanning lamp. A printer/imager **192** prints the output of the digital image forming device, and includes a conventional laser printing mechanism, a toner sensor, and an image density sensor. The fuser **190** is used to fuse the toner onto the page using a high temperature roller and includes an exit sensor, a thermistor to assure that the fuser **190** is not overheating, and an oil sensor. Additionally, there is an optional unit interface **188** used to connect to optional elements of the digital image forming device such as an automatic document feeder, a different type of sorter/collator, or other elements which can be added to the digital image forming device.

FIG. **4** illustrates details of the multi-port network interface **166**. The digital image forming device may communicate to external devices through a token ring interface **220**, a cable modem unit **222**, which has a high speed connection over cable, a conventional telephone interface **224**, which connects to a telephone line **168**A, an ISDN interface **226**, which connects to an ISDN line **168**B, a wireless interface **228**, or an ethernet interface **230**, which connects to a LAN **170**. Other interfaces may include, but are not limited to, a Digital Subscriber Line (DSL) (original DSL, concentric DSL, and asymmetric DSL). A single device which connects to both a Local Area Network and a telephone line is commercially available from Intel and is known as Intel Pro 10/100+Modem.

The CPU or other microprocessor or circuitry executes a monitoring process to monitor the state of each of the sensors of the digital image forming device, and a sequencing process is used to execute the instructions of the code used to control and operate the digital image forming device. Additionally, there is (1) a central system control process executed to control the overall operation of the digital image forming device, and (2) a communication process used to assure reliable communication to external devices connected to the digital image forming device. The system control process monitors and controls data storage in a static state memory (e.g., the ROM **164** of FIG. **3**), a semi-static memory (e.g., the flash memory **178** or disk **182**), or the dynamic state memory (e.g., a volatile or non-volatile memory (e.g., the RAM **162** or the flash memory **178** or disk **182**). Additionally, the static state memory may be a device other than the ROM **164** such as a non-volatile memory including either of the flash memory **178** or disk **182**.

The above details have been described with respect to a digital image forming device, but the present invention is equally applicable to other business office machines or devices such as an analog copier, a facsimile machine, a scanner, a printer, a facsimile server, projector, conferencing equipment, shredder, or other business office machines, a business office appliance, or other appliances (e.g., a microwave oven, VCR, digital camera, cellular phone, palm top computer). Additionally, the present invention includes other types of devices which operate using store-and-forward or direct connection-based communication. Such devices include metering systems (including gas, water, or electricity metering systems), vending machines, or any mechanical device (e.g., automobiles) that needs to be monitored during operation or remote diagnosis. In addition to monitoring special purpose machines and computers, the invention can be used to monitor, control, and diagnose a general purpose computer that would be the monitored and/or controlled device.

FIG. **5** illustrates an alternative system diagram of the present invention in which different devices and subsystems are connected to the WAN **10**. However, there is no requirement to have each of these devices or subsystems as part of the invention. Each component or subsystem illustrated in FIG. **5** is individually part of the invention. Further, the elements illustrated in FIG. **1** may be connected to the WAN **10** which is illustrated in FIG. **5**. In FIG. **5**, there is illustrated a firewall **50-1** connected to an intranet **260-1**. A service machine **254** connected to the intranet **260-1** includes therein, or has connected thereto, data **256** that may be stored in a database format. The data **256** includes history, performance, malfunction, and any other information such as statistical information of the operation or failure or set-up of the monitored devices, or configuration information such as which components or optional equipment is included with the monitored devices. The service machine **254** may be implemented as the device or computer which requests the monitored devices to transmit data, or which requests that remote control and/or diagnostic tests be performed on the monitored devices. The service machine **254** may be implemented as any type of device, and is preferably implemented using a computerized device such as a general purpose computer.

Another sub-system of FIG. **5** includes a firewall **50-2**, an intranet **260-2**, and a printer **262** connected thereto. In this sub-system, the functions of sending and receiving electronic messages by the printer **262** (and similarly by a copier **286**) are performed by (1) circuitry, (2) a microprocessor, or (3) any other type of hardware contained within or mounted to the printer **262** (i.e., without using a separate general purpose computer).

An alternate type of sub-system includes the use of an Internet Service Provider **264** which may be any type of Internet Service Provider (ISP), including known commercial companies such as America Online, Earthlink, and Niftyserve. In this sub-system, a computer **266** is connected to the ISP **264** through a digital or analog modem (e.g., a telephone

line modem, a cable modem, modems which use any type of wires such as modems used over an Integrated Services Digital Network (ISDN) line or an Asymmetric Digital Subscriber Line (ADSL), modems which use frame relay communication, wireless modems such as a radio frequency modem, a fiber optic modem, or a device which uses infrared light waves). Further, a business office device **268** is connected to the computer **266**. As an alternative to the business office device **268** (or any other device illustrated in FIG. **5**), a different type of machine may be monitored or controlled such as a digital copier, any type of appliance, security system, or utility meter, such as an electrical, water, or gas utility meter, or any other device discussed herein.

Also illustrated in FIG. **5** is a firewall **50-3** connected to a network **274**. The network **274** may be implemented as any type of computer network, (e.g., an ethernet or token ring network). Networking software which may be used to control the network includes any desired networking software including software commercially available from Novell or Microsoft. The network **274** may be implemented as an intranet, if desired. A computer **272** connected to the network **274** may be used to obtain information from a business office device **278** and generate reports such as reports showing problems that occurred in various machines connected to the network, and a monthly usage report of the devices connected to the network **274**. In this embodiment, a computer **276** is connected between the business office device **278** and the network **274**. This computer receives communications from the network and forwards the appropriate commands or data, or any other information, to the business office device **278**.

Communication between the business office device **278** and the computer **276** may be accomplished using wire-based or wireless methods including, but not limited to, radio frequency connections, electrical connections and light connections (e.g., an infrared connection, or a fiber optics connection). Similarly, each of the various networks and intranets illustrated in FIG. **5** may be established using any desired manner including through the establishment of wireless networks such as radio frequency networks. The wireless communication described herein may be established using spread spectrum techniques including techniques which use a spreading code and frequency hopping techniques such as the frequency hopping wireless technique which is disclosed in the Bluetooth Specification LOA (available at the World Wide Web site www.bluetooth.com), which is incorporated herein by reference.

Another sub-system illustrated in FIG. **5** includes a firewall **50-4**, an intranet **260-4**, a computer **282** connected thereto, a business office appliance **285** and a copier **286**. The computer **282** may be used to generate reports and request diagnostic or control procedures. These diagnostic and control procedures may be performed with respect to the business office appliance **285** and the copier **286** or any of the other devices illustrated in or used with FIG. **5**. While FIG. **5** illustrates a plurality of firewalls, the firewalls are preferable, but optional equipment, and therefore, the invention may be operated without the use of firewalls, if desired. For the monitoring and controlling of the networked equipment, any computers (**266**, **272** or **282**) can be used instead of **254**.

FIG. **6**A illustrates a device/appliance **300** connected to a typical e-mail exchange system which includes components **302**, **304**, **306**, **308**, **310**, **312**, **314**, **316**, and **318**, which may be implemented in a conventional manner, and are adapted from FIG. **28.1** of Stevens, above. A computer interface **302** interfaces with any of the application units or devices/appliances **300** described herein. While FIG. **6**A illustrates that the device/appliance **300** is the sender, the sending and receiving functions may be reversed in FIG. **6**A. Furthermore, if desired, the user may not be needed to interface with the device/appliance **300** at all. The computer interface **302** then interacts with a mail agent **304**. Popular mail agents for Unix include MH, Berkeley Mail, Elm, and Mush. Mail agents for the Windows family of operating systems include Microsoft Outlook and Microsoft Outlook Express. At the request of the computer interface **302**, the mail agent **304** creates e-mail messages to be sent and, if desired, places these messages to be sent in a queue **306**. The mail to be sent is forwarded to a Message Transfer Agent (MTA) **308**. A common MTA for Unix systems is Sendmail. Typically, the message transfer agents **308** and **312** exchange communications using a TCP/IP connection **310**. Notably, the communication between the message transfer agents **308** and **312** may occur over any size network (e.g., WAN or LAN). Further, the message transfer agents **308** and **312** may use any communication protocol. In one embodiment the present invention, elements **302** and **304** of FIG. **6**A reside in the library to monitor the usage of the application unit.

From the message transfer agent **312**, e-mail messages are stored in user mailboxes **314** which are transferred to the mail agent **316** and ultimately transmitted to the user at a terminal **318** which functions as a receiving terminal.

This "store-and-forward" process relieves the sending mail agent **304** from having to wait until a direct connection is established with the mail recipient. Because of network delays, the communication could require a substantial amount of time during which the application would be unresponsive. Such an unresponsiveness is generally unacceptable to users of the application unit. By using e-mail as the store-and-forward process, retransmission attempts after failures occur automatically for a fixed period of time (e.g., three days). In an alternate embodiment, the application can avoid waiting by passing communicating requests to one or more separate threads. Those threads can then control communication with the receiving terminal **318** while the application begins responding to the user interface again. In yet another embodiment in which a user wishes to have communication completed before continuing, direct communication with the receiving terminal is used. Such direct communication can utilize any protocol not blocked by a firewall between the sending and receiving terminals. Examples of such protocols include Telnet, File Transfer Protocol (FTP) and Hyper Text Transfer Protocol (HTTP).

Public WANs, such as the Internet, are generally not considered to be secure. Therefore, if it is desired to keep messages confidential, messages transmitted over the public WANs (and multi-company private WANs) can be encrypted. Encryption mechanisms are known and commercially available which may be used with the present invention. For example, a C++ library function, crypt( ), is available from Sun Microsystems for use with the Unix operating system. Encryption and decryption software packages are known and commercially available and may also be used with this invention. One such package is PGP Virtual Private Network (VPN) available from McAfee.

As an alternative to the general structure of FIG. **6**A, a single computer may be used which functions as the computer interface **302**, the mail agent **304**, the mail queue **306** and the message transfer agent **308**. As illustrated in FIG. **6**B, the device/appliance **300** is connected to a computer **301** which includes the message transfer agent **308**.

A further alternative structure is shown in FIG. **6**C in which the message transfer agent **308** is formed as part of the device/appliance **300**. Further, the message transfer agent **308** is connected to the message transfer agent **312** by a TCP/IP

connection **310**. In the embodiment of FIG. **6**C, the device/appliance **300** is directly connected to the TCP/IP connection **310** with an e-mail capability. One use of the embodiment of FIG. **6**C includes using a facsimile machine with an e-mail capability (e.g., as defined in RFC **2305** (a simple mode of facsimile using Internet mail)) as the device/appliance **300**.

FIG. **6**D illustrates a system in which a device/appliance **300** does not by itself have the capability to directly receive e-mail, but has a connection **310** to a mail server/POP3 server including a message transfer agent **308** and a mail box **314** so that the device/appliance **300** uses the POP3 protocol to retrieve received mail from the mail server.

FIG. **7** illustrates an alternative implementation of transferring mail and is adapted from FIG. **28**.3 of Stevens referenced previously. FIG. **7** illustrates an electronic mail system having a relay system at each end. The arrangement of FIG. **7** allows one system at an organization to act as a mail hub. In FIG. **7**, there are four MTAs connected between the two mail agents **304** and **316**. These MTAs include local MTA **322**A, relay MTA **328**A, relay MTA **328**B, and local MTA **322**D. The most common protocol used for mail messages is SMTP (Simple Mail Transfer Protocol) which may be used with this invention, although any desired mail protocol may be utilized. In FIG. **7**, **320** designates a sending host which includes the computer interface **302**, the mail agent **304**, and the local MTA **322**A. The device/appliance **300** is connected to, or alternatively included within, the sending host **320**. As another case, the device/appliance **300** and host **320** can be in one machine where the host capability is built into the device/appliance **300**. Other local MTAs **322**B, **322**C, **322**E and **322**E may also be included. Mail to be transmitted and received may be queued in a queue of mail **306**B of the relay MTA **328**A. The messages are transferred across the TCP/IP connection **310** (e.g., an Internet connection or a connection across any other type of network).

The transmitted messages are received by the relay MTA **328**B and if desired, stored in a queue of mail **306**C. The mail is then forwarded to the local MTA **322**D of a receiving host **342**. The mail may be placed in one or more of the user mailboxes **314** and subsequently forwarded to the mail agent **316**, and finally forwarded to the user at a terminal **318**. If desired, the mail may be directly forwarded to the terminal without user interaction.

The various computers used in the present invention, including the computers **266** and **276** of FIG. **5**, may be implemented as illustrated in FIG. **8**. Further, any other computer used in this invention may be implemented in a similar manner to the computer illustrated in FIG. **8**, if desired, including the service machine **254**, computer **272**, and computer **282** of FIG. **5**. However, not every element illustrated in FIG. **8** is required in each of those computers.

In FIG. **8**, the computer **360** includes a CPU **362** which may be implemented as any type of processor including commercially available microprocessors from companies such as Intel, AMD, Motorola, Hitachi and NEC. There is a working memory such as a RAM **364**, and a wireless interface **366** that communicates with a wireless device **368**. The communication between the interface **366** and device **368** may use any wireless medium (e.g., radio waves or light waves). The radio waves may be implemented using a spread spectrum technique such as Code Division Multiple Access (CDMA) communication or using a frequency hopping technique such as that disclosed in the Bluetooth specification.

Computer **360** includes a ROM **370** and a flash memory **371**, although any other type of non-volatile memory (e.g., Erasable Programmable ROM, or an EEPROM) may be used in addition to or in place of the flash memory **371**. An input controller **372** has connected thereto a keyboard **374** and a mouse **376**. There is a serial interface **378** connected to a serial device **380**. Additionally, a parallel interface **382** is connected to a parallel device **384**, a universal serial bus (USB) interface **386** is connected to a universal serial bus device **388**, and also there is an IEEE 1394 device **400**, commonly referred to as a fire wire device, connected to an IEEE 1394 interface **398**. A system bus **390** connects the various elements of the computer **360**. A disk controller **396** is connected to a floppy disk drive **394** and a hard disk drive **392**. A communication controller **406** allows the computer **360** to communicate with other computers (e.g., by sending e-mail messages) over a telephone line **402** or a network **404**. An I/O (Input/Output) controller **408** is connected to a printer **410** and a hard disk **412**, for example using a SCSI (Small Computer System Interface) bus. There is also a display controller **416** connected to a CRT (Cathode Ray Tube) **414**, although any other type of display may be used including a liquid crystal display, a light emitting diode display, a plasma display, etc.

Referring now to FIG. **9**A, there is shown a schematic representation of the overall system **900** in accordance with an exemplary embodiment of the present invention. System **900** is shown to include a plurality of devices, for example, a laser printer **908**, a scanner **910**, a network device **912**, and a multi-function printer **914**, all connected to a network **100**. These plurality of devices are generally referred to herein as "monitored devices". The system **900** also includes a workstation/monitoring system **902** (hereinafter referred to as a controller **902**), the details of which are illustrated in FIG. **10**, connected to the network **100** for monitoring and controlling the monitored devices **908**, **910**, **912** and **914**. Eaeh of the monitored devices **908**, **910**, **912**, and **914** are given a unique address locator. For example, an IP address assigned to a device serves as a unique address locator for the device. Thus, a user at controller **902** is able to access a respective device among the monitored devices **908-914** by accessing the unique IP address assigned to the respective monitored device. It will be appreciated that the present invention is not limited to using IP addresses to uniquely identify devices connected to a network.

The controller **902**, upon accessing a device among the monitored devices **908-914**, displays a web page assigned to the device. The web page includes detailed information about the operational status of the device including troubleshooting information. For example, controller **902** accesses and displays the web page assigned to the laser printer **908**. The web page includes the operational status/details of the laser printer **908** including such details as toner level, indication of paper jam, quantity of print paper in printer trays, etc. Likewise, operational history of the laser printer may also be displayed on the web page. Preferably, unique operational details of the laser printer **908** may be displayed in unique fields on its web page. Likewise, operational status/details of each of the monitored devices **908-914** are displayed on their respective web pages.

It will be appreciated that the controller **902** may be either physically connected or wirelessly coupled to the network **100**. For example, a personal digital assistant (PDA) **920** or a laptop computer **922**, shown to be wirelessly coupled to the network **100**, may also be used as a controller **902**. An access point **924** acts as an interface to enable wireless communications between the network **100** and PDA **902** or laptop computer **922**. Henceforth, the present invention will be described with the assumption that the controller **902** will be controlling and monitoring the status of the monitored devices connected to the network.

The network **100** facilitates communication between the controller **902** and the monitored devices **908-914** to enable monitoring and control of such monitored devices. The number of devices that are connected to the network is not limiting of the present invention. It will be appreciated that the network **100** may be a local area network (LAN) or a wide area network (WAN). Likewise, the monitored devices **908**, **910**, **912**, and **914** are shown to be merely exemplary.

The controller **902** is communicatively coupled to a storage device **904** and a database **906**. The storage device **904** includes a hard disk, optical disk, and/or an external disk drive. The database **906** is communicatively linked to the storage device **904**, and includes a Relational Database Management System (RDBMS) for easy search and retrieval of data stored in the storage device **904**. The storage device **904** preferably stores detailed information about each of the monitored devices **908-914**. For example, detailed information, such as the make, model, and various functions and trouble-shooting details of the laser printer **908**, supplied by its manufacturer, are stored in the storage device **904**. Also, deviation values about the operational status of the laser printer compared to predetermined reference values may also be stored in the storage device **904**. Although the database **906** and the storage device **904** are described to be communicatively coupled to the controller **902**, it will be appreciated that the controller **902** may be built with the storage device and the database installed therein. In such a case, the storage device **906** and the database **904** would be depicted as being internal to the controller **902**.

The controller **902** is installed with software, the details of which are illustrated in FIG. **10**, in order to facilitate monitoring and control of the plurality, of devices **908-914**. Hyper Text Transfer Protocol (HTTP) is used by the controller **902** for monitoring the plurality of devices **908-914** and the data received from the plurality of devices **908-914** is presented in the form of HTML or XML formats, or any other web browser languages.

Although FIG. **9**A illustrates only the imaging devices, the network for communicating information between the monitoring device and the plurality of monitored devices may include the home network where the appliances and meters are connected to the network. It will be appreciated that data collected by the controller/workstation **902** can be sent through e-mail, FTP, or any other communication protocol means to a remote device for further processing. FIG. **9**B illustrates an exemplary web page interface for a monitored device in accordance with an exemplary embodiment of the present invention.

FIG. **10** illustrates a system **1000** used in the monitoring of the data and their interface functions in accordance with an exemplary embodiment of the present invention. The system **1000** includes a module MonitorService **1004** which is a computer resident program such as Service in NT or Window 2000 and Daemon in the Unix. Also included in system **1000** are a Timer module **1002** and Monitor module **1006**. Modules **1002** and **1006** are library functions to be called by the MonitorService **1004**. For example, MonitorService **1004** initializes the Timer module **1002** by calling InitTimer **1003** function and obtains delay and action parameters by calling obtainDelayAndAction (int &, int&) function. The init( ) function is also called by the MonitorService **1004** to initialize various modules in the Monitor module **1006** as illustrated in FIG. **13**. The init( ) function is initially called to obtain the IP address assigned to a monitored device.

Once the IP address of a monitored device is obtained, such IP address is used by the monitoring system to contact the monitored device to obtain such information as, for example, manufacturer and model information. The functions executed by the system **1000** as described as below:

void initTimer(void)

This function initializes the Timer. In particular, this function triggers the Timer object to get the timing information from the registry.

void obtainDelayAndAction(int & out_nDelay, int & out_nAction)

This function returns the delay time in second for::Sleep function (need to multiply **1000**) and the action indicator.

int init(void)

This function initializes the Monitor. In addition, it would create the devices to be monitored. The return int is the error code in which zero is defined as no error.

int monitorStatus(int in_nAction)

This function monitors the preset information. The return int is the error code in which zero is defined as no error.

int end(void)

This function cleans up the Monitor before closing the objects. The return int is the error code in which zero is defined as no error.

FIG. **11** shows the structural details within the Monitor module **1006** and the calling functions between the sub-modules of the Monitor module **1006**. The Monitor module **1006** includes a Monitor manager **1102** that manages other sub-Modules, such as DeviceODBC **1104**, DeviceFactory **1106**, VendorModel **1108**, HTTP_HTML **1112**, SupportInfoODBC **1114**, Device **1110**, to complete the tasks defined by interface functions as illustrated in FIG. **10**. Specifically, the DeviceODBC sub-module **1104** and SupportInfoODBC sub-module **1114** are accessed to obtain device specific information from a monitored device. The SupportInfoODBC sub-module **1114** is preferably attached to the protocol HTTP_HTML sub-module **1112** as the information obtained by the SupportInfoODBC sub-module **1114** is preferred to be localized to the HTTP_HTML sub-module **1112**. The calling functions executed between the sub-modules are defined as below:

Major Interfaces

This section discusses only the major interface between the packages. The following is not the complete listing of the interfaces among the packages. For example, some packages may need to have init functions.

void updateConfig(std::map<infoType, std::string>&)

Before this function is called, the calling function should not replace the manufacturer and model entries if get functions return null string from VendorModel package. This function updates the device information database of the current record in the DeviceODBC. This function is most efficient when the getconfig below is called initially. First, this function checks if IP address is same at the DeviceODBC. If IP address fields are not the same, the record with correct IP address is obtained from the database. Then, the other fields are copied and the record is updated.

bool getConfig(std::map<infoType, std::string>&)

This function obtains the map from ODBC for the device information in the given format. The function returns true if there is data returned, false if there is no more data.

bool saveStatus(std::map<infoType, std::string>&)

This function saves the status information into the ODBC. The function returns true when saving is successful, false otherwise.

void setIPAddress(std::string &)

This function sets the IP address of the device to be contacted. This function is common for VendorModel and HTTP_HTML packages.

bool getVendor(std::string &)

This function gets the manufacturer at the IP address. If the manufacturer is obtained, the function returns true. If the error is detected in the process, the function returns false with null strings. The function is common for VendorModel and HTTP_HTML packages.

bool getModel(std::string &)

This function gets the model of the device. If the model is obtained, the function returns true. If the error is detected in the process, the function returns false with null string. The function is common for VendorModel and HTTP_HTML packages.

bool getUniqueID(std::string & out_sID)

This function returns the unique ID of the device. If the Unique ID is obtained, the function returns true. If the error is detected in the process, the function returns false with null string. The function is common for VendorModel and HTTP_HTML packages.

bool getVendorModelID(int & out_nID)

This function returns the VendorModel ID of the device. If the ID is obtained, the function returns true. If the error is detected in the process, the function returns false. This function is common for VendorModel and HTTP_HTML packages.

CDevice * createDevice(std::string & in_sIP, CHTTP_HTML & in_HTTP_HTML, int & in_nVendorModelID, std::string & in_sUniqueID)

This function creates the device of the specification in the Device Factory. The function returns the pointer to the created device if the creation is successful, 0 otherwise.

bool getStatus(std::map<infoType, std::string>&)

This function obtains status information from a device. The function returns true when the status is returned, false when status could not be obtained. This function is common for Device and HTTP_HTML packages.

void setIPAddressAndID(std::string & in_sIP, int in_nID)

This function sets the IP address and Vendor Model ID.

bool getVendorInfo(std::string & out_sVendor, std::string & out_sWebPage, CKeyValueInfo & out_KeyValueInfo)

This function outputs the string of Vendor name, the web page to obtain the model information from the vendor, CKeyValueInfo structure for model. The function returns true if the data is obtained, false with null strings and null data if no more data is available. When false is returned, the data pointer is reset to the top of the data.

bool getVendorModelInfo(std::string & out_sVendor, std::string & out_sModel, int & out_nID, std::string & out_sWebPage, CKeyValueInfo & out_KeyValueInfo)

This function outputs the strings of vendor name, model name, the vendor model ID, the web page to obtain the unique ID, and CKeyValueInfo structure for Unique ID. The function returns true if the data is obtained, false with null strings and null data if no more data is available. When false is returned, the data pointer is reset to the top of the data.

void setVendorModelID(int in_nID)

This function sets the VendorModelID value to be used by SupportInfoODBC to get the web page information.

bool getWebPageInfo(std::string & out_sWebPage, CKeyValueInfo & out_KeyValueInfo)

This function outputs the web page and CKeyValueInfo structure for the Vendor Model ID set by the previous function. The function returns true if the information is returned, false with null information if no more data is available. If false is returned, the data pointer is reset to the top of the current Vendor Model ID set. The returned information is stored in the map structure of HTTP_HTML package.

FIG. **12** shows the data structure used by HTTP_HTML sub-module **1112** and SupportInfoODBC sub-module **1114** as illustrated in FIG. **11** to exchange information for retrieval of values associated with key values received by the HTTP_HTML sub-module **1112**. Typically, a multitude of vendors use vendor specific identifier and nomenclature to identify key information, displayed on their respective web pages, related to a monitored device. For example, to determine the number of pages printed by a printer device, Hewlett Packard uses "Page Count" feature while Xerox identifies the same using a "Total Sheet Delivered" feature. A feature of the present invention is to overcome the vendor-to-vendor variances and thereby providing a standardized and uniform method of identifying device specific information and extracting the value corresponding to the information by using a data structure/CKeyValueInfo structure **1200** as illustrated in FIG. **12**.

The CKeyValueInfo is typically a data structure created to identify value information from information that is received from a monitored device in the form of a data string or a key string. The CKeyValueInfo includes a plurality of fields, each field represented by information illustrated in FIG. **12**. The CKeyValueInfo structure **1200** includes an sKey field **1204** that represents a string key, an nPosition field **1206** which is preferably a tag based value in HTML format indicating as to the number of positions in the string where a value information could be located. For example, the Page Count of a printer device, subject to monitoring, may be found at a second position following a key word. sType **1208** represents the type of information one can retrieve from a displayed web page of a monitored device.

When the value, such as, for example, model name of the monitored device, is found within the same data line of the key (Product Name), the nPosition field is "0". sDelimiter **1210** indicates a specific delimiter used to extract the value associated with the key. The CKeyValueInfo indicates how to extract the value information from information received from a monitored device in an HTML format.

FIG. **13** shows the sequence of the init function to describe the calling sequence of Monitor module **1006** as illustrated in FIG. **10**. MonitorManager **1102** obtains information about a monitored device and uses IP address assigned to the monitored device to communicate with the monitored device. MonitorManager **1102** accesses DeviceODBC **1104** to obtain configuration information about the monitored device. The configuration information returned to the MonitorManager **1102** includes, for example, an IP address of the monitored device, vendor/manufacturer and model information of the monitored device. Once IP address is obtained, the MonitorManager **1102** sets the IP address to obtain device specific information from the monitored device. The HTTP_HTML **1112** is used to obtain to obtain Vendor, Model, Unique ID, and VendorModel ID from the monitored device.

Once the vendor, model information and unique ID are obtained, the MonitorManager **1102** updates a database with information received from the monitored device. Further, the MonitorManager **1102** creates a software device object through the DeviceFactory **1106**. Each device model from a

vendor/manufacturer may be assigned a unique identifier, and it is preferred to represent the model from the vendor using the identifier for enhanced efficiencies, as an identifier typically requires no more than **4** bytes.

The methodology of extracting value information such as vendor, model and unique ID from the monitored device is obtained from SupportInfo ODBC **1114** in the form illustrated in FIG. **12**. In addition, a specific webpage needs to be accessed is governed by the information residing in the SupportODBC **1114**. Once IP address, Vendor Model ID and unique ID are obtained, a software object of the monitored device is created using a DeviceFactory module **1106**. Once the software object is created, information in the DeviceODBC is updated so that the vendor, model, and unique ID are set to DeviceODBC database that stores status information of each monitored device. The updates are performed by updateConfig function **1109** by the MonitorManager **1102**.

FIG. **14** illustrates an exemplary map data structure **1400** used by HTTP_HTML Package**1112** to retrieve status information of devices that are periodically monitored. The map structure or data structure **1400** is a part of the standard template of C++. However, other languages can have the similar data structure where key and value information is placed into a table-like structure. The first level **1402** of the map structure **1400** includes a Key that is associated with another map structure **1404** where the key from the first level **1402** is associated with a value. The second level map **1404** includes the Web page identified at field **1406** as the key and a vector of CKeyValueInfo as the value identified at field **1408**.

The data structure used by the MonitorManager **1102** is identified as below. This data structure reflects the information regarding one monitored device. The data structure contains the e-mail address of the contact person in addition to the telephone number. The following table shows the DeviceInfo structure.

TABLE 1

Type	Name	Description
std::string	m_sManufacturer	A string representing the manufacturer of the network printer.
std::string	m_sModel	A string representing the model of the network printer.
std::string	m_sUniqueID	A string representing the Unique ID of the network printer. This ID may be a serial number or MAC Address or any unique ID obtainable from the network printer.
std::string	m_sIPAddress	A string representing the IP address of the network printer.
std::string	m_sCompanyName	A string representing the name of the company which owns the network printer.
std::string	m_sStreet	A string representing the street address of the company.
std::string	m_sCity	A string representing the city where the company is located.
std::string	m_sState	A string representing the state where the company is located.
std::string	m_sZipCode	A string representing the zip code of the company.
std::string	m_sLocation	A string representing the location of of the network printer within the company.
std::string	m_sContactPerson	A string representing the name of the contact person responsible for the network printer.
std::string	m_sPhoneNumber	A string representing the phone number of the contact person.
std::string	m_sEMailAddress	A string representing the e-mail address of the contact person.

FIG. **15** shows a vector **1500** of the reference to the devices created by DeviceFactory **1106** and used by the MonitorManager **1102** as illustrated in FIG. **13** of the present invention. MonitorManager **1102** stores device pointers **1502**, **1504** created by DeviceFactory **1106** in the vector so that it can iterate over to obtain the status of a monitored device. Polling of monitored devices is performed over the device object by issuing a getStatus command. Once the status of each of the software objects is obtained, such status is updated through the DeviceODBC **1104**.

FIG. **16** shows the sequence of the monitorStatus function as illustrated in FIG. **10**. MonitorManager **1102** obtains the status of the software device object connected with the physical device through HTTP_HTML **1112** and stores the received status in a database through the DeviceODBC **1104** by the MonitorManager **1102**. This process is repeated over all the monitored devices stored in the vector shown in FIG. **15**.

FIGS. **17**A-**17**B illustrate a table structure to support information collection through the HTTP_HTML module **1112** (FIG. **11**). The tables illustrated in FIGS. **17**A-B are preferably stored in a database which communicates with the monitoring system **902** (FIG. **9**) through SupportInfoODBC **1114**. Specifically, FIG. **17**A shows four tables along with respective database fields. KeyValue table **1704** includes such information as, for example, the web page ID, key string information used to extract the parameter value of interest, value position in the HTML structure, value type, delimiters if the value is located in the same data as the key string, nInLinePosition of the value when the value is located in the same data as the key string, and the standard enumerator for the key string.

VendorModelWebPage table **1706** associates the web page ID to actual web page string. KeyEnumTable **1708** includes the standard enumerations and their description. VendorModelInformation table **1710** includes vendor related information for a monitored device, and VendorModelUniqueID table **1712** includes information that is used to obtain the unique ID from the device.

FIG. **17**C shows exemplary data stored within the three tables illustrated in FIGS. **17**A-B. IP Address table **1702** is an example of a particular network environment associating the devices with IP addresses. In this example, the first four digits of the web ID is taken from the first four digits of the vendor model ID. In the KeyValue table **1704**, Model (101) identified at **1710** and **1712** has two different key strings, "Machine Model" and "Product Name". In addition, the Machine Model and Product Name are located at the different value positions. Machine Model is obtained from the next tagged data in the HTML while Product Name is obtained from the same line. Product Name is separated from the actual model name with a delimiter ':'. Exemplary enum types used by the present invention include the following. The enum types are merely exemplary and therefore should not be construed as limiting the present invention.

infoType (typedef int infoType)

This section describes the definition of the infoType (int). The value range 0 through 99 is assigned to the data type. The value range 100 to 499 is assigned to Device Information. The value range 500 to 1999 is assigned to the common parameters including standard MIB parameters. The range 2000 to 3999 is assigned to Ricoh specific information. The range 4000 to 4999 is assigned to Xerox. The range 5000 to 5999 is assigned to Lexmark. The range 6000 to 6999 is assigned to HP. The values are defined as follows:

infoType {eNotDefine=0, eDeviceInformation=1, eStatusInformation=2, eManufacturer=100, eModel, eUniqueID, eIPAddress, eCompanyName, eStreet, eCity, eState, eZipCode, eLocation, eContactPerson, ePhoneNumber, eEMailAddress, eDateTime=500, eHrDeviceErrors, eLowPaper, eNoPaper, eLowToner, eNoToner, eDoorOpen, eJammed, eOffline, eServiceRequested, ePrtGeneralConfigChanges=600, ePrtLifeCount, ePrtAlertDesc1, ePrtAlertDesc2, ePrtAlertDesc3, ePrtAlertDesc4, ePrtAlertDesc5, eBlack=700, eMagenta, eCyan, eYellow, eTonerCollector=800, eBlackDeveloper=810, eColorDeveloper, eFuser=820, eDrum=830, eTransfer=840, eMaintenanceKit=850, eOilKit=860, eStationInfo1=901, eStationInfo2, eStationInfo3, eStationInfo4, eStationInfo5};

ErrorCode

This section describes the error codes defined at this writing. As the project progresses, more error codes can be added. The range 0-99 is reserved. The range 100-199 is for SMTP, 200-299 is for POP3, 300-399 is for Socket, and 400-499 is for HTTP. The other range shall be defined if needed.

enum EerrorCode(eNoError=0, eUnknownError=1, eSendHeloCommandFailed=100, eSendMailCommandFailed, eSendRcptCommandFailed, eSendDataCommandFailed, eSendDataFailed, eSendQuitCommandFailed, eSendUserCommandFailed=200, eSendPassCommandFailed, eSendStatCommandFailed, eSendRetrCommandFailed, eSendDeleCommandFailed, eSendQuitPop3CommandFailed, eCreateSocketFailed=300, eConnectSocketFailed, eBadRequest=400, eUnauthorized, ePaymentRequired, eForbidden, eNotFound, eMethodNotAllowed, eNotAcceptable, eProxyAuthenticationRequired, eRequestTimeOut, eConflict, eGone, eLengthRequired, ePreconditionFailed, eRequestEntityTooLarge, eRequestURiTooLarge, eUnsupportedMediaType, eRequestedRangeNotSatisfiable, eExpectationFailed, eInternalServerError=450, eNotImplemented, eBadGateway, eServiceUnavailable, eGatewayTimeOut, eHTTPVersionNotSupported, eMultipleChoices=480, eMovedPermanently, eFound, eSeeOther, eNotModified, eUseProxy, eTemporaryRedirect);

FIG. **18** shows the extension of the current system where multiple protocols are used to collect information from a plurality of monitored devices. An example of such extension is to use both SNMP **1804** and HTTP **1806** protocols to collect the status information of the monitored devices. Multiple protocols allow the monitoring station to collect wider range of the data. In addition, multiple protocols allow more devices to be monitored. For example, some devices may support only one protocol. A protocol manager **1802** performs a selection process to select a protocol, among a given plurality of protocols, that is better configured to retrieve information from the monitored device. For example, to retrieve paper jam status, it was determined that an SNMP protocol would be better suited over HTTP protocol for some vendor's devices. For known devices, such preferences are predetermined and stored in a database, such as SupportInfoODBC **1114**. The protocol manager **1802** consults the SupportInfoODBC **1114** to identify the predetermined preferences and appropriately selects the protocol to communicate with a monitored device.

In another embodiment, more than one protocol is used to retrieve information from a monitored device. For example, an HTTP_HTML protocol is first selected to access a monitored device, and device information that is configured to be efficiently retrieved using the HTTP_HTML protocol is obtained. Subsequently, an SNMP protocol is selected to obtain information that was incapable of efficient retrieval using the HTTP_HTML protocol. The selection of protocols is performed by the protocol manager in conjunction with support information stored in the SupportInfoODBC **1114**.

FIG. **19** shows a schematic for e-mailing information about the monitored devices to a desired party. After obtaining the necessary information, the workstation **902** uses the Simple Mail Transfer Protocol (SMTP) Server **1902** to send out the necessary information to the central monitoring workstation **1910** through the Mail Server **1908** that supports the Post Office Protocol Version 3 (POP3) (IETF Networking Group Request For Comments [RFC]: **1939**). The workstation **902** uses SMTP (SMTP is defined in IETF RFC **821**) and possibly Multipurpose Internet Mail Extensions (MIME) to send e-mails. The workstation **902** generates the mail message that is at and above the Application Layer of the TCP/IP model or the ISO seven-layer model. Alternatively, the workstation **902** may include an SMTP processor to send out the necessary information using e-mail. When e-mail is sent out from the SMTP Server **1902**, the e-mail goes through the firewall **1906**.

When the e-mails that contain the monitoring information of devices arrive at the firewall **1904** of the network receiving the information, the mail is routed to the Mail Server **1908** with POP3. The central monitoring workstation **1910** periodically accesses the Mail Server **1908** to obtain the arrived e-mail, parse the mail and its contents via POP3 and stores the necessary information in the database **1912**. The database **1912** includes additional information related to the characteristics and history of a monitored device. The central monitoring workstation **1910** is capable of performing the analysis of obtained data in order to take the necessary actions. Alternatively, the central monitoring workstation **1910** may contain a mail receiving capability, and the firewall **1904** may route the e-mail directly to the central monitoring workstation **1910**.

FIG. **20** shows the class diagram for the HTTP_HTML (**1112**) package as shown in FIG. **11**. The HTTP_HTML (**1112**) package is responsible for determining the vendor, the model, the unique ID, and the vendor model ID of a device, such as, for example, the network printer **908** (FIG. **9**) that is being monitored using the Hypertext Transfer Protocol (HTTP). Once this information is obtained for the network printer, package **1112** is used to obtain the status information from the network printer using HTTP. The CHTTP_HTML (**2000**) class is the interface for package **1112** to obtain information about the network printer by accessing a web server of the network printer using HTTP. CHTTP_HTML (**2000**) manages the other classes in the package **1112** to perform this task. The CHTTP (**2004**) class implements the HTTP protocol. CHTTP (**2004**) creates an HTTP session with the network printer to obtain information from the web pages of its web server. CHTTP (**2002**) uses the classes CInternetSession (**2008**), CHttpConnection (**2010**), and CHttpFile (**2012**) of the Microsoft Foundation Class library (MFC) to implement the HTTP protocol. The CHTMLProcessor (**2002**) class processes the HTML files obtained from the network printers and obtains the desired information from the HTML files. The CHTTP_HTML (**2000**) class uses the SupportInfoODBC (**1114**) package to obtain information about the vendors and models of network printers supported by the monitoring system. Although the description in this specification refers to network printers, the system is applicable to any network device such as, for example, copiers, scanners, and fax machines.

The CHTTP_HTML (**2000**) class determines if a network printer is supported by the system. If the network printer is supported, then CHTTP_HTML (**2000**) creates an HTTP session with the network printer to obtain information from the

network printer's web pages. The public and private functions of CHTTP_HTML (**2000**) are shown in Table 1. The attributes of CHTTP_HTML (**2000**) that are used by these functions are shown in Table 2.

The CHTMLProcessor (**2002**) class parses lines of the HTML file to obtain specific information about the network printer **908** (FIG. **9**). The public and private functions of CHTMLProcessor (**2002**) are shown in Table 3. The

TABLE 1

Public and Private Functions of CHTTP_HTML

	Function Name	Description
Public	CHTTP_HTML( )	Constructor
	~CHTTP_HTML( )	Destructor
	bool setIPAddress(std::string& in_sIP)	Sets the IP address of the device to be contacted via HTTP. Creates an HTTP session with the device to determine the vendor, model, vendor model ID and unique ID.
	bool setIPAddressAndID(std::string& in_sIP, int in_nID)	Sets the IP address and vendor model ID of the device for which the status information will be obtained.
	bool getVendor(std::string& out_sVendor)	Returns the vendor of the device
	bool getModel(std::string& out_sModel)	Returns the model of the device
	bool getUniqueID(std::string & out_sUniqueID)	Returns the unique identifier of the device
	bool getVendorModelID(int& out_nID)	Returns the vendor model ID of the device
	bool getStatus(std::map<infoType, std::string>& out_StatusInfo)	Returns the status information of the device.
Private	void setVendorModelInfo Vector( )	Obtains information from the support database to initialize the vector m_VendorModelInfoVector.
	void setVendorModelIDMap( )	Obtains information from the support database to initialize the map m_VendorModelIDMap.
	void obtainVendor( )	Obtains the vendor name for the device
	void obtainModel( )	Obtains the model name for the device
	void obtainVendorModelID( )	Obtains the vendor model ID for the device
	void obtainUniqueID( )	Obtains the unique identifier for the device
	void converToAllUpper(std::string& inOut_sString)	Converts the input string to all upper case

TABLE 2

Attributes of CHTTP_HTML

Type	Attribute Name	Description
std::vector <CVendorModelInfo>	m_VendorModelInfoVector	This attribute member is used to determine what vendors are supported by the system. This attribute member also contains information used to obtain model information of the device. It is initialized in setVendorModelInfoVector( ).
std::map<std::string, map<std::string, CVendorModelID> >	m_VendorModelIDMap	This attribute member determines what models are supported by the system. This attribute member also contains the vendor model ID of the device and information used to obtain the unique ID for a given model of the device. The key for the outer map is the vendor name. The key for the inner map is the model name. It is initialized in setVendorModelIDMap( ).
std::map<int, map<std::string, std::vector <CKeyValueInfo> > >	m_VendorModelMap	This attribute member contains information used to obtain the status of the devices that are periodically monitored.
std::string	m_sIPAddress	This attribute member represents the IP address of the device in the current HTTP session.
std::string	m_sVendor	This attribute member represents the vendor of the device in the current HTTP session.
std::string	m_sModel	This attribute member represents the model of the device in the current HTTP session.
std::string	m_sUniqueID	This attribute member represents the unique identifier of the device in the current HTTP session.
Int	m_nVendorModelID	This attribute member represents the vendor model ID of the device in the current HTTP session.
CKeyValueInfo	m_KeyValueInfoForModel	This attribute member is used to obtain the model of the device from the HTML file.
CVendorModelID	m_VendorModelID	This attribute member is used to obtain the vendor model ID and the unique ID of the device from the HTML file.
CHTTP	m_HTTP	This attribute member is used to obtain an HTTP session. with a device.
CHTMLProcessor	m_HTMLProcessor	This attribute member processes the HTML file to obtain the desired information.

attributes of CHTMLProcessor (**2002**) that are used by these functions are shown in Table 4.

TABLE 3

Public and Private Function of CHTMLProcessor

	Function Name	Description
Public	CHTMLProcessor( )	Constructor
	~CHTMLProcessor( )	Destructor
	void setDataSearchInfo(std::vector<CKeyValueInfo>& in_KeyValueVector)	Sets the data to be obtained from the HTML file
	bool searchDataFromHTML(std::string& in_sLineOfHTML)	Searches through the HTML file to obtain the desired status information
	void getDataFromHTML(std::map<infoType, std::string>& out_Status)	Get the status information obtained from the device's HTML file
Private	bool obtainValueFromCurrentLine(std::string& out_sData, CLocateValueInfo& inOut_LocateValueInfo, CKeyValueInfo& in_KeyValueInfo, std::string& in_sInputLine)	Obtain the status information from the current line
	bool obtainValueFromNextLine(std::string& out_sData CLocateValueInfo& inOut_LocateValueInfo, CKeyValueInfo& in_KeyValueInfo, std::string& in_sInputLine)	Obtain status information from the lines following the line where the key of the status information was found
	void obtainDataVector(std::vector<std::string>& out_DataVector, std::string& in_sInputString)	Obtain the data elements from a line of the HTML file
	bool getValueFromString(std::string& out_sValue, std::string& in_sInputLine, CKeyValueInfo& in_KeyValueInfo)	Obtain the status information from the input string
	void removeLineBreaksFromLine(std::string& inOut_sInputLine)	Removes line breaks from the input string
	void removeLinksFromLine(std::string& inOut_sInputLine)	Removes link tags from the input string
	void getLeadingCharacters(std::string& out_sValue, std::string& inOut_sInputLine)	Obtains leading characters from the input string
	void removeLeadingEndTags(std::string& inOut_sInputLine)	Removes leading end tags from the input string
	void removeLeadingStartTags(std::string& inOut_sInputLine)	Removes leading start tags from the input string
	void removeLeadingWhiteSpaces(std::string& inOut_sInputLine)	Removes leading white spaces from the input string
	void removeTrailingWhiteSpaces(std::string& inOut_sInputLine)	Removes trailing white spaces from the input string
	Void changeNBSPToSpace(std::string& inOut_sInputLine)	Replaces non-breaking spaces with a space in the input string

TABLE 4

Attributes of CHTMLProcessor

Type	Attribute Name	Description
std::string	m_sInputLines	This attribute member contains the lines of the HTML file.
std::string	m_sPreviousInputLines	This attribute member contains the lines inputted previously from the HTML file.
std::vector<CKeyValueInfo>	m_KeyValueVector	This attribute member contains information used to obtain the status information from the HTML file.
std::vector<CLocateValueInfo>	m_LocateValueVector	This attribute member contains information used to locate the value of the status information from the HTML file once the key is found.
EHTMLState	m_CurrentHTMLState	This attribute member represents the HTML state at the end of the current input line.
EHTMLState	m_PreviousHTMLState	This attribute member represents the HTML state at the end of the previous input line.
std::vector<std::string>	m_DataVector	This attribute member contains the data values obtained from a line of the HTML file.
Bool	m_bIsDataVectorObtained	This attribute member is a flag to determine if the data values were obtained from a line of the HMTL files. This function is set to false in the constructor and searchDataFromHTML( ) and set to true in obtainValueFromNextLine( ).
std::map<infoType, std::string>	m_StatusInfo	This attribute member represents the status information obtained from the device's HTML file.

FIG. **21** shows the sequence diagram for executing the init( ) function of CHTTP_HTML (**2000**). init( ) obtains and maintains information about the vendors and models of network printers supported by the system. init( ) calls the functions setVendorModelInfoVector( ) and setVendorModelIDMap( ) of CHTTP_HTML (**2000**) to obtain and maintain this

65

information. setVendorModelInfoVector( ) obtains and maintains information about the vendors of network printers supported by the system and information used to obtain the model of the network printers from its web pages.

setVendorModelInfoVector( ) calls getVendorInfo( ) of SupportInfoODBC (**1114**) to obtain this information from the database. setVendorModelInfoVector( ) stores the information in the vector as shown in FIG. **22**. getVendorInfo( ) of SupportInfoODBC (**1114**) is called multiple times to obtain all the vendors supported by the system. setVendorModelIDMap( ) obtains and maintains information about the vendors, models, vendor model IDs, and information used to obtain the unique identifier of the network printers from its web pages.

setVendorModelIDMap( ) calls getVendorModelInfo( ) of SupportInfoODBC (**1114**) to obtain this information from the database. setVendorModelIDMap( ) stores the information in the map as shown in FIG. **23**. getVendorModelInfo( ) of CSupportInfoODBC (**2102**) is called multiple times to obtain all the models supported by the system. By storing the information about the vendors and models of the network printers supported by the system, the need to periodically open and close the database to determine if a network printer is supported is prevented. The database is opened and closed once for obtaining all the information about the vendors and models supported by the system. By checking the information stored in the system's own structure, the system can determine if a particular network printer is supported.

FIG. **22** shows the vector, m_VendorModelInfoVector (**2200**), used by the class CHTTP_HTML (**2000**) to store information about vendors of the network printers supported by the system, and information used to obtain the model of the network printers from its web pages. m_VendorModelInfoVector (**2200**) includes the struct CVendorModelInfo (**2202**). The struct CVendorModelInfo (**2202**) includes a string for the name of the vendor of the network printer, a string for the web page of the network printer where the name of the model can be found, and a struct CKeyValueInfo (**2204**) that contains information used to obtain the name of the model from the web page. The struct CKeyValueInfo (**2204**) is described in FIG. **12**. As the system uses an entry from the vector, m_VendorModelInfoVector (**2200**), the system will try to access the web page corresponding to the struct CVendorModelInfo (**2202**). If the system is able to access the web page, then the vendor of the network printer is determined to be the vendor name in the struct CVendorModelInfo (**2202**).

The model name of the network printer is obtained from the web page using the information in the struct CKeyValueInfo (**2204**) of the struct CVendorModelInfo (**2202**). If the model name is obtained from the web page, it preferably would be checked with the map m_VendorModelIDMap described below at FIG. **23** to determine if the model is supported. If the system cannot access the web page or if the model name cannot be obtained from the web page, the system will go to the next elements in the vector until the vendor can be determined and the model name can be obtained. If the system goes through the entire vector without determining the vendor and obtaining the model name, then it is determined that the network printer is not supported by the system. The vector may have multiple entries having the same vendor name. This is possible since the vendor may have different families of network printers in which each family has a different web page where the model name can be found. Also, the vendor may have different network devices (i.e. scanners, fax machines) in which each network device has a different web page where the model name can be found.

FIG. **23** shows a map, m_VendorModelIDMap (**2300**), used by the class CHTTP_HTML (**2000**) to store information about the vendor, model, vendor model ID, and information used to obtain the unique identifier of the network printers from its web pages. The key of m_VendorModelIDMap (**2300**) is a string that represents the name of the vendor. The value of m_VendorModelIDMap (**2300**) is another map (**2302**) structure. The key of the map (**2302**) is a string that represents the name of the model. The value of the map (**2302**) is the struct CVendorModelID (**2304**). The struct CVendorModelID (**2304**) includes an integer for the vendor model ID, a string for the web page of the network printer where the unique identifier can be found, and a struct CKeyValueInfo (**2306**) that includes information used to obtain the unique identifier from the web page. Further details of the struct CKeyValueInfo (**2306**) are described in FIG. **12**. The system uses this map after the vendor name and the model name has been obtained using the information in the vector m_VendorModelInfoVector as described above. The vendor name will be used as the key to obtain the map (**2302**) from m_VendorModelIDMap (**2300**). The model name will be used as the key to obtain the struct CVendorModelID (**2304**) from the map (**2302**). The vendor model ID associated with the network printer is obtained from the m_nVendorModelID member of struct CVendorModelID (**2304**). The system accesses the web page of the network printer corresponding to the m_sWebPageForUniqueID member of the struct CVendorModelID (**2304**). If the system can successfully access the web page, then the unique ID of the network printer is obtained from the web page using the information in the struct CKeyValueInfo (**2306**) of the struct CVendorModelInfo (**2304**). If the system cannot access the web page or the unique ID cannot be obtained from the web page, a unique ID will be generated for the network printer using a random number generator. If the model name cannot be found as a key in the map (**2302**), then it is determined that the model is not supported by the system.

The vector m_VendorModelInfoVector (**2200**) and the map m_VendorModelIDMap (**2300**) are the internal structures of the system used to represent the information in the database. The vector m_VendorModelInfoVector (**2200**) represents the VendorModelInformation table of the support database and the map m_VendorModelIDMap (**2300**) represents the VendorModelAndUniqueIDs table of the support database. By storing the information from the support database in these internal structures, the system will be more efficient since it does not need to access the database periodically to obtain the desired information.

FIG. **24** shows the flowchart for executing the init( ) function of CHTTP_HTML. In step **2402**, the system determines if there is any more vendor information in the support database. If there is more information, then in step **2404**, the vendor name, the web page where the model name is located, and information used to obtain the model name from the web page are obtained. This information is stored in the struct CVendorModelInfo (**2202**) in step **2406** and then pushed into the vector (**2200**), as shown in FIG. **22**, in step **2408**. Then the system goes back to step **2402** to see if there is more vendor information in the support database. If there is no more vendor information in the support database, then the system executes step **2410** to determine if there is any more vendor model information in the support database. If there is more vendor model information, then in step **2412**, the vendor name, the model name, the vendor model ID, the web page where the unique identifier is located, and information used to obtain the unique identifier from the web page are obtained. The vendor model ID, the web page where the unique identifier is located, and information used to obtain the unique identifier from the web page are stored in the struct CVendor-

ModelID in step **2414**. The model name and the struct CVendorModelID are added to the map (**2302**) as shown in FIG. **23**, and the vendor name and the map (**2302**) are added to the map m_VendorModelIDMap (**2300**), as shown in FIG. **23**, in step **2416**. Then the system goes back to step **2410** to determine if there is more vendor model information in the support database. If there is no more vendor information in the support database, the init( ) function is completed.

FIG. **25** shows the sequence diagram for executing the getStatus( ) function of CHTTP_HTML (**2000**). This function obtains the status information from the web pages of the network printers. The status information obtained depends upon the vendor and model of the network printer so that the type of status information obtained from one network printer may differ from that of another network printer. CHTTP_HTML contains a map (**1400**) structure as shown in FIG. **14** that contains information about what status information to obtain from the network printer of a specific vendor and model. The map (**1400**) contains information about how to obtain the status information from the web pages of the network printer. CHTTP_HTML (**2000**) creates an HTTP session with the network printer by calling createHTTPSession( ) of CHTTP (**2004**). Once the HTTP session is created, an HTTP GET request is sent to the network printer to access a web page when CHTTP_HTML (**2000**) calls sendGetRequest( ) of CHTTP (**2004**). If the GET request is successful, CHTTP_HTML (**2000**) calls setDataSearchInfo( ) of CHTMLProcessor (**2002**) to provide CHTMLProcessor (**2002**) with information about how to obtain the status information from the web page of the network printer. CHTTP_HTML (**2000**) calls getNextLineOfHTML( ) of CHTTP (**2004**) to obtain a line from the web page of the network printer. CHTTP_HTML (**2000**) passes this line of the web page into the function searchDataFromHTML( ) of CHTMLProcessor (**2002**).

CHTMLProcessor (**2002**) will obtain any status information from this line if it exists. CHTTP_HTML (**2000**) will continue to call getNextLineOfHTML( ) of CHTTP (**2004**) followed by searchDataFromHTML( ) of CHTMLProcessor (**2002**) until the end of the web page is reached or all the status information is obtained from the web page. CHTTP_HTML (**2000**) will call getDataFromHTML( ) of CHTMLProcessor (**2002**) to get the status information obtained from the web page. Since the status information of a network printer may exist on multiple web pages, the call sequence from sendGetRequest( ) of CHTTP (**2004**) to getDataFromHTML( ) of CHTMLProcessor (**2002**) is repeated for each web page of the network printer that contains status information. After all the status information is obtained, CHTTP_HTML (**2000**) calls closeHTTPSession( ) of CHTTP (**2004**) to close the HTTP session with the network printer.

FIG. **26** shows the vectors m_KeyValueVector (**2600**) and m_LocateValueVector (**2604**) used by the class CHTMLProcessor to obtain information from the web page of a network printer. The vector, m_KeyValueVector (**2600**), contains the struct CKeyValueInfo (**2602**). The struct CKeyValueInfo (**2602**) contains information used to locate and obtain information from the web page of the network printer. The struct CKeyValueInfo (**2602**) is described in greater detail in FIG. **12**. The sKey member of struct CKeyValueInfo (**2602**) is used to locate the key for the information on the web page. The nPosition, sDelimiter, and nInLinePosition members of struct CKeyValueInfo (**2602**) are used to locate and obtain the value of the information on the web page. nPosition, sDelimiter, and nInLinePosition give the location of the value of the information with respect to sKey on the web page. The vector, m_LocateValueVector (**2604**), contains the struct CLocateValueInfo (**2606**). The struct CLocateValueInfo (**2606**) contains information about the state of finding the information on the web page. The m_bKeyFound of the struct CLocateValuehnfo (**2606**) determines whether the key has been found. The m_bValueObtained of the struct CLocateValueInfo (**2606**) determines whether the value has been obtained. The m_nCounter of the struct CLocateValueInfo (**2606**) is used to determine the current data location with respect to the key in searching for the value of the information. There is a one to one correspondence between the two vectors. Thus, a struct CKeyValueInfo in m_KeyValueVector (**2600**) corresponds to a struct CLocateValueInfo in m_LocateValueVector (**2604**). Both vectors have the same number of elements. The vectors are used together to obtain information about the network printer from its web page.

FIG. **27** shows a flowchart for executing the searchDataFromHTML( ) function of CHTMLProcessor **2002** (FIG. **20**). A line from the web page of a network printer is passed into this function. Each line is searched for the keys and values of the information desired of the network printer. In steps **2702** and **2704**, vector iterators corresponding to the vectors m_KeyValueVector and m_LocateValueVector are set to the beginning of the vectors. A vector iterator points to an element in a vector. In step **2706**, one of the vector iterators is checked to see it is at the end of the vector. Since both vectors are of the same size, only one vector iterator need probably be checked. If the vector iterator is at the end of the vector, then the searchDataFromHTML( ) function is done in step **2708**.

In step **2710**, the m_bKeyFound member of CLocateValueInfo pointed to by the vector iterator for m_LocateValueVector is checked to determine if it is true. m_bKeyFound member of CLocateValueInfo determines if the sKey member of CKeyValueInfo pointed to by the vector iterator for m_KeyValueVector has been found in a previous line of the web page. If m_bKeyFound is not true, then step **2712** is performed. In step **2712**, the sKey member of CKeyValueInfo pointed to by the vector iterator for m_KeyValueVector is checked to determine if sKey exists in the line of the web page passed into the function. If sKey is not found in the line of the web page, then in step **2720**, the vector iterators for m_KeyValueVector and m_LocateValueVector are incremented to point to the next element in the vectors and the system goes on to perform step **2706**.

If sKey is found in the line of the web page in step **2712**, then in step **2714**, the m_bKeyFound member of CLocateValueInfo pointed to by the vector iterator for m_LocateValueVector is set to be true. Next, the nPosition, sDelimiter, and nInLinePosition members of CKeyValueInfo pointed to by the vector iterator for m_KeyValueVector are used to obtain the value corresponding to sKey from the line of the web page in step **2716**. If the value cannot be obtained from the current line of the web page, the m_nCounter of CLocateValueInfo is updated. m_nCounter keeps track of the data position from sKey in the web page, and subsequently the vector iterators for m_KeyValueVector and m_LocateValueVector are incremented to point to the next element in the vectors as identified in step **2720**. If the value is obtained from the line of the web page, then in step **2718**, the eStdEnum member of CKeyValueInfo corresponding to sKey and the value obtained are added to the map that contains all the information about the network printer. Also, m_bValueObtained member of CLocateValueInfo is set to be true prior to performing step **2722**.

If the m_bKeyFound member of CLocateValuehnfo pointed to by the vector iterator for m_LocateValueVector is true in step **2710**, then step **2722** is performed. The m_bValueObtained member of CLocateValueInfo pointed to by the

vector iterator for m_LocateValueVector is checked to see if it is true in step **2722**. m_bValueObtained member of CLocateValueInfo indicates if the value corresponding to sKey of CKeyValueInfo has been obtained from the line of the web page. If m_bValueObtained of CLocateValueInfo is false, then step **2724** is performed. The nPosition, sDelimiter, and nInLinePosition members of CKeyValueInfo and m_nCounter of CLocateValueInfo are used to obtain the value corresponding to sKey from the line of the web page in step **2724**. If the value corresponding to sKey cannot be obtained from the line of the web page, the m_nCounter of CLocateValueInfo is updated and step **2720** is processed next. However, if the value corresponding to sKey can be obtained, then step **2718** is processed next. Steps **2720** and **2718** are described above and therefore will not be repeated herein.

If the m_bValueObtained member of CLocateValueInfo in step **2722** is true, then the elements corresponding to the iterators are removed from m_KeyValueVector and m_LocateValueVector in step **2726** and subsequently step **2706** is performed.

As described above, the use of the two vectors to obtain the information allows all the data to be searched for in each line of the web page rather than searching the entire web page one data at a time. This eliminates the need to read the same web page from the network printer for each information that needs to be obtained from the web page.

FIG. **28** shows an exemplary schematic of the two vectors m_KeyValueVector (**2800**) and m_LocateValueVector (**2802**) and lines from a web page (**2804**) of a network printer. The lines of the web page (**2804**) are read in one line at a time from the network printer. The data elements that can be obtained from the lines are indicated in bold face. It will be appreciated that the information in the HTML tags of the web page do not contain the desired information about the network printers. It is the data elements from where the key and value of the information are to be obtained. For each line of the web page, each of the elements of the vectors m_KeyValueVector (**2800**) and m_LocateValueVector (**2802**) are used by the system to determine the key and value information. For the first line of the web page in this example, if m_bKeyFound for the first element in m_LocateValueVector (**2802**) is false, then the system searches for the string sKey of the first element in m_KeyValueVector (**2800**) in the first line. That is, the system will search for "Black" in the first line. Whether the system finds "Black" in the first line or not, the system goes to the next element in m_KeyValueVector (**2800**) and m_LocateValueVector (**2802**) and repeats the same steps for the next elements. All the elements in the vectors m_KeyValueVector (**2800**) and m_LocateValueVector (**2802**) would be checked to determine if sKey member of the struct CKeyValueInfo can be found in the first line.

In the exemplary schematic of FIG. **28**, it is not until line 3 of the web page (**2804**) that sKey, "Black" of the first element of m_KeyValueVector (**2800**) is found. Since sKey has been found, m_bKeyFound of the first element of m_LocateValueVector (**2802**) is set to true. The system then tries to obtain the value corresponding to sKey using nPosition, sDelimiter, and nInLinePosition of the first element of m_KeyValueVector (**2800**). nPosition is 2 for the first element of m_KeyValueVector (**2800**). This means that the value of the information is 2 data elements away from sKey, "Black". m_nCounter of the first element of m_LocateValueVector (**2802**) keeps track of the number of data elements encountered. Since there are no data elements after "Black", m_nCounter remains 0. The remaining two elements of the vectors are checked to see if the keys can be found. In line 4, since m_bKeyFound of the first element of m_LocateValueVector (**2802**) is true, the data elements are searched for in the line. Since no data elements are found, m_nCounter of the first element of m_LocateValueVector (**2802**) remains 0. Again the remaining two elements of the vectors are checked to see if the keys can be found.

One would note that, it is not until line 6 of the web page (**2804**) of FIG. **28** that another data element " " is found. m_nCounter of the first element of m_LocateValueVector (**2802**) is incremented to 1. Since nPosition is 2 for the first element of m_KeyValueVector (**2800**), the value of the information is not been reached. Again the remaining two elements of the vectors are checked to see if the keys can be found. In line 7 of the web page (**2804**) another data element "100%" is found. m_nCounter of the first element of m_LocateValueVector (**2802**) is incremented to 2. Since nPosition is 2 for the first element of m_KeyValueVector (**2800**), the value of the information is reached. With a value of "%" for sDelimiter and 0 for nInLinePosition for the first element of m_KeyValueVector (**2800**), the value corresponds to the string before "%". Thus, the value of the information is 100. Since the value of the information is obtained, the first element in each vector are removed from the vector leaving only two elements. The remaining two elements of the vectors are checked to see if the keys can be found. This process is repeated for each line of the web page (**2804**) until all the values for the information can be found. Using the two vectors allow all the information to be searched in each line of the web page irrespective of the vector containing one or more element.

FIG. **29** shows a sequence diagram for executing the getVendorModelID( ) of CHTTP_HTML (**2000**). This function returns the vendor model ID of the network printer. This function also populates the map structure m_VendorModelMap of CHTTP_HTML (**2000**) as described in FIG. **15**. The map structure contains all the network printers that will be monitored for its status information. This map structure provides information about the web pages of an accessed network printer and information about what to extract from those web pages. CHTTP_HTML (**2000**) calls setVendorModelID( ) of SupportInfoODBC (**1114**) package. This function sets up the SupportInfoODBC (**1114**) package to access information only related to a specific vendor and model of the network printer. CHTTP_HTML (**2000**) calls getWebPageInfo( ) of SupportInfoODBC (**1114**) package. This function returns the web page and a vector of CKeyValueInfo. The CKeyValueInfo provides information needed to extract status information from the web page. The web page and vector of CKeyValueInfo are placed into the map structure m_VendorModelMap. CHTTP_HTML (**2000**) calls getWebPageInfo( ) of SupportInfoODBC (**1114**) package multiple times until it returns false, in order to obtain all the information used to extract the status information from the web pages of a specific vendor and model of the network printer.

FIG. **30** shows the class diagram of the SupportInfoODBC (**1114**) package as shown in FIG. **11**. This package accesses the database to obtain information about the vendors and models of network printers supported by the system. SupportInfoODBC package obtains information from the database used to obtain information from the network printers' web pages. The CSupportInfoODBC (**3000**) class is the interface for this package and manages the other classes in this package to perform the following tasks. The CVendorModelInformationData (**3002**) class obtains information from the database used to determine the vendor and model of the network printer from one of its web pages. The CVendorModelAndUniqueIDsData (**3004**) class obtains information from the database used to determine the unique identifier of the network

printer from one of its web pages. The CKeyValueData (**3006**) class obtains information from the database used to obtain the status information from the web pages of the network printer. The CVendorModelWebPageData (**3008**) class obtains information from the database that determines what web pages are associated with the vendor and model of the network printers. The CVendorModelInformationTable (**3010**) class provides an interface to the table (VendorModelInformation table) in the support database that contains information used to determine the vendor and model of the network printer from one of its web pages. The CVendorModelAndUniqueIDsTable (**3012**) class provides an interface to the table (VendorModelAndUniqueIDs table) in the support database that contains information used to determine the unique identifier of the network printer from one of its web pages. The CKeyValueTable (**3014**) class provides an interface to the table (KeyValue table) in the support database that contains information used to obtain the status information from the web pages of the network printer. The CVendorModelWebPageTable (**3016**) class provides an interface to the table (VendorModelWebPage table) in the support database that contains information to determine what web pages are associated with the vendor and model of the network printers. CVendorModelInformationTable (**3010**), CVendorModelAndUniqueIDsTable (**3012**), CKeyValueTable (**3014**), and CVendorModelWebPageTable (**3016**) are all classes derived from CRecordset (**3018**) of the Microsoft Foundation Class (MFC) library.

FIG. **31** shows the sequence diagram for executing the getVendorModelID( ) of the HTTP_HTML (**1112**) package. This sequence of function calls populates the table structure of the HTTP_HTML (**1112**) package described in FIG. **14**. This table structure is used to obtain status information for specific vendors and models of network printers. This sequence of function calls in the sequence diagram is used to change the information that is stored in the database to an internal structure in the system. The information in the database may not be organized in a manner for the system to easily use the data. This is because the requirements of the database differs from that of the system. Therefore, it is preferred to access the information from the tables of the database and store the data in an internal structure that is convenient for the system to use. The sequence diagram of FIG. **31** is a method for changing the information obtained from database to an internal structure.

In FIG. **31**, HTTP_HTML (**1112**) calls setVendorModelID( ) of CSupportInfoODBC (**3000**). Then CSupportInfoODBC (**3000**) calls setVendorModelID( ) of CVendorModelWebPageData (**3008**). This function obtains from the database all the web pages associated with a vendor and model of the network printer. HTTP_HTML (**3000**) calls getWebPageInfo( ) of CSupportInfoODBC (**3000**). Then CSupportInfoODBC (**3000**) calls getWebPageAndID( ) of CVendorModelWebPageData (**3008**) to obtain a web page associated with the vendor and model of the network printer. CSupportInfoODBC (**3000**) calls setVendorModelWebID( ) of CKeyValueData (**3006**) to access the table in the database that contains all the status information that can be obtained from a specific web page of the network printer. CSupportInfoODBC (**3000**) calls getKeyValueInfo( ) of CKeyValueData (**3006**) to obtain information used to obtain the status information from the web page of the network printer. CSupportInfoODBC (**3000**) calls getKeyValueInfo( ) of CKeyValueData (**3006**) multiple times to get all the information used to obtain all the status information associated with the web page of the network printer. The sequence of calling getWebPageInfo( ) of CSupportInfoODBC (**3000**), getWebPageAndID( ) of CVendorModelWebPageData (**3008**), and setVendorModelWebID( ) and getKeyValueInfo( ) of CKeyValueData (**3006**) is repeated until getWebPageAndID( ) returns false. This calling sequence changes information obtained from two tables (KeyValue table and VendorModelWcbPage table) of the support database into information that can be stored in an internal table structure used to obtain all the status information from the web pages of a network printer of a specific vendor and model.

FIG. **32** shows a flowchart for executing the setVendorModelID( ) of CSupportInfoODBC. setVendorModelID( ) obtains all the web pages associated with a specific vendor and model of a network printer and its corresponding vendor model IDs from the table, VendorModelWebPage, of the support database and places it into a vector. In step **3202** a filter is specified corresponding to the range of vendor model IDs. The range of vendor model IDs corresponds to the web pages associated with a specific vendor and model of a network printer. By setting the filter, a table in the database preferably contains those entries in the table that satisfy the filter when it is opened. So all entries that have vendor model ID within the range of the vendor model ID of the filter will be included in the table. In step **3204**, the table of the support database is opened. In step **3206**, the system checks if the end of the table of the database is reached. If the end of the table is not reached, then the vendor model ID and the corresponding web page is placed into a pair structure and the pair structure is placed into a vector in step **3208**. If the end of the table is reached, the system performs the tasks set forth in step **3212** as described below. In step **3210**, the system moves to the next entry in the table of the database and then refers to step **3206** for iteration.

In step **3212**, an iterator for the vector containing the pairs of vendor model ID and web page is set to the beginning of the vector. In step **3214**, the table of the database is closed and the execution of setVendorModelID( ) is completed in step **3216**. The vector is used in getWebPageInfo( ) of CSupportInfoODBC as described in FIG. **33**.

FIG. **33** shows the flowchart for executing the getWebPageInfo( ) of CSupportInfoODBC. This function returns the web page of a given vendor and model of a network printer and status information that can be obtained from the web page. In step **3302**, the web page and the vendor model ID for a specific vendor and model of the network printer are obtained from the vector as described in FIG. **32**. In step **3304**, the system determines if there are any more web pages and vendor model IDs for the network printer. If no more web pages or vendor model IDs remain, then execution of the getWebPageInfo( ) of CSupportInfoODBC is completed in step **3320**. However, if more web pages or vendor model IDs are present, then the table, KeyValue, of the support database is opened using the vendor model ID of the network printer as the filter in step **3306**. The filter is set to the vendor model ID so that when the table of the database is opened, only those entries in the table with the same vendor model ID exist in the table. Step **3308** checks to determine if the table is empty. If it is, step **3302** is subsequently executed. However, if the table is not empty, step **3310** is executed.

In step **3310** of FIG. **33**, information about status information that need to be extracted from the web page of the network printer is obtained from the table, VendorModelWebPage, of the support database. The information is placed into the vector in step **3312**, and the system moves to the next entry in the table of the database in step **3314**. The system determines if it is at the end of the table of the database in step **3316**. If it is not, the system executes step **3310**. However, if

the end of the table of the database is reached, the table of the database is closed in step **3318** and getWebPageInfo( ) of CSupportInfoODBC is completed in step **3320**.

The present invention enables monitoring of the various devices in a multi-vendor environment and further facilitates retrieving and displaying detailed information in a user-comprehensible or user-friendly manner even without having specific private management information base (MIB) information. In addition, the stored monitored information can be sent out through FTP or e-mail as described in co-pending applications that are incorporated herein by reference.

Although the present invention is shown to include a few devices, that require monitoring, connected to network, it will be appreciated that more than a few devices may be connected to the network without deviating from the spirit and scope of the invention. Also, the present invention may also be applied in a home environment where various devices need to be monitored and controlled.

The present invention enables the monitoring of the various devices in a multi-vendor environment and further facilitates retrieving and displaying detailed information in a user-comprehensible or user-friendly manner even without having specific private management information base (MIB) information.

The controller of the present invention may be conveniently implemented using a conventional general purpose digital computer or a microprocessor programmed according to the teachings of the present specification, as will be apparent to those skilled in the computer art. Appropriate software coding can readily be prepared by skilled programmers based on the teachings of the present disclosure, as will be apparent to those skilled in the software art. The invention may also be implemented by the preparation of application specific integrated circuits or by interconnecting an appropriate network of conventional component circuits, as will be readily apparent to those skilled in the art.

The present invention includes a computer program product which is a storage medium including instructions which can be used to program a computer to perform a process of the invention. The storage medium can include, but is not limited to, any type of disk including floppy disks, optical discs, CD-ROMs, and magneto-optical disks, ROMS, RAMs, EPROMs, EEPROMs, magnetic or optical cards, or any type of media suitable for storing electronic instructions.

Obviously, numerous modifications and variations of the present invention are possible in light of the above teachings. It is therefore to be understood that within the scope of the appended claims, the invention may be practiced otherwise than as specifically described herein.

What is claimed is:

1. In a communication system having one or more monitored image output devices communicatively coupled to a monitoring system, a database having information related to the one or more monitored image output devices, a method of obtaining and maintaining, in the monitoring system, information related to the monitored image output devices comprising:

a) accessing the one or more monitored image output devices and obtaining therefrom a first model name and a first vendor name of the one or more monitored image output devices by using a first IP address;

b) storing configuration information corresponding to each of the one or more monitored image output devices, said configuration information including a second vendor name, a second model name and a second IP address of the one or more monitored image output devices;

c) updating the configuration information to include the first model name of the one or more monitored image output devices when the first model name is different than the second model name and the first IP address is the same as the second IP address;

d) updating the configuration information to include the first vendor name of the one or more monitored image output devices when the first vendor name is different than the second vendor name and the first IP address is the same as the second IP address;

e) enabling the monitoring system to access the database in order to retrieve information related to the monitored image output devices;

f) populating a first data structure with information retrieved from the database;

g) determining if a monitored image output device is supported by the monitoring system using information from the database;

h) establishing communication with the monitored image output device in order to obtain status information of the monitored image output device if the monitored image output device is determined to be supported by the monitoring system;

i) accessing a web page in an HTML format from a web server stored in the respective monitored image output devices so as to obtain a line from the web page; and

j) parsing, without human interaction, the line from the web page to obtain the status information in accordance with information included in the first data structure, said parsing includes searching the line from the web page for a key included in the first data structure, and the information included in the first data structure includes a location of the status information within the web page with respect to a location of the key in the web page,

wherein step h) is performed using an HTTP protocol.

2. The method according to claim **1**, further comprising:

storing information related to vendors and models of the monitored image output devices in said database.

3. The method according to claim **1**, wherein:

step f) further comprises retrieving information about vendors, models, and information to obtain unique identifiers of monitored image output devices.

4. The method according to claim **1**, further comprising:

storing information about vendors of monitored image output devices supported by the monitoring system; and

storing information that is used for obtaining a model of a monitored image output device from a web page of the monitored image output device.

5. The method according to claim **1**, further comprising:

populating the retrieved information from the database into a plurality of fields of said first data structure, the first data structure including:

a first field having information related to a vendor of the monitored image output device;

a second field having a reference to a web page having model information of the monitored image output device; and

a third field having information that is used to obtain model information from a web page of the monitored image output device.

6. The method according to claim **1**, wherein

the step of accessing further comprises

periodically accessing the web page, and

the step of parsing further comprises

parsing the line to obtain one of the status information, model information, and vendor information, the line being a line of HTML script obtained without displaying the web page.

7. A method of obtaining and maintaining information about one or more monitored image output devices in a monitoring system, comprising:

a) accessing the one or more monitored image output devices and obtaining therefrom a first model name and a first vendor name of the one or more monitored image output devices by using a first IP address;

b) storing configuration information corresponding to each of the one or more monitored image output devices, said configuration information including a second vendor name, a second model name and a second IP address of the one or more monitored image output devices;

c) updating the configuration information to include the first model name of the one or more monitored image output devices when the first model name is different than the second model name and the first IP address is the same as the second IP address;

d) updating the configuration information to include the first vendor name of the one or more monitored image output devices when the first vendor name is different than the second vendor name and the first IP address is the same as the second IP address;

e) storing updated vendor name and undated model name of the monitored image output devices in a database;

f) enabling a monitoring system to access the database in order to retrieve the stored vendor name and model name;

g) populating a first data structure with the vendor name retrieved from said database;

h) populating a second data structure with the model name if no further vendor information remains to be populated in the first data structure;

i) determining if a monitored image output device is supported by the monitoring system using information from the database;

j) establishing communication with the monitored image output device to obtain status information of the monitored image output device if the monitored image output device is determined to be supported by the monitoring system;

k) accessing a web page in an HTML format from a web server stored in the respective monitored image output devices so as to obtain a line from the web page; and

l) parsing, without human interaction, the line from the web page to obtain the status information in accordance with information included in the first data structure, said parsing includes searching the line from the web page for a key included in the first data structure, and the information included in the first data structure includes a location of the status information within the web page with respect to a location of the key in the web page,

wherein step h) is performed using an HTTP protocol.

8. The method according to claim **7**, wherein step g) further comprises:

populating a sub-data structure of said first data structure with a vendor name of a monitored image output device, a web page having a model name of the monitored image output device, and information for obtaining the model name from the web page.

9. The method according to claim **8**, further comprising:

adding the sub-data structure of the first data structure to a data structure vector;

adding the model name and the sub-data structure of the first data structure to a data structure map; and

adding the vendor name and the data structure map to a data structure representing a vendormodel ID map.

10. The method according to claim **9**, further comprising:

i) using an entry from the data structure vector to access the web page of the monitored image output device;

ii) identifying a vendor of the accessed monitored image output device as vendor name in the sub-data structure of the first data structure;

iii) obtaining model name of the monitored image output device from the web page using information in the sub-data structure of the first data structure; and

iv) comparing the model name with information stored in the second data structure in order to determine if the model name of the monitored image output device is supported by the monitoring system.

11. The method according to claim **10**, further comprising:

iterating steps i) to iv) for all elements of the data structure vector if the monitoring system cannot access the web page or if the model name cannot be obtained from the web page; and

determining that the monitored image output device is not supported by the monitoring system if the monitoring system is unsuccessful in obtaining the vendor and model name of the monitored image output device after iterating through all elements of the data structure vector.

12. The method according to claim **7**, wherein

the step of accessing further comprises

periodically accessing the web page, and

the step of parsing further comprises

parsing the line to obtain one of the status information, model information, and vendor information, the line being a line of HTML script obtained without displaying the web page.

13. In a communication system having one or more monitored image output devices communicatively coupled to a monitoring system, a database having information related to the one or more monitored image output devices, an apparatus for obtaining and maintaining in a monitoring system information related to the monitored image output devices comprising:

means for accessing the one or more monitored image output devices and obtaining therefrom a first model name and a first vendor name of the one or more monitored image output devices by using a first IP address;

means for storing configuration information corresponding to each of the one or more monitored image output devices, said configuration information including a second vendor name, a second model name and a second IP address of the one or more monitored image output devices;

means for updating the configuration information to include the first model name of the one or more monitored image output devices when the first model name is different than the second model name and the first IP address is the same as the second IP address, and updating the configuration information to include the first vendor name of the one or more monitored image output devices when the first vendor name is different than the second vendor name and the first IP address is the same as the second IP address;

means for enabling the monitoring system to access the database in order to retrieve information related to the monitored image output devices;

means for populating a first data structure with information retrieved from the database;

means for determining if a monitored image output device is supported by the monitoring system using information from the database;

means for establishing communication with the monitored image output device using an HTTP protocol in order to obtain status information of the monitored image output device if the monitored image output device is determined to be supported by the monitoring system;

means for accessing a web page in an HTML format from a web server stored in the respective monitored image output devices so as to obtain a line from the web page; and

means for parsing, without human interaction, the line of the web page to obtain the status information in accordance with information included in the first data structure, said means for parsing searches the line from the web page for a key included in the first data structure, and the information included in the first data structure includes a location of the status information within the web page with respect to a location of the key in the web page,

wherein said means for establishing uses an HTTP protocol.

14. The apparatus according to claim **13**, further comprising:

means for storing information related to vendors and models of the monitored image output devices in said database.

15. The apparatus according to claim **13**, wherein means for populating further comprises:

means for retrieving information about vendors, models, and information to obtain unique identifiers of monitored image output devices.

16. The apparatus according to claim **13**, further comprising:

means for storing information about vendors of monitored image output devices supported by the monitoring system; and

means for storing information that is used for obtaining a model of the monitored image output device from a web page of the monitored image output device.

17. The system according to claim **13**, wherein

the means for accessing further comprises

means for periodically accessing the web page, and

the means for parsing further comprises

means for parsing the line to obtain one of the status information, model information, and vendor information, the line being a line of HTML script obtained without displaying the web page.

18. An apparatus for obtaining and maintaining information about one or more monitored image output devices in a monitoring system, comprising:

means for accessing the one or more monitored image output devices and obtaining therefrom a first model name and a first vendor name of the one or more monitored image output devices by using a first IP address;

means for storing configuration information corresponding to each of the one or more monitored image output devices, said configuration information including a second vendor name, a second model name and a second IP address of the one or more monitored image output devices;

means for updating the configuration information to include the first model name of the one or more monitored image output devices when the first model name is different than the second model name and the first IP address is the same as the second IP address;

means for updating the configuration information to include the first vendor name of the one or more monitored image output devices when the first vendor name is different than the second vendor name and the first IP address is the same as the second IP address;

means for storing updated vendor name and updated model name related to the monitored image output devices in a database;

means for enabling a monitoring system to access the database in order to retrieve the stored vendor name and vendor model name;

means for populating a first data structure with the vendor name retrieved from said database;

means for populating a second data structure with the model name if no further vendor information remains to be populated in the first data structure;

means for determining if a monitored image output device is supported by the monitoring system using information from the database;

means for establishing communication with the monitored image output device to obtain status information of a monitored image output device if the monitored image output device is determined to be supported by the monitoring system;

means for accessing a web page in an HTML format from a web server stored in the respective monitored image output devices so as to obtain a line from the web page; and

means for parsing, without human interaction, the line of the web page to obtain the status information in accordance with information included in the first data structure, said means for parsing searches the line from the web page for a key included in the first data structure, and the information included in the first data structure includes a location of the status information within the web page with respect to a location of the key in the web page,

wherein said means for establishing uses an HTTP protocol.

19. The apparatus according to claim **18**, wherein

the means for accessing further comprises

means for periodically accessing the web page, and

the means for parsing further comprises

means for parsing the line to obtain one of the status information, model information, and vendor information, the line being a line of HTML script obtained without displaying the web page.

* * * * *