Feb. 12, 1957 W. B. HARRISON 2,781,506

FLAMMABLE VAPOR DETECTORS

Filed Jan. 14, 1955

Fig. 1.

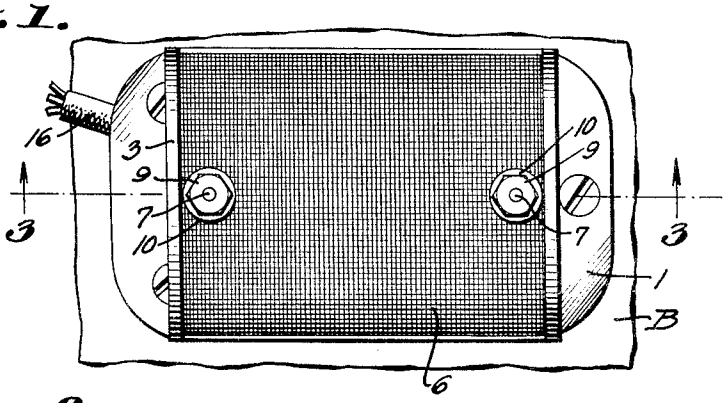

Fig. 2.

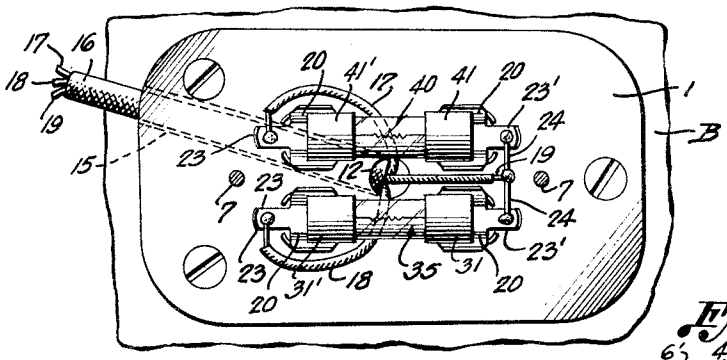

Fig. 6.

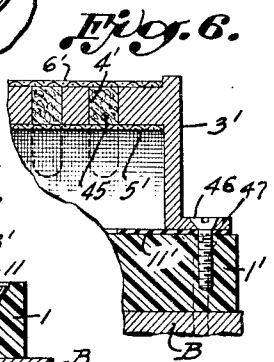

Fig. 3.

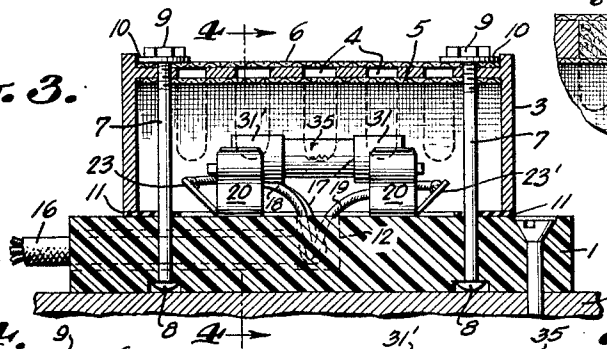

Fig. 4.

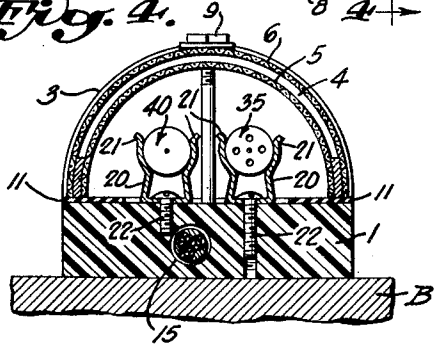

Fig. 5.

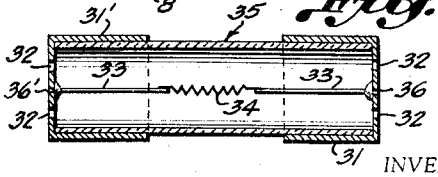

INVENTOR

WILLIAM B. HARRISON

BY Samuel Klomf

ATTORNEY

United States Patent Office

2,781,506

Patented Feb. 12, 1957

2,781,506

FLAMMABLE VAPOR DETECTORS

William B. Harrison, Shadyside, Md.

Application January 14, 1955, Serial No. 481,932

7 Claims. (Cl. 340—237)

This invention relates to protective fume detectors and particularly detectors of the electrical resistance type designed to indicate the presence of dangerous flammable vapors and gaseous mixtures.

It is the object of the present invention to provide a fume detector assembly which is compact, rugged and reliable in operation, economical in construction, and capable of convenient interchangeability and maintenance.

The invention is directed primarily to the class of electrical resistance detectors consisting of a pair of resistances of the same order of magnitude, one of which is sealed from the ambient atmosphere, while the other is exposed to the surrounding atmosphere. These resistances are inserted in the corresponding arms of a Wheatstone bridge, which bridge is balanced under normal conditions, but when a predetermined condition arises which affects only the resistance which is exposed to the atmosphere, the bridge becomes unbalanced, and actuates a suitable alarm or control element to indicate the critical condition which has arisen. The condition which affects the variable resistance may be the result of many different variable factors, such as the content of poisonous fumes in the air, the moisture content thereof, or the presence of a dangerous quantity of flammable or combustible vapors which might cause an explosion. The instant invention is concerned primarily with the last-mentioned condition, and the objective sought is a reliable fume detector which is responsive to the presence of combustible vapors in the atmosphere of the type particularly applicable to a safety system as disclosed in my co-pending application, Serial No. 403,499, filed January 12, 1954, or as disclosed in the patent to Willenborg, No. 2,533,339. This invention presents an improvement over the catalytic-type resistors disclosed in said last-mentioned patent and exemplified by platinum, palladium, rhodium and alloys of these metals.

The present invention seeks to overcome the occasional failure of the exposed resistance device to detect the critical percentage of combustible vapors in the atmosphere as a result of the exposed resistance having become coated by lead and other oxides arising from the vaporization of petroleum fuels, for example, tetra-ethyl lead in high-octane gasolines. This defect is cured by the instant invention by maintaining the resisitance element at a glowing temperature in order that it is capable of consuming these deleterious oxides as they arise and come in contact with the exposed resistor. However, this glowing resistor gives rise to the possibility of explosions of the contaminated atmosphere by the ignition of the latter by the incandescent resistor. Therefore, it is the object of the invention to exclude such possibilities of explosion by enclosing the glowing resistor in a specially designed casing which permits a sufficient amount of the ambient atmosphere to come into contact with the resistor in order to obtain the comparative control which is necessary to actuate the control system as a result of the relative contrast with the sealed resistor, and yet to preclude the possibilities of explosion arising from such contact.

This critical control is achieved by providing a plurality of small openings in the ends of the tube enclosing the glowing resistor, which limits the amount of the atmosphere in contact therewith. Furthermore, the difference in temperature at the interior of the glass tube and the cooler ends give rise to a flue or chimney effect which induces the passage of air through the tube without causing any explosions.

As an additional factor of safety, the detector assembly is enclosed within a double walled housing of metal screening which positively excludes the possibility of explosion at the detector assembly by the glowing resistance element, no matter how high or volatile may be the vapor fractions of the fuels present in the system.

It is a further object of the invention to provide a rugged mounting of insulating material for the fume detector fitted with spring clips to accommodate the sealed and the open cartridge resistors therein, which may be inserted and removed quickly and easily for the purpose of convenient maintenance and replacement.

Other objects and purposes will appear from the detailed description of the invention following hereinafter, taken in conjunction with the accompanying drawing, wherein

Fig. 1 is a plan view of the complete fume detector as installed;

Fig. 2 is a plan view of the fume detector with the protective cover removed;

Fig. 3 is a vertical sectional view along line 3—3 of Fig. 1;

Fig. 4 is a vertical sectional view along line 4—4 of Fig. 3;

Fig. 5 is a transverse sectional view of the resistor cartridge exposed to the atmosphere; and

Fig. 6 is a partial vertical sectional view of a modified protective cover.

As shown in the drawing, the fume detector is a compact assembly comprising a base 1 of insulating material such as Bakelite or other plastic, which may be affixed to a support B in the bilge of a boat or in any other space or enclosure wherein combustible fumes might be present, and an indication of which, for the purpose of exercising a control function, is desired.

A cover 3, which may be of cast metal of semi-cylindrical contour, encloses the sealed and open resistance cartridges 35 and 40 and serves to protect the assembly against mechanical injury. A plurality of openings 4 extend circumferentially in the peripheral surface of the cover and both the inner and outer surfaces of the cover are lined with metallic screens 5 and 6 which are of a mesh to permit the entry of the vapors into the cover, but which are capable of protecting the exterior against any explosions in consequence of the incandescent resistor on the interior. The layers 5 and 6 may each consist of single or double layers of No. 50 Monel metal screening. The bolts 7, extending upwardly from the heads 8 at the bottom of the base 1 extend through openings in the top of the housing, and nuts 9 threaded on the ends of the bolt 7 in conjunction with washers 10, serve to reliably interconnect the base with the cover. Nevertheless, the cover may be easily removed for access to the resistors by removing the nuts 9 and washers 10. In order to obtain a tight enclosure of the flammable vapor detector within the casing, a gasket 11, of neoprene rubber, is disposed between the base 1 and bronze casting 3.

The base 1 of the detector is provided with a lateral bore 15 through which extends a cable 16 carrying three wires 17, 18 and 19 through a central opening 12 in the top of the base. A pair of bifurcated clips 20 are aligned on one side of the opening 12, while another pair of identical clips are aligned and laterally disposed on the opposite side of the opening 12. The clips 20

may be affixed to the plastic base 1 by means of threaded bolts 22 or in any other manner well known in the art. Each of the clips is provided with pairs of spring arms 21 adapted to embrace a metal ferrule constituting the ends of the cartridge resistances 35 and 40. The clips at one end of the unit are provided with end projections 23 for connection thereto of the wires 17 and 18. The clips at the opposite ends of the unit are provided with projections 23' for the purpose of connecting a jumper wire 24 therebetween to which is connected the conductor 19 representing the diagonal terminal of the Wheatstone bridge to which the unit is adapted to be connected by means of cable 16, as disclosed in the above-mentioned application and patent.

Fig. 5 shows an enlarged view of the resistor cartridge open to the atmosphere and designed to exclude possibilities of explosion of the latter despite the relatively high temperature at which the resistance wire 34 is maintained. This resistance wire 34 is of pure platinum and of a diameter of 0.004 having an initial length of $15/16$" before coiling of the same on a mandrel of 0.02" diameter and having a resistance of 0.5 ohm in cold condition. The ends of the platinum coil are welded to two pieces of nickel ribbon 33 having dimensions of 0.006" by 0.032". One of the free ends of the nickel ribbon 33 is soldered to the end of ferrule 31, which preferably is of silver-plated brass, at a central opening 36 thereat, and the same is inserted into the end of a lead glass tube 35 having an internal diameter of 0.3" and of a length of 1¼ which is sealed thereto by a plastic cement capable of withstanding high temperatures. In addition to the central opening in ferrule 31, which is closed off by the solder connection 36, a plurality of openings 32 are disposed in the end of the ferrule to control the amount of the ambient atmosphere passing through the cartridge. These openings, which may have a diameter of $1/16$" or 0.063" are preferably spaced equidistantly around the center of the end ferrule and four of such holes have proven to give the desired reliable results with utmost safety. The opposite nickel ribbon 33 is passed through the opposite opening 36' in the ferrule 31' and the latter, also of silver plated brass, is cemented to the glass tube with a heat resistant plastic composition. The nickel ribbon 33 is withdrawn from the central opening to effect an opening of the spiral turns of the platinum wire 34 and then the ribbon 33 is sealed off at opening 36'. A plurality of openings 32 are provided in the end face of the silver plated brass cap 31' similarly to such openings in the brass cap 31.

The size of the openings 32 in the end caps 31 and 31' have been found to be critical to attain an adequate sampling of the ambient atmosphere while excluding the possibility of explosion by the incandescent resistance 34. Thus, it is important that the exposed cartridge tube have a restricted passage of air therethrough, corresponding approximately to ¼ to ⅛ of the cross-section of the tube and preferably this restriction of the air to approximately ⅙ of the cross-sectional area of the tube.

The mounting of the cartridge 35 enclosing the exposed resistor 34 within the clips 20 also results in a temperature gradient between the ends of the cartridge and the interior thereof whereat is disposed the glowing resistor 34. This temperature differential results in the inducement of convection or chimney effects through the tube which further precludes the possibilities of explosion. Of course, an additional factor of safety is provided by the protective housing including the multiple layers of screened metal thereon.

The fixed resistance cartridge 40 may be formed of the same size neon sign glass tubing of lead glass and is fitted with the silver plated brass caps 41 and 41' having only single central openings in their ends whereat are soldered the terminals of the nickel ribbons 33, following the adjustment of one end to obtain a resistance for the unit which is comparable to the resistance of the

exposed cartridge. While variations in resistance are permissible, since compensation for such variations are made upon the installation thereof and the balancing of the Wheatstone bridge in which such resistances are disposed by means of an adjusting potentiometer, it is desirable to adjust both the sealed and exposed resistances to substantially the same value. Furthermore, it is preferable to form the sealed resistance of the same material as the exposed resistance in order to obtain identical compensation effects resulting from variations in temperature of the ambient atmosphere.

When the exposed resistance 34 is maintained at an incandescent temperature of at least 825° F., the oxides which normally become coated upon such platinum resistance wires are burned off to insure the effectiveness of the detector for long periods of time. Neverthless, the controlled access of the atmosphere to this incandescent resistor precludes any danger of explosion in consequence of such incandescence. In its heated state in the Wheatstone bridge circuit the resistor approximates a value of 18–20 ohms.

The protective cover 3 shown in the embodiment described above excludes any possibilities of explosion resulting from the flammable vapors emanating from conventional hydrocarbon fuels of whatever octane rating they may be. In order to adapt the protective system to the atmospheres wherein more volatile explosive gases may be present, such as hydrogen or acetylene, the wall of the cover 3' may be increased in thickness as shown in Fig. 6 and the spaces in the opening 4' may be filled with fiberglass wool 45 to supplement the action of the internal and external protective metal screens 5' and 6', respectively. Instead of fastening the cover to the base by means of bolts extending through the cover, flanges 47 are provided in the end walls of the cover for attachment to the base 1' by means of threaded bolts 46, and the sealing gasket 11' is shaped correspondingly to fit the flanges 47.

The fume detector described above may also serve the dual function of a water leak detector when the same is installed in the bilge of a boat. The leaking water may enter the holes 32 in the exposed cartridge 35 to cool the filament below its normal operating temperatures, which in turn unbalances the Wheatstone bridge and operates the relay circuit controlled thereby. The cooling of the exposed resistance exercises a control of the resulting unbalance in a reverse direction from that when the atmosphere is fouled with flammable vapors which causes an increase in resistance of the exposed resistance 34.

While I have described my invention as embodied in a specific form and as operating in a specific manner for purpose of illustration, it should be understood that I do not limit my invention thereto, since various modifications will suggest themselves to those skilled in the art without departing from the spirit of my invention, the scope of which is set forth in the annexed claims.

I claim:

1. A fume detector comprising a pair of resistance units of substantially the same order of magnitude, a tube having closed ends sealing one of the resistance units from the ambient atmosphere, and a tube with the second resistance unit disposed centrally and co-axially thereof having ends provided with openings of limited area arranged peripherally of the centers of the ends to permit a controlled passage of the ambient atmosphere to the second resistance unit in encompassing relation thereto, said last-mentioned resistance unit being adapted to be heated to a glowing temperature for consuming fouling components in the atmosphere thereby to prolong the effective life of said last-mentioned unit and said openings being sufficiently small to exclude access of such volume of the atmosphere in contact therewith as will effect an explosion of air mixtures contaminated with explosive components.

2. A fume detector as set forth in claim 1 wherein said

second resistance unit comprises a helically wound wire of platinum of short length in which the individual turns are spaced from each other and which is adapted to be heated to glowing temperature for continually consuming the deteriorative oxide deposits accumulating thereon from the gas-laden atmosphere.

3. An electrical resistance detector comprising an insulating tube having metallic ends provided with openings of limited area to permit a controlled passage of the ambient atmosphere to the resistance unit, said resistance unit formed of a short length of coiled platinum wire with spaced turns, the end turns being affixed to nickel conductors and the free ends of which are soldered to the centers of the metallic ends, said platinum wire adapted to be heated to a glowing temperature ranging in the vicinity of 825° F. to 850° F. for consuming fouling components in the atmosphere thereby to prolong the effective life of said resistance unit, and said openings being arranged peripherally of said centers and of the order of 1/16" in diameter to exclude access of such volume of the atmosphere in contact therewith as will effect an explosion of air mixtures contaminated with flammable vapor components.

4. A fume detector comprising a supporting block of insulating material, two pairs of aligned resilient clips laterally spaced from each other and mounted on said supporting block, a pair of resistance units each enclosing a resistor of substantially the same order of magnitude detachably mounted in said resilient clips, said resistance units comprising a glass tube having closed ends sealing one of the resistors from the ambient atmosphere, a second tube having ends perforated by small openings representing in their entirety a fractional part of the cross-sectional area of said last-mentioned tube and mounting the resistor therebetween for contact with a controlled quantity of the ambient atmosphere passing through said second tube, said last-mentioned resistor being disposed centrally and co-axially within said second tube and adapted to be heated to a glowing temperature for consuming fouling components in the atmosphere passing therethrough and thereby prolonging the effective life of said resistor, and said openings being sufficiently small to exclude access of a sufficient volume of air in contact

therewith as will effect an explosion of air mixtures contaminated with flammable vapor components.

5. A fume detector comprising a supporting block of insulating material, two pairs of aligned resilient clips laterally spaced from each other and mounted on said supporting block, a pair of resistance units each enclosing a coiled resistor of platinum wire of substantially the same order of magnitude detachably mounted in said resilient clips, said resistance units comprising a glass tube having closed metallic ends sealing one of the resistors from the ambient atmosphere, a second glass tube having metallic ends perforated by small openings representing in their entirety a fractional part of the cross-sectional area of said last-mentioned tube and mounting the coiled platinum wire resistor therebetween for contact with a controlled quantity of the ambient atmosphere passing through said second tube, said last-mentioned resistor being disposed centrally and co-axially within said second tube and adapted to be heated to a glowing temperature ranging from 825° F. to 850° F. for consuming fouling components in the atmosphere passing therethrough and thereby prolonging the effective life of said resistor, and said openings being arranged peripherally of the center of said tube and of sufficiently small size to exclude access of a sufficient volume of air in contact therewith as will effect an explosion of air mixtures contaminated with flammable vapor components.

6. A fume detector as set forth in claim 5 wherein the small openings in the ends of the exposed resistance unit amount in their aggregate to 1/4 to 1/8 of the cross-sectional area of the glass tube.

7. A fume detector as set forth in claim 4 including a detachable metal cover overlying said block and enclosing said resistance units, said cover having a plurality of openings therein and sheets of metal screening on the interior and exterior of said cover overlying said openings.

References Cited in the file of this patent

UNITED STATES PATENTS

2,231,166	Knoedler	Feb. 11, 1941
2,533,339	Willenborg	Dec. 12, 1950